NEO WAVE®

Remote IO

N-Series

User Manual

NEO WAVE

Remote IO-C Series

Version

Date	Version	Content	Author
2020-02-20	V1.00	Release version	CCL
2020-03-05	V1.01	Updated ND-8031	YZJ/CCL
2020-03-19	V1.02	Updated ND-8031	CCL
2020-04-15	V1.03	Updated ND-8033 EtherCAT,NT-2228,NT-2718,NT-3158、NT-3713,NT-3804,NT-5800,NT-7221	YZJ/CCL
2020-05-29	V1.04	Updated ND-8032/ND-8033	CCL
2020-07-07	V1.05	Updated NT-5321	CCL
2020-07-09	V1.06	Updated ND-8011, ND-8012	CCL
2020-12-13	V1.12	Updated ND-8034, NT-4154, NT-4158	CCL
2021-10-08	V1.13	Updated NT-124H, NT-222H, NT-3258, NT-3808, NT-5102, NT-5112, NT-5122, NT-5142	CCL
2021-11-15	V1.14	Updated ND-8032-L	CCL
2022-04-02	V1.15	Updated ND-8021	CCL
2022-04-18	V1.16	Updated NT-1218 and NT-3168 Modify the external DI DO wiring circuits	CCL
2022-06-01	V1.17	Updated NT-5801 and NT-7220	CCL
2023-02-15	V1.18	Updated NT-1228 and NT-3268	CCL
2023-06-30	V1.19	UpdatedCT-2738, NT-2754, NT-3134, NT-3234, NT-3723, NT-3734, NT-3844, NT-3848, NT-5331, NT-730F, NT-731F, NT-732F, NT-7339, NT-7346	CCL
2023-08-14	V 1.23	Updated NT-5112 sub-module and NT-2218	XWL

Ownership rights information

Disclaimer

This document is only intended to assist the reader in using the products, and the company shall not be responsible for any loss or error caused by the use of the information in this document.
The product and text described in this document are under constant development and refinement. **NeoWave Co.,Ltd**. has the right to modify this document without notifying users.

Software download

please visit our website **www.neowave.tech** or contact us at **info@neowave.tech**

Content

1 Product Overview

Remote IO system consists of network adapter module and extended IO module. The network adapter module controls fieldbus communication and it realizes communication link with host station controller or host computer software.

The extended IO module controls the connection with the input and output sensors in the field. At first the Input IO module collects the field signals and sends it to the network adapter through the internal bus. Secondly the controller reads and processing data from the adapter through the field bus, and it writes the output data into the network adapter, then the network adapter could write the output data into the output IO module via the internal bus, so the field equipment control could be realized.

According to the communication interface of the controller system, the network adapter could select the corresponding bus module and mainstream industrial communication protocols including Modbus, Profibus-DP, Profinet, EtherCAT, EtherNet/IP, CANsopen, CC-Link, PowerLink, etc. And there are 6 categories of extended IO modules such as: digital input module, digital output module, analog input module, analog output module, special module, hybrid IO module, etc.

The network adapter and the extended IO module could be freely combined according to the field requirements, and it could achieve lower cost with the Remote IO module when the project requires more data points.

1.1 Module Feature

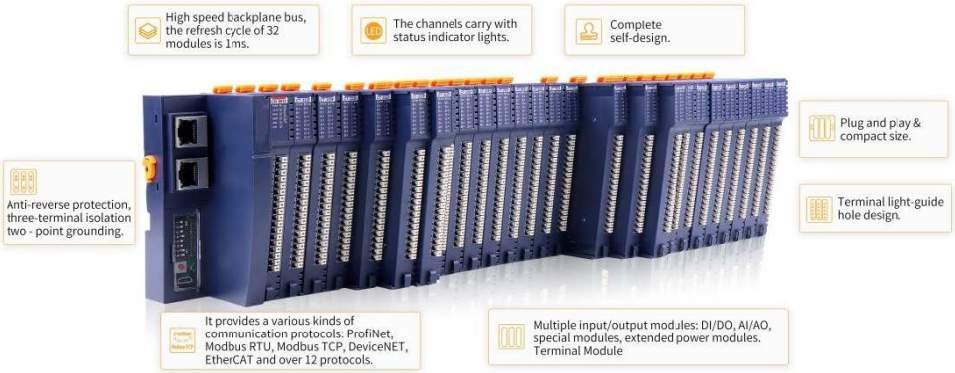

1.2 Module Layout

The NeoWave- N series is a remote I/O module. The adapter module lies on the far left, and on the right are extended I/O modules.

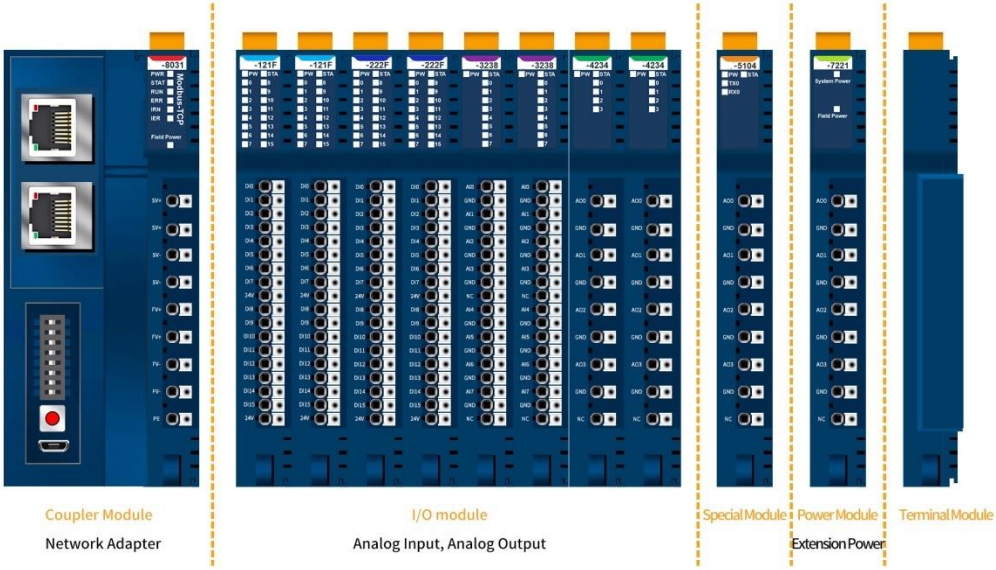

1.3 LED Indicators

The user can easily check the power state of adapter and I/O module, I/O module operating state, and the number of I/O channels though LED state. And the detailed indicator state should refer to the related adapter or IO modules.

1.4 Ground Protection

There is one metal Spring sheet on the back of the module, which is used for effective grounding with the guide rail. The metal spring sheet and the adapter PE (protective earthing) are connected internally.

1.5 Wiring

Use push-in method to connect single-wire or crimp terminal wires without any other tools. Users can save wiring time and ensure a safe operation regardless of wiring experience.

The module equips with a wiring fixed end for cable harness, which is used to fix the cable when the IO module is wired with multiple cables.

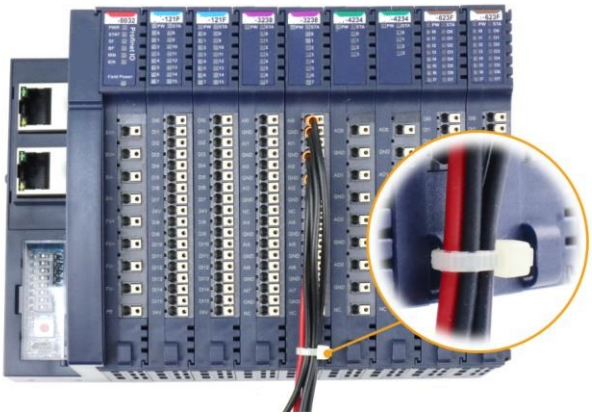

1.6 Installation and Removal

DIN-Rail Lock could be safely and reliably installed on 35 mm DIN-Rail. There is a manual closure buckle on the upper side of all modules for locking, and a manual buckle is on the left side of the adapter for locking the guide rail.

When the module is removed, it needs to manually unlock the guide rail on the upper side of the module. For the adapter module, you also need to unlock the left rail buckle counterclockwise.

1.7 Installation Size

2 BUS Adapter & Network Adapter

ND-8011 Modbus-RTU Bus Adapter

1 Module Overview

ND-8011 Modbus-RTU bus adapter supports standard Modbus-RTU communication, it supports function code of 01/02/03/04/05/06/15/16/23, and this device could monitor the IO module communication state in real time.

2 Technical Parameter

Adapter Hardware Parameter	
System Power	Nominal:24Vdc, Range: 9-36Vdc Reverse Protection: YES
Power Consumption	30mA@24Vdc
Internal Bus Supply Current	Max：2.5A@5VDC
Isolation	System Power to Field Power Isolation
Power Supply	Nominal:24Vdc, Range:22-28Vdc
Field Power Current	Max. DC 8A
IO Modules Supported	32 pcs
Wiring	Max.1.0mm² (AWG 17)
Mounting Type	35mm DIN-Rail
Size	115*51.5*75mm
Weight	130g
Environment Specification	
Operation Temperature	-40~85℃
Operation Humidity	5%-95% (No Condensation)
Ingress Protection Rating	IP20
Modbus-RTU Parameter	
Protocol	Modbus-RTU/ASCII
Function Code	01 / 02 / 03 / 04 / 05 / 06 / 15 / 16
Baud Rate	2400~115200bps
Station No.	1~63(Dial-code switch configuration),64~247(Software configuration)
Interface	5 Pin screw terminal
Data Bits	7, 8
Parity Checking	None, Even, ODD
Stop Bit	1，2
Max. bus length	1200m（RS485，2400 baud rate）
Terminal resistance and offset resistance	DIP switch configuration

3 Hardware Interface

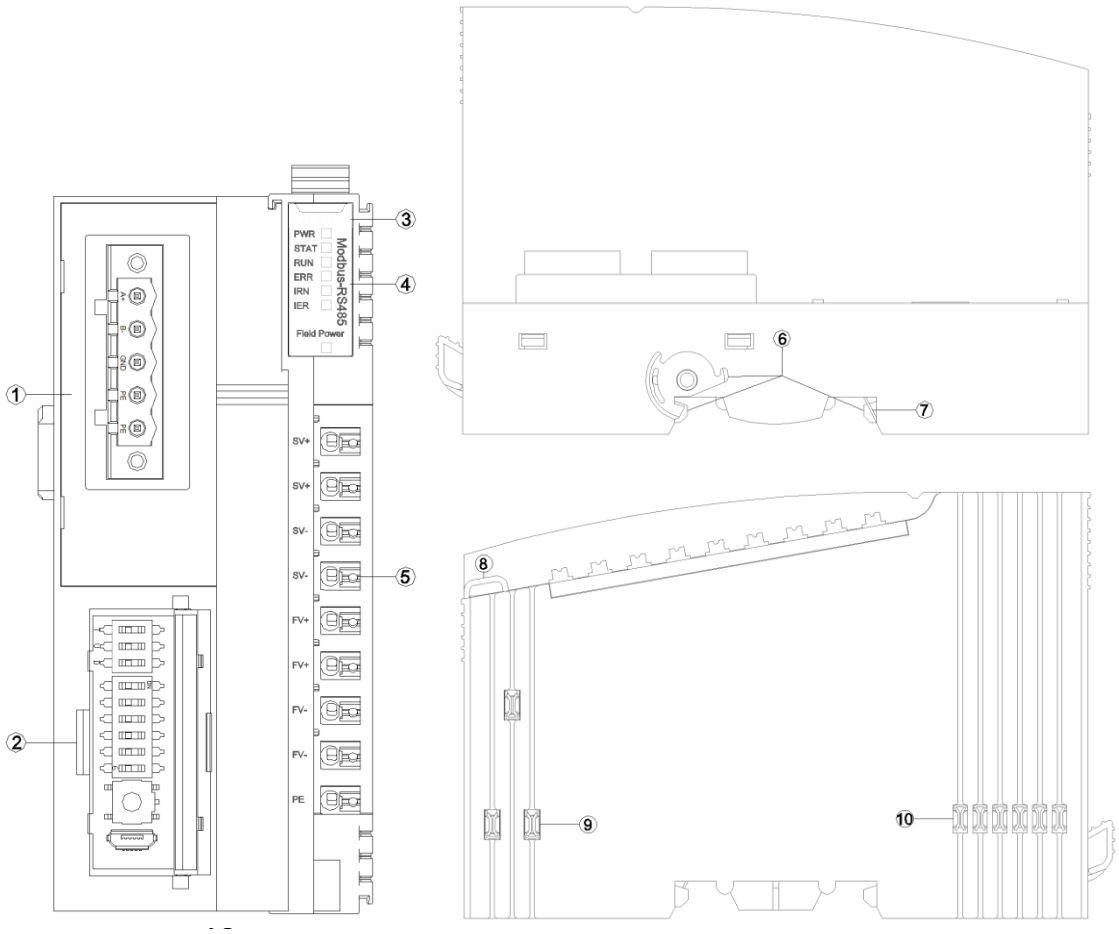

④ LED Indicator

⑤ Wiring Terminal

⑥ Buckle

⑦ Grounding Spring Sheet

⑧ Fixed Wiring Harness

⑨ Field Power

⑩ Internal Bus

3.1 RS485 Interface

Modbus RS485 port is 5 Pin screw terminals and its Pin definition is as below:

Pin	Definition	Description
1	A+	RS485 A+
2	B-	RS485 B-
3	SGND	Signal Grounded
4	Shield	Earthing of Shield
5	PE	Protect Earthing

It is recommended to use cables with cores smaller than 1mm².

The cold-pressed terminal parameters are as follows:

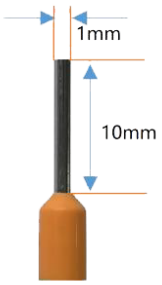

3.2 Configuration Interface

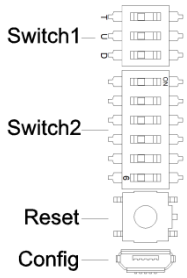

Switch1: DIP switch used to set the terminal resistance, pull up and down resistance.

T: terminal resistance, U: pull up resistance, D: pull down resistance.

The Switch2: DIP switch used to set the adapter module address. It is set by an 8-bit binary hardware dial - code switch, and each Modbus adapter has a unique station address (1~63).

(Special note: When the address needs to be set beyond 63, the address should be dialed to set it to 0, and the station address should be set in IO Config software)

Reset: Module reset button, long pressing the button for more than 5 seconds and all parameters of the module will be restored to the default value. When the Reset button is activated, a green indicator will light up in the upper left corner of the button.

Config: configured ports, it is standard MicroUSB interface for configuring device parameters and firmware upgrades.

3.3 LED Indicator

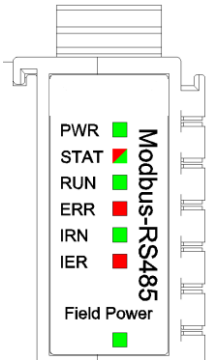

PWR Power State (GREEN)	Definition
ON	System Power Normal
OFF	System Power Failure
STAT Module State (RED/GREEN)	Definition
Double Flash (RED)	Module Soft Restarted by Hard-Fault
ON(GREEN)	Running
Single Flash (GREEN)	Stopping
Flash(2.5Hz) (RED/GREEN)	Boot Mode
Flash(10Hz) (RED/GREEN)	Firmware Updating
RUN Network State (GREEN)	Definition
OFF	No data exchanging.
Flash	Modbus data exchanging
ERR Network Error (RED)	Definition
OFF	Modbus data exchanging normal
ON	Modbus data exchanging failure
IRN IO Run (GREEN)	Definition
ON	IO initialization normal
OFF	IO initialization failure
IER IO Error (RED)	Definition

OFF	IO communication normal
Double Flash	IO communication failure
Field Power State (GREEN)	Definition
ON	Field Power Normal
OFF	Field Power Failure

4 Wiring

Please note when wiring: for the internal construction, two terminals of SV+ have been short-connected, two terminals of SV- have been short-connected, two terminals of FV+ have been short-connected, and two terminals of FV- have been short-connected. For external it only needs to access one system power supply and one field power supply.

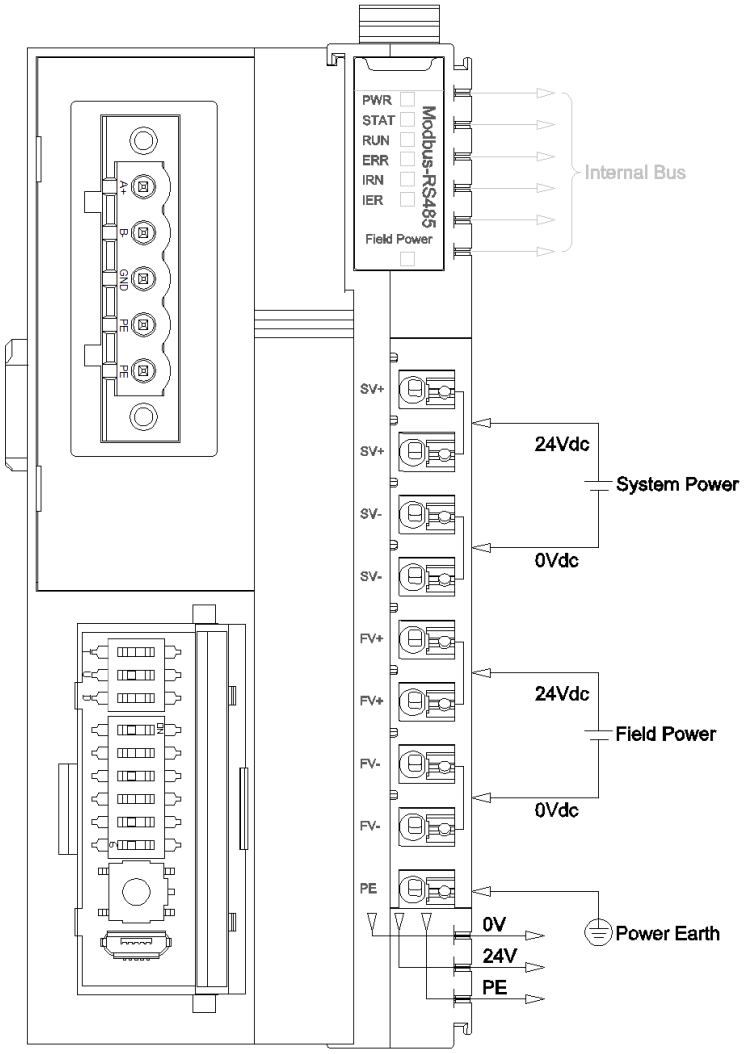

5 Process data definition

5.1 Adapter process data definition

Modbus-RTU Adapter itself has no input-output process data.

5.2 IO Module process data mapping

The network adapter reads and writes input and output process data of IO module in real time through the internal bus, and its data mapping model is shown as follow:

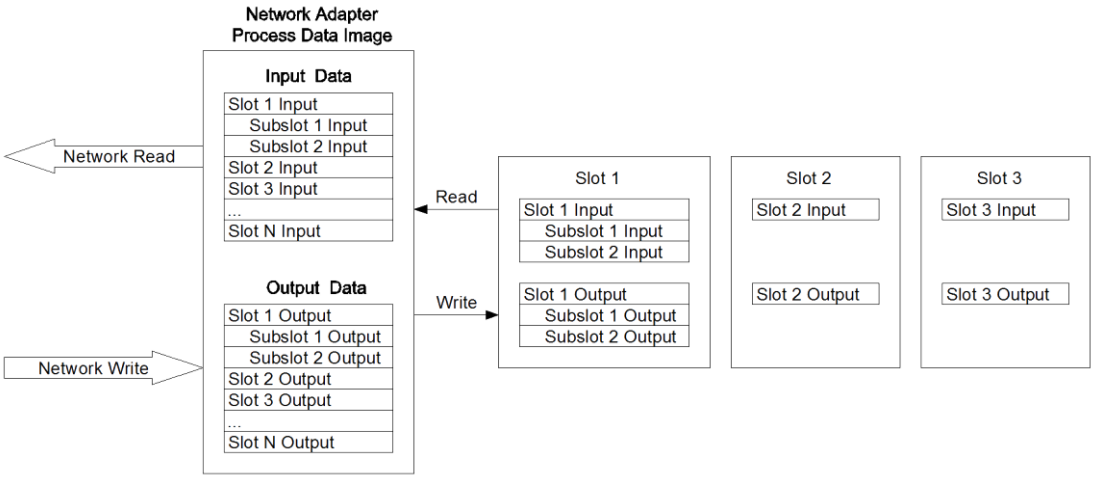

Modbus address mapping table varies according to module combination, and detailed address mapping table could be viewed through IO Config – the configuration software.

6 Configuration Parameter Definition

Configuration Parameter								
Bit No	Bit 7	Bit 6	Bit 5	Bit 4	Bit 3	Bit 2	Bit 1	Bit 0
Byte 0						Fault Action for Output	Fault Action for Input	Source of Configuration Data
Byte 1	Slave ID							
Byte 2	BaudRate							
Byte 3								
Byte 4								
Byte 5								
Byte 6			Serial Mode	Stop Bits		Parity Bits		Data Bits
Byte 7	Char Pitch							
Byte 8	Response Delay(ms)							
Byte 9								

Data description:

Source of Config Data： Parameter configuration mode (Default: 0)

0：Configuration Software

Fault Action for Input： Input fault handling mode, when IO module is offline, the adapter will process IO module input data according to this mode. (Default: 0, Hold Last Input Value)

0：Hold Last Input Value

1：Clear Input Value

Fault Action for Output： Output fault handling mode, when the IO module is offline, the adapter will process the IO module output data according to this mode. (Default: 1, Clearing Output Value)

0：Hold Last Output Value

1：Clearing Output Value

Slave ID： Modbus slave ID，hardware dial code or software configuration，1-247

Baud Rate： Serial port baud rate，(Default：2，9600bps)

0：2400bps

1：4800bps

2：9600bps

3：14400bps

4：19200bps

5：38400bps

6：57600bps

7：115200bps

Data Bits: data bits，(default：Bit 1, 8)

0：Bit 7

1：Bit 8

Parity Bits：Parity Checking，(default：0，no parity)

0：None

1：ODD

2：EVEN

Stop Bits：stop bits，(default：Bit 0，1)

0：Bit 1

1：Bit 2

Serial Mode：Serial port mode (default：0，RTU)

0：RTU

1：ASCII

Char Pitch: Character Pitch is the detection time of frame interval when receiving a message (T is the time of single character transmission, related to baud rate) (default: 2, 5 characters)

0：1.5 characters

1：3.5 characters

2：5 characters

3：10 characters

4：20 characters

5：50 characters

6：100 characters

7：200 characters

Response Delay(ms)：Reply delay time from Slave, self-defined, default 10ms, effective range: 0-65535.

A Dimension drawing

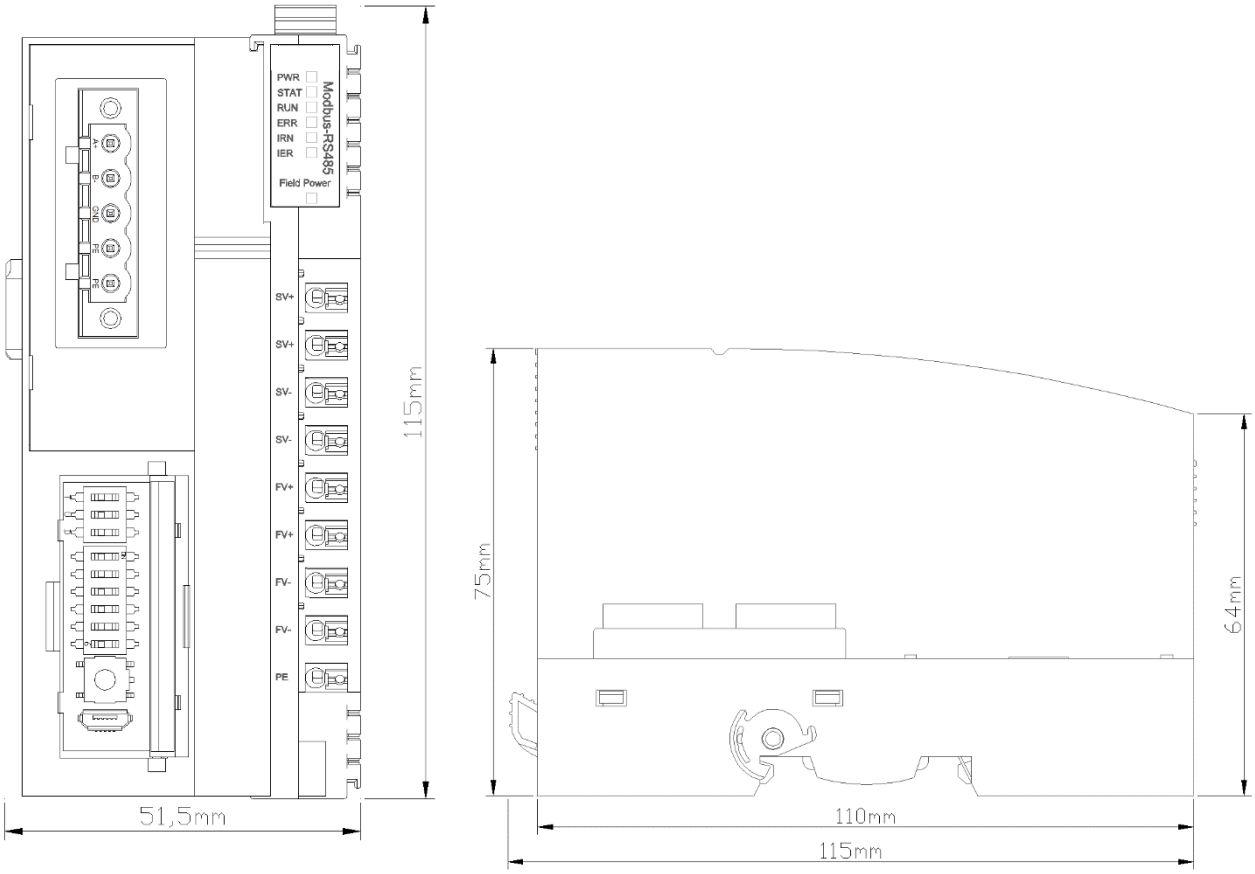

ND-8012 Profibus-DP Bus Adapter

1 Module Overview

ND-8012 PROFIBUS-DP bus adapter supports access of standard PROFIBUS-DP, and the protocol version it supports is DPV0.

2 Technical Parameter

Adapter Hardware Parameter	
System Power	Nominal:24Vdc, Range: 9-36Vdc Reverse Protection: YES
Power Consumption	30mA@24Vdc
Internal Bus Supply Current	Max：2.5A@5VDC
Isolation	System Power to Field Power Isolation
Power Supply	Nominal:24Vdc, Range:22-28Vdc
Field Power Current	Max. DC 8A
IO Modules Supported	32 pcs
Wiring	Max.1.0mm² (AWG 17)
Mounting Type	35mm DIN-Rail
Size	115*51.5*75mm
Weight	130g
Environment Specification	
Operation Temperature	-40~85℃
Operation Humidity	5%-95% (No Condensation)
Ingress Protection Rating	IP20
Profibus-DP Parameter	
Protocol	PROFIBUS DPV0
Interface Type	DB9 female head
Station Type	PROFIBUS Slave
Station Address	Dial code switch configuration
Topology	Bus topology
Configuration Max. Length	232 bytes
IO data Max. Length	Input: Max. 244 bytes, Output: Max. 244 bytes, Sum of input and out put: Max. 288 bytes

3 Hardware Interface

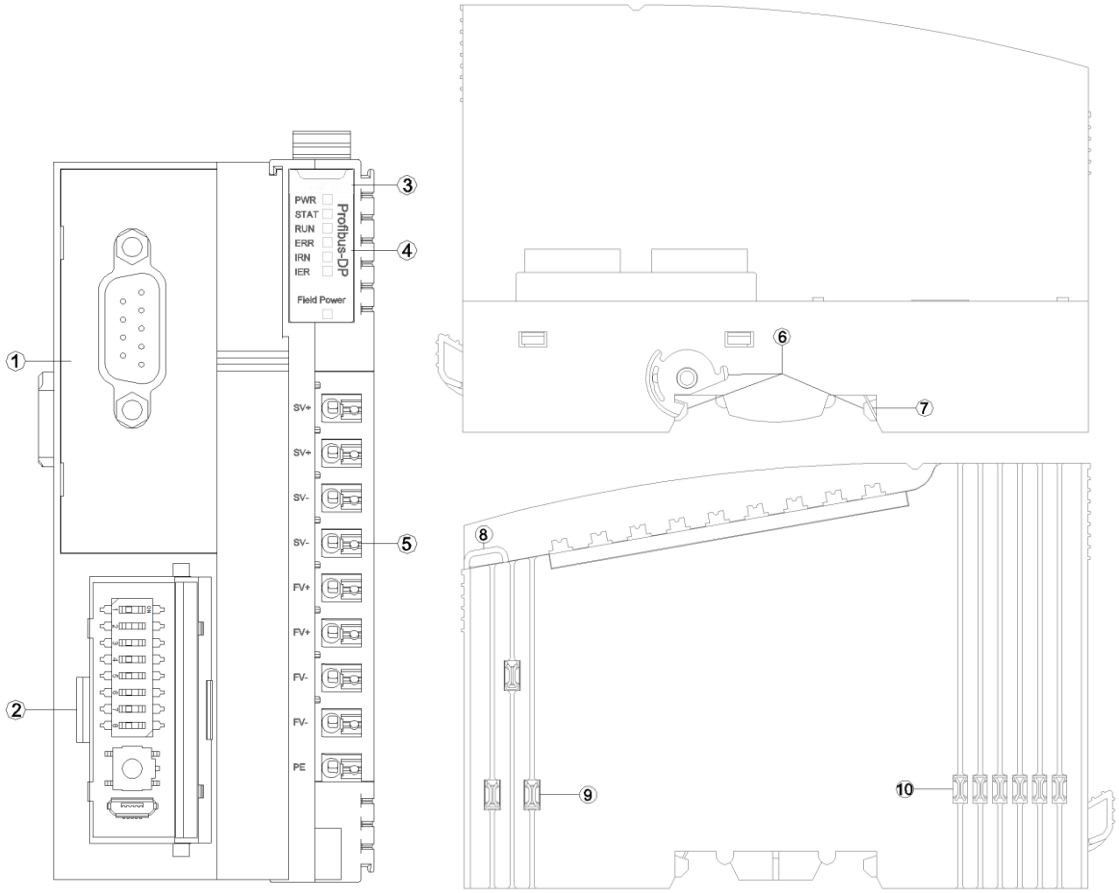

① Profibus-DP port

② Config Interface

③ Module type

④ LED Indicator

⑤ Wiring Terminal

⑥ Buckle

⑦ Grounding Spring Sheet

⑧ Fixed Wiring Harness

⑨ Field Power

⑩ Internal Bus

3.1 Profibus-DP Interface

Profibus-DP port is 9 Pin terminals and its Pin definition is as below:

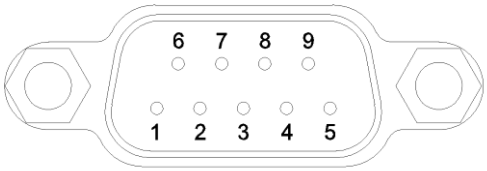

Interface Pin Definition

Pin	Definition	Description
1	Shield	Earthing of Shield
2	--	--
3	B	Data line B
4	CNTR-P	Direction control-P
5	DGND	Signal Grounded
6	VP(+)	+5v
7	--	--
8	A	Data lineA
9	CNTR-N	Direction control-N

3.2 Configuration Interface

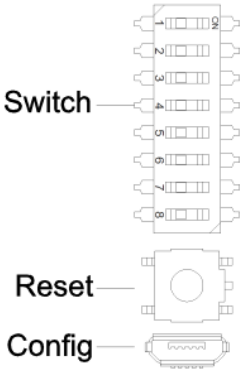

Switch: The station address of the Profibus DP adapter. It is set by an 8-bit binary hardware dial code switch, and each PROFIBUS adapter has a unique station address (1~127).

Reset: Module reset button, long pressing the button for more than 5 seconds and all parameters of the module will be restored to the default value. When the Reset button is activated, a green indicator will light up in the upper left corner of the button.

Config: configured ports, it is standard MicroUSB interface for configuring device parameters and firmware upgrades.

3.3 LED Indicator

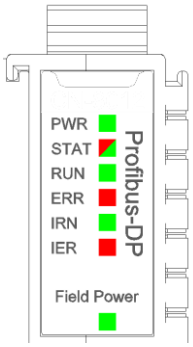

PWR Power State (GREEN)	Definition
ON	System Power Normal
OFF	System Power Failure
STAT Module State (RED/GREEN)	Definition
Double Flash (RED)	Module Soft Restarted by Hard-Fault
ON(GREEN)	Running
Single Flash (GREEN)	Stopping
Flash(2.5Hz) (RED/GREEN)	Boot Mode
Flash(10Hz) (RED/GREEN)	Firmware Updating
RUN Network State (GREEN)	Definition
OFF	DP off-line mode
ON	DP data exchanging mode
ERR Network Error (RED)	Definition
Off	DP data exchanging mode
Flash	DP off-line mode
IRN IO Run (GREEN)	Definition
ON	IO initialization normal
OFF	IO initialization failure
IER IO Error (RED)	Definition
OFF	IO communication normal
Double Flash	IO communication failure
Field Power State (GREEN)	Definition
ON	Field Power Normal
OFF	Field Power Failure

4 Wiring

Please note when wiring: for the internal construction, two terminals of SV+ have been short-connected, two terminals of SV- have been short-connected, two terminals of FV+ have been short-connected, and two terminals of FV- have been short-connected. For external it only needs to access one system power supply and one field power supply.

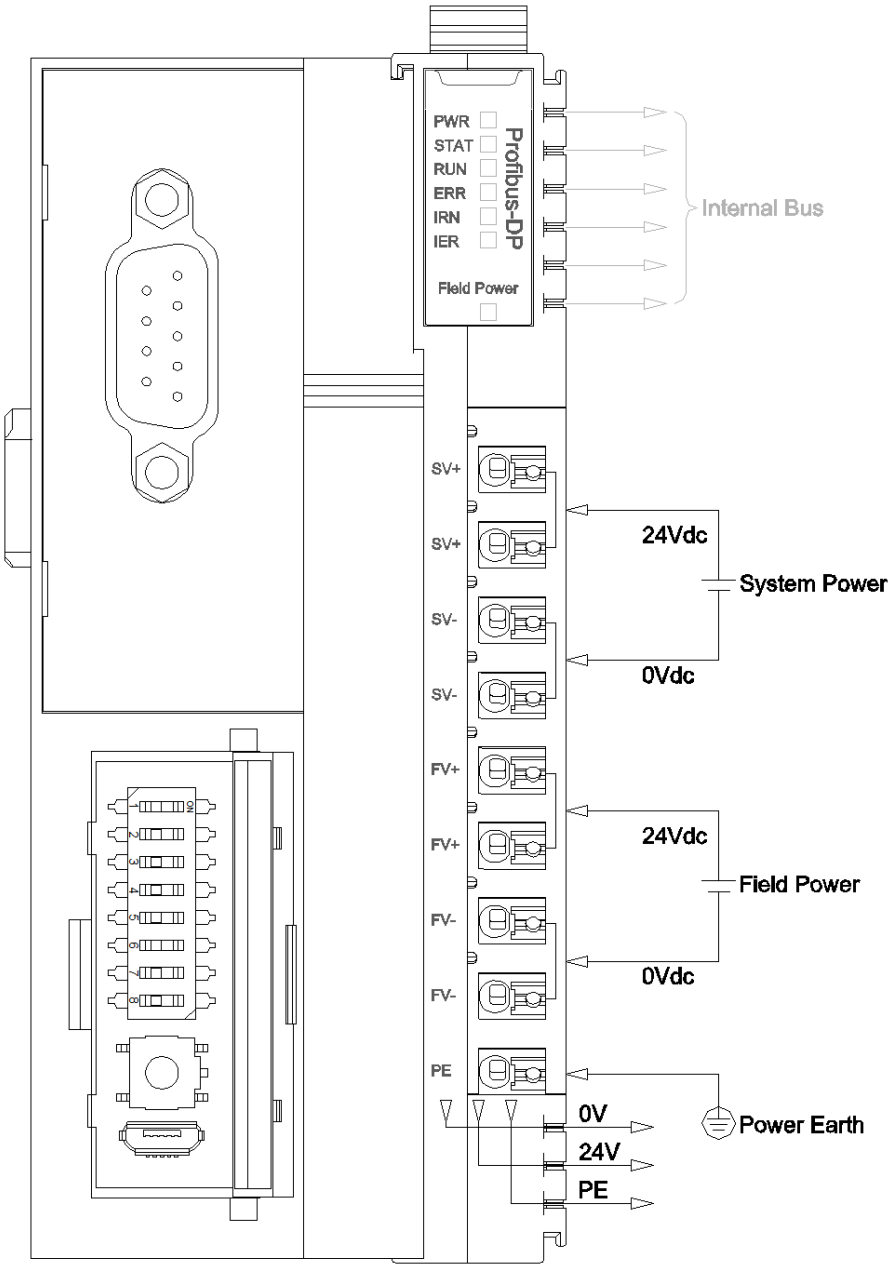

5 Process data definition

5.1 Adapter process data definition

Profibus-DP Adapter itself has no input-output process data.

5.2 IO Module process data mapping

The network adapter reads and writes input and output process data of IO module in real time through the internal bus, and its data mapping model is shown as follow:

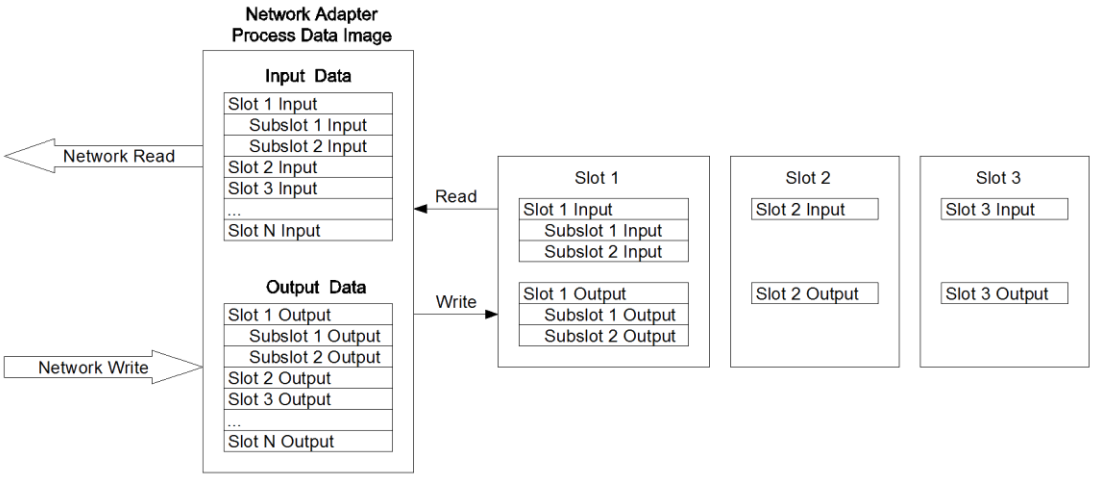

Real-time data exchange is conducted between the network adapter and the extended IO module, and the data address table could be dynamically allocated according to the different modules inserted in the IO slot.

The actual mapping address should be added IO module manually in STEP 7, TIA or other configured software, and the address would be automatically mapped, so the actual mapping address could be checked.

6 Configuration Parameter Definition

Configuration Parameter								
Bit No	Bit 7	Bit 6	Bit 5	Bit 4	Bit 3	Bit 2	Bit 1	Bit 0
Byte 0						Fault Action for Output	Fault Action for Input	Source of Configuration Data
Byte 1	DP Address							

Data description:

Source of Config Data： Parameter configuration mode (Default: 1, Field BUS configuration)

0：Configured software configuration

1：Field BUS configuration

Fault Action for Input： Input fault handling mode, when IO module is offline, the adapter will process IO module input data according to this mode. (Default: 0, Hold Last Input Value)

0：Hold Last Input Value

1：Clear Input Value

Fault Action for Output： Output fault handling mode, when the IO module is offline, the adapter will process the IO module output data according to this mode. (Default: 1, Clearing Output Value)

0：Hold Last Output Value

1：Clearing Output Value

DP Address： DP slave device no. (Read-only, displayed as the value of the dial code switch)

A Dimension drawing

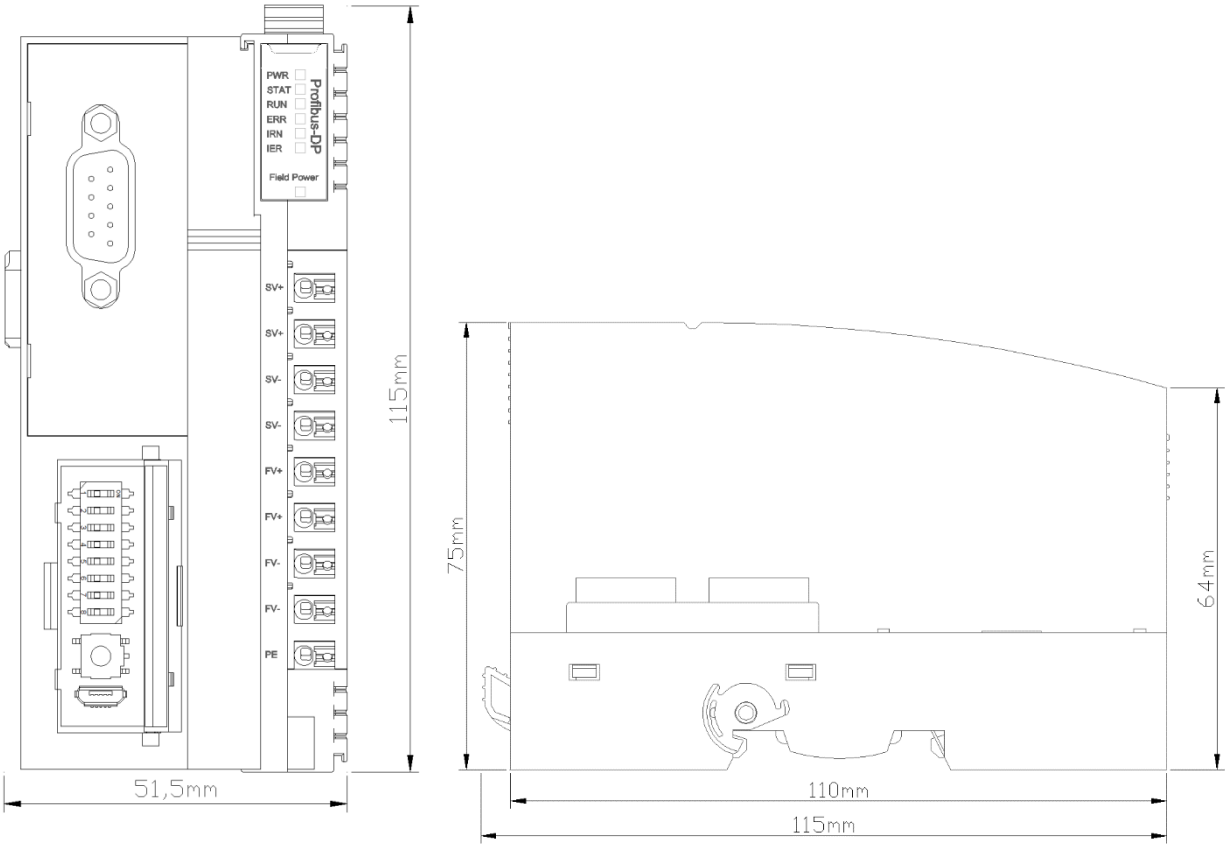

ND-8013 CC-Link Bus Adapter

1 Module Overview

ND-8013 CC-Link bus adapter supports standard CC-Link Ver.2 communication and it could monitor the communication status of IO modules in real time.

2 Technical Parameter

Adapter Hardware Parameter	
System Power	Nominal:24Vdc, Range: 9-36Vdc Reverse Protection: YES
Power Consumption	110mA@24Vdc
Internal Bus Supply Current	Max：2.5A@5Vdc
Isolation	System Power to Field Power Isolation
Power Supply	Nominal:24Vdc, Range:22-28Vdc
Field Power Current	Max. DC 8A
IO Modules Supported	32pcs
Wiring	Max.1.0mm² (AWG 17)
Mounting Type	35mm DIN-Rail
Size	115*51.5*75mm
Weight	130g
Environment Specification	
Operation Temperature	-40~85℃
Operation Humidity	5%-95% (No Condensation)
Ingress Protection Rating	IP20
CC-Link Parameter	
Protocol	CC-Link Ver.2
Station Type	Remote device station
Number of Logical Stations Occupied	1, 2, 3, 4
Extended Loop Setup	1 time, 2 times, 4 times, 8 times
I/O Data Capacity	RX/RY capacity（bit）max. 896 RWr/RWw capacity（word）max. 128
Baud Rate	156K/625K/2.5M/5M/10Mbps
Node Station (Station No.)	1~64(DIP switch configuration)，when DIP switch value is not 1~64, and the mandatory station number is 1.
Interface	5 Pin screw terminal
Max. bus length	1200m（156kbps）
Terminal resistance	120ohm

3 Hardware Interface

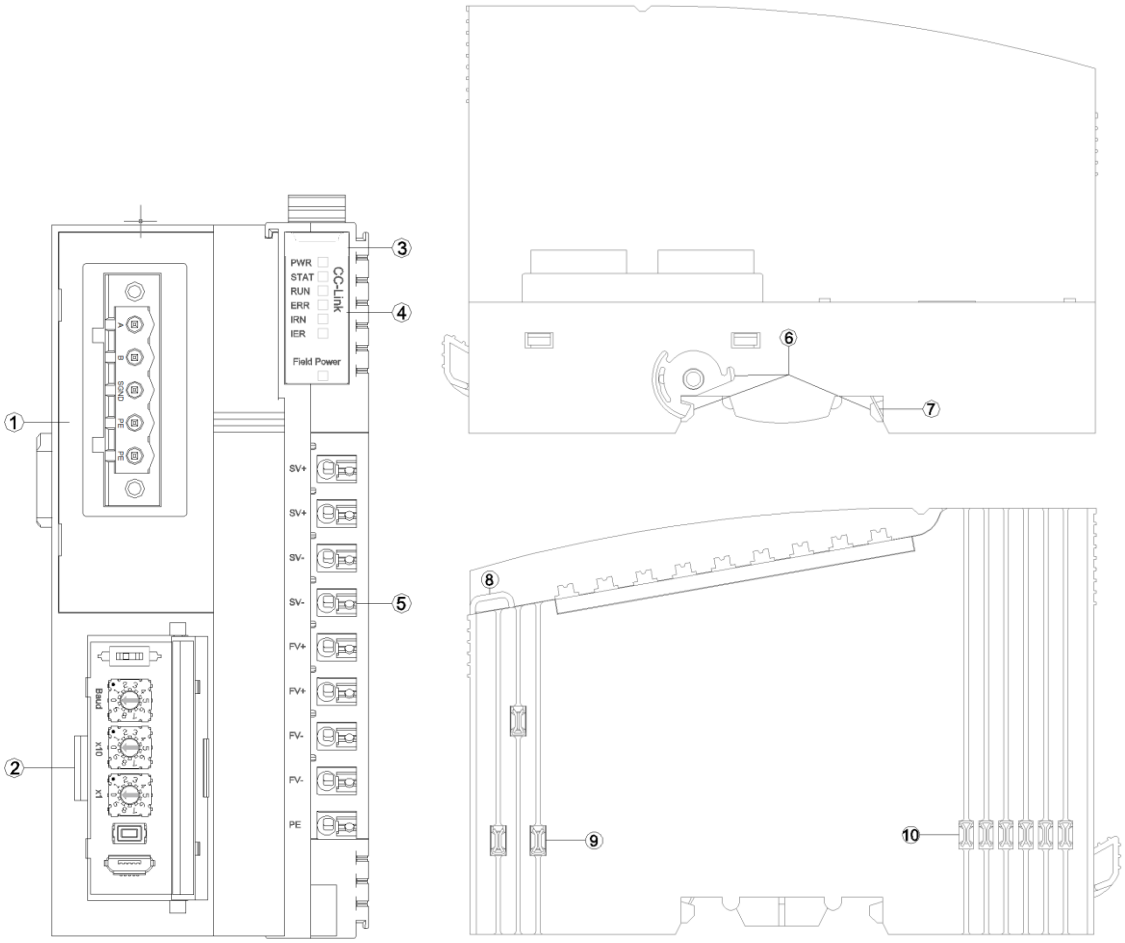

① CC-Link port

② Config Interface

③ Module type

④ LED Indicator

⑤ Wiring Terminal

⑥ Buckle

⑦ Grounding Spring Sheet

⑧ Fixed Wiring Harness

⑨ Field Power

⑩ Internal Bus

3.1 CC-Link Interface

Modbus RS485 port is 5 Pin screw terminals and its Pin definition is as below:

Pin	Definition	Description
1	DA	Signal DA
2	DB	Signal DB
3	DG	Signal Grounded
4	SLD	Earthing of Shield
5	FG	Protect Earthing

3.2 Configuration Interface

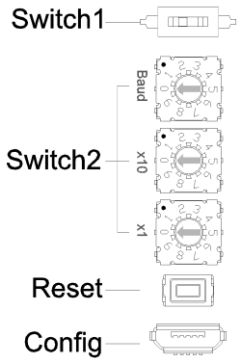

Switch1: DIP switch is used to set the terminal resistance.

The Switch2: DIP switch is used to set the adapter module node address (station number) and baud rate.

The node address is set by two hardware DIP switches of decimal number, and each CC-Link adapter has a unique node address (1~64).

(Please note: when the DIP switch value is not 1~64, the node address ie the station number is compelled to be 1.)

The corresponding relation between baud rate and dial code is:

Code configuration	Communication Rate (bps)
0	156k
1	625k
2	2.5M
3	5M
4	10M

Reset: Module reset button, long pressing the button for more than 5 seconds and all parameters of the module will be restored to the default value. When the Reset button is activated, a green indicator will light up in the upper left corner of the button.

Config: configured ports, it is standard MicroUSB interface for configuring device parameters and firmware upgrades.

3.3 LED Indicator

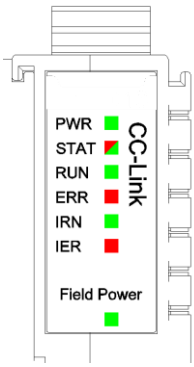

PWR Power State (GREEN)	Definition
ON	System Power Normal
OFF	System Power Failure
STAT Module State (RED/GREEN)	Definition
Double Flash (RED)	Module Soft Restarted by Hard-Fault
ON(GREEN)	Running
Single Flash (GREEN)	Stopping
Flash(2.5Hz) (RED/GREEN)	Boot Mode
Flash(10Hz) (RED/GREEN)	Firmware Updating
RUN Network State (GREEN)	Definition
OFF	No data exchanging.
ON	CC-Link data exchanging
ERR Network Error (RED)	Definition
OFF	CC-Link data exchanging normal
ON	CC-Link data exchanging failure
Flash	When CC-Link communication normally functiones, the station number or baud rate will get changed
IRN IO Run (GREEN)	Definition
ON	IO initialization normal

OFF	IO initialization failure
IER IO Error (RED)	Definition
OFF	IO communication normal
Double Flash	IO communication failure
Field Power State (GREEN)	Definition
ON	Field Power Normal
OFF	Field Power Failure

4 Wiring

Please note when wiring: for the internal construction, two terminals of SV+ have been short-connected, two terminals of SV- have been short-connected, two terminals of FV+ have been short-connected, and two terminals of FV- have been short-connected. For external it only needs to access one system power supply and one field power supply.

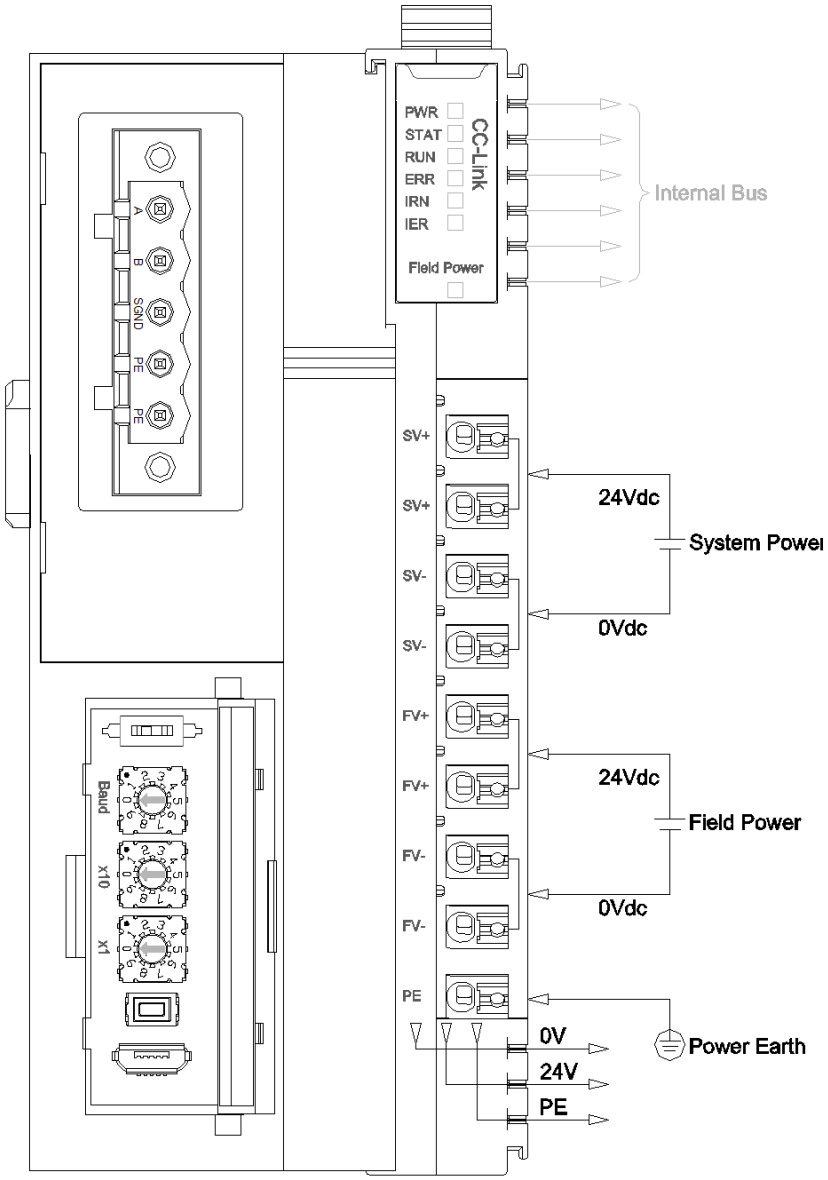
PWR
STAT
RUN
ERR
IRN
IER
CC-Link
Field Power
Internal Bus
A
B
SGND
PE
PE
SV+
SV+
SV-
SV-
FV+
FV+
FV-
FV-
PE
24Vdc
System Power
0Vdc
24Vdc
Field Power
0Vdc
Power Earth
0V
24V
PE
Baud
x10
x1

5 Process data definition

5.1 Adapter process data definition

CC-Link Adapter itself has no input-output process data.

5.2 IO Module process data mapping

The network adapter reads and writes input and output process data of IO module in real time through the internal bus, and its data mapping model is shown as follow:

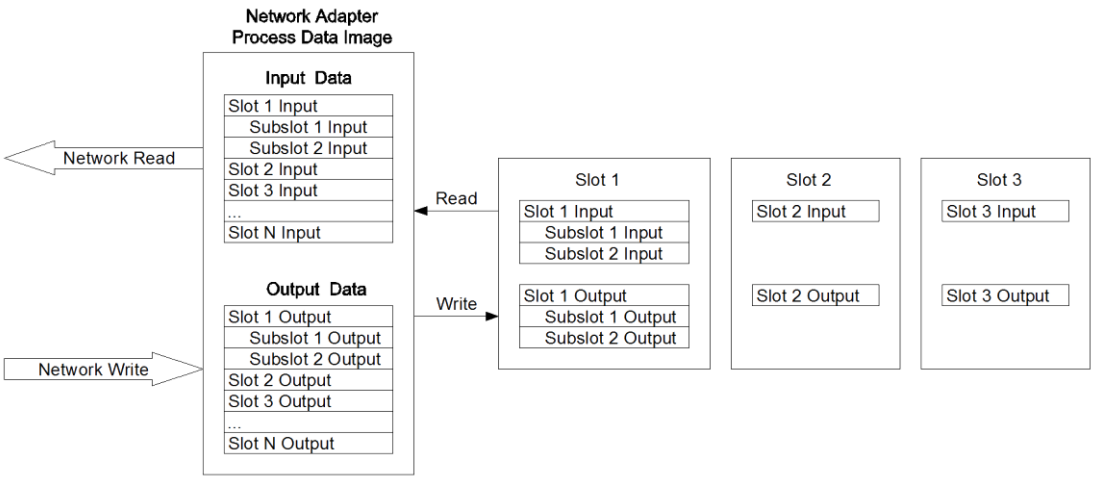

6 Configuration Parameter Definition

Configuration Parameter								
Bit No	Bit 7	Bit 6	Bit 5	Bit 4	Bit 3	Bit 2	Bit 1	Bit 0
Byte 0						Fault Action for Output	Fault Action for Input	Source of Configuration Data
Byte 1	Slave ID							
Byte 2	BaudRate							
Byte 3	Occupied Stations							
Byte 4	Extesion Cycles							
Byte 5	Auto Stations/Cycles							
Byte 6	RX/RY Size(Bits)							
Byte 7								
Byte 8	RWr/RWw Size(words)							
Byte 9								

Data description:

Source of Configuration Data： Parameter configuration mode (Default: 0)

0：Configuration Software

Fault Action for Input： Input fault handling mode, when IO module is offline, the adapter will process IO module input data according to this mode. (Default: 0, Hold Last Input Value)

0：Hold Last Input Value

1：Clear Input Value

Fault Action for Output： Output fault handling mode, when the IO module is offline, the adapter will process the IO module output data according to this mode. (Default: 1, Clearing Output Value)

0：Hold Last Output Value

1：Clearing Output Value

Slave ID：CC-Link slave ID number, hardware DIP switch setting, 1-64

Baud Rate：Serial port baud rate, (Default：0，156bps))

0：156Kbps

1：625Kbps

2：2.5Mbps

3：5Mbps

4：10Mbps

Occupied Stations：The number of logical stations occupied (Default：3，4 stations)

0：1 station

1：2 stations

2：3 stations

3：4 stations

Extesion Cycles：Extended loop setup (Default：3，8 Times)

0：1 Time

1：2 Times

2：4 Times

3：8 Times

Auto Stations/Cycles：Automatic counting station number and extension cycle, disable, cycle optional. (Default: 0, disabled)

0：disabled

1：enabled

RX/RY Size(Bits)：RX/RY Capacity (Bits)

RWr/RWw Size(words)：RWr/RWw Capacity (Word)

A Dimension drawing

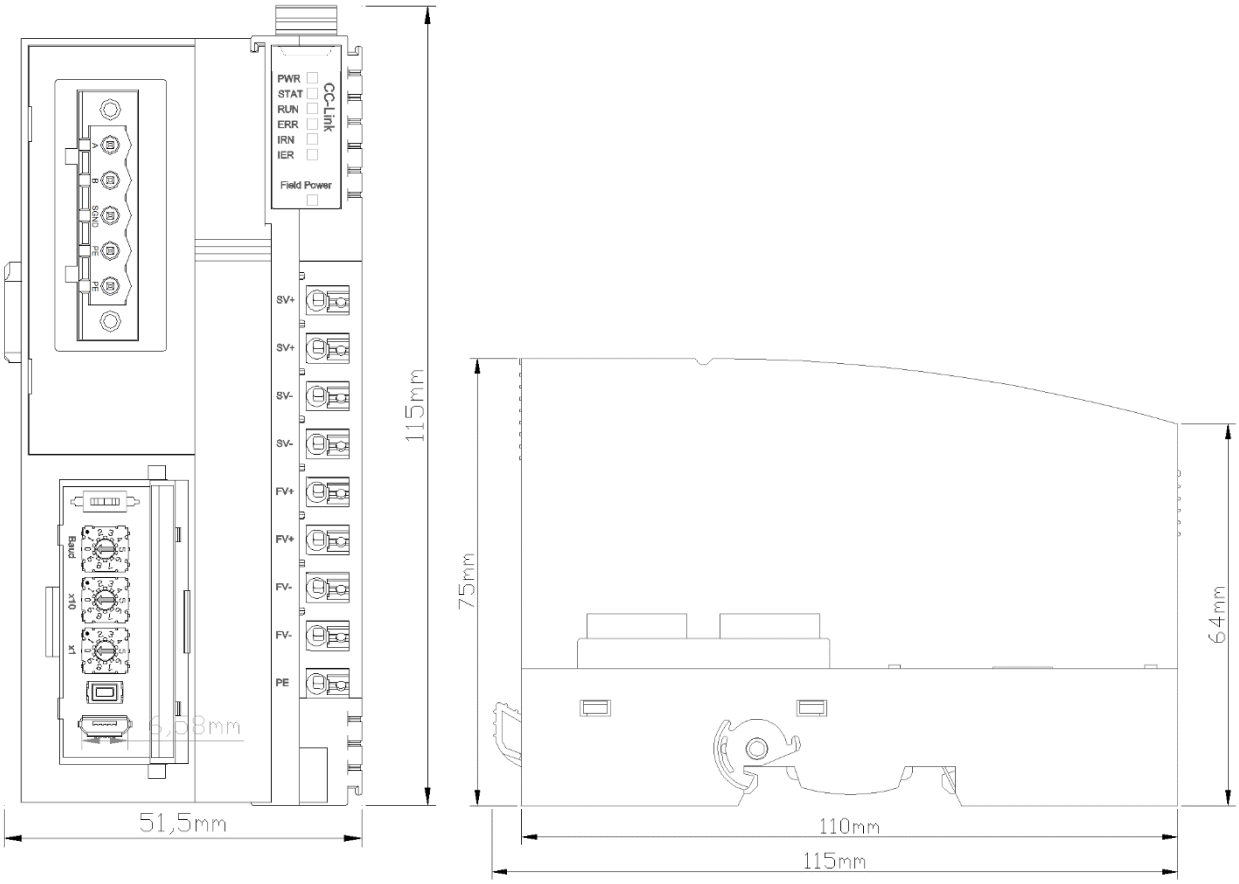

ND-8021 CANopen Bus Adapter

1 Module Overview

ND-8021 CANopen bus adapter supports standard CANopen communication and device specification DS401.

2 Technical Parameter

Adapter Hardware Parameter	
System Power	Nominal:24Vdc, Range: 9-36Vdc Reverse Protection: YES
Power Consumption	50mA@24Vdc
Internal Bus Supply Current	Max：2.5A@5VDC
Isolation	System Power to Field Power Isolation
Power Supply	Nominal:24Vdc, Range:22-28Vdc
Field Power Current	Max. DC 8A
IO Modules Supported	32 pcs
Wiring	Max.1.0mm² (AWG 17)
Size	115*51.5*75mm
Weight	130g
Environment Specification	
Operation Temperature	-40~85℃
Operation Humidity	5%-95% (No Condensation)
Ingress Protection Rating	IP20
CANOPEN Parameter	
Protocol	CANopen DS401
Connect the interface	5PIN terminal
Station Address	Dial code setting（1-127）
Process Data	Input Max. 512 Byte Output Max. 512 Byte
Configuration Interface	Type-C
Transmission Rate	10 kbit/s, 20 kbit/s, 50 kbit/s, 100 kbit/s, 125 kbit/s, 250 kbit/s, 500 kbit/s, 800 kbit/s,1000 kbit/s

3 Hardware Interface

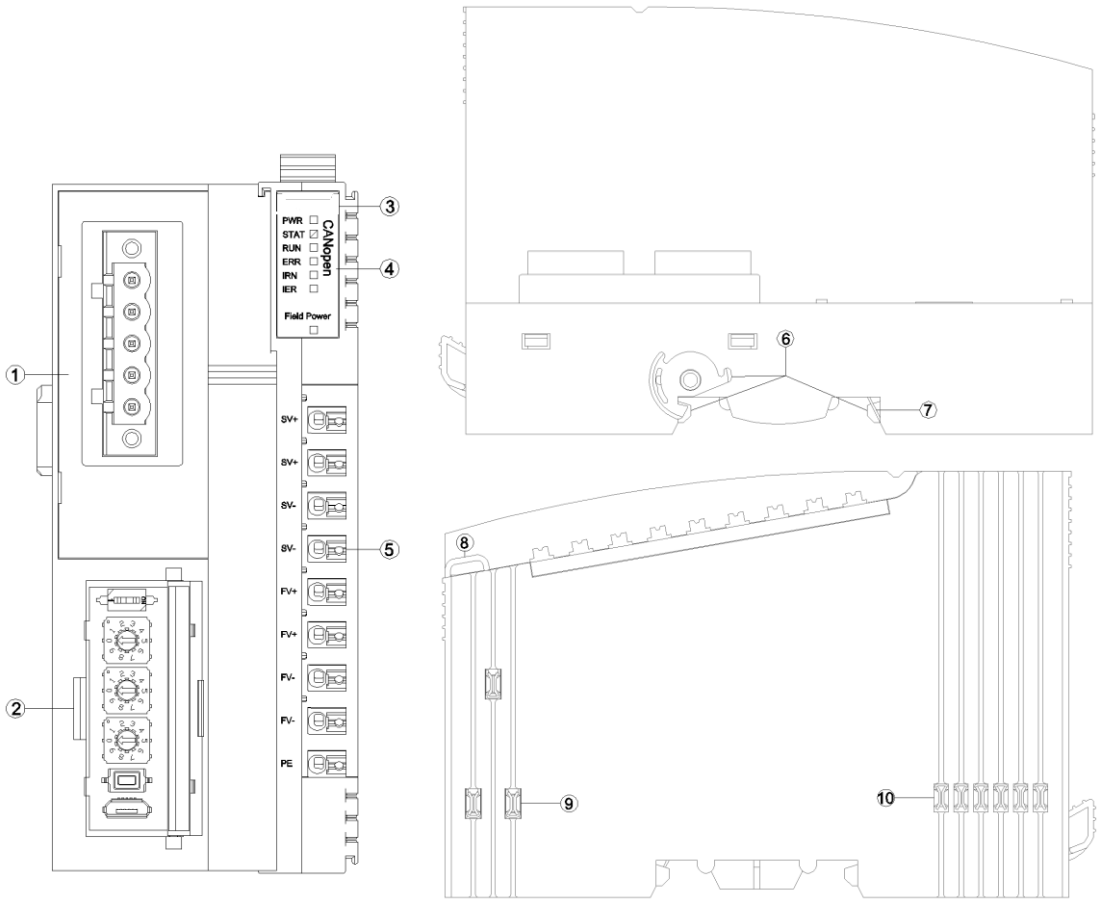

① CANopen port

② Config Interface

③ Module type

④ LED Indicator

⑤ Wiring Terminal

⑥ Buckle

⑦ Grounding Spring Sheet

⑧ Fixed Wiring Harness

⑨ Field Power

⑩ Internal Bus

3.1 CANopen Interface

The device wiring adpots 5 Pin screw terminals and its Pin definition is as below:

CANopen interface pin definition

Pin	Definition	Description
1	NC	Empty
2	CANH	CAN_H signal bus line
3	PE	Protecting Earthing
4	CANL	CAN_L signal terminal bus line
5	GND	Signal Grounded

It is recommended to use cables with cores smaller than 1mm².

The cold-pressed terminal parameters are as follows:

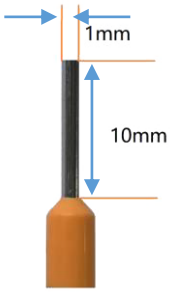

3.2 Configuration Interface

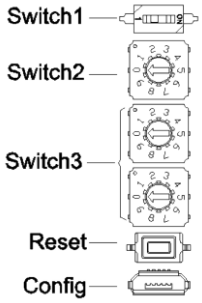

Switch1: DIP switch is used to set the terminal resistance.

Switch2: DIP switch is used to set the communication baud rate

Switch3: DIP switch is used to set the address of the adapter module. It is set by a 2-bit decimal hardware DIP switch, and each CANopen adapter has a unique station address (1~99).

Reset：Module reset button, long pressing the button for more than 5 seconds and all parameters of the module will be restored to the default value. When the Reset button is activated, a green indicator will light up in the upper left corner of the button. Config：configured ports, it is standard MicroUSB interface for configuring device parameters and firmware upgrades.

3.4LED Indicator

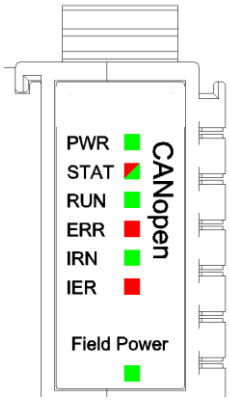

PWR Power State (GREEN)	Definition
ON	System Power Normal
OFF	System Power Failure
STAT Module State (RED/GREEN)	Definition
Double Flash (RED)	Module Soft Restarted by Hard-Fault
ON(GREEN)	Running
Single Flash (GREEN)	Stopping
Flash(2.5Hz) (RED/GREEN)	Boot Mode
Flash(10Hz) (RED/GREEN)	Firmware Updating
RUN Network State (GREEN)	Definition
ON	CAN communication has been established
Flash	The CAN communication is not established
ERR Network Error (RED)	Definition
OFF	no error
Flash	error existing
IRN IO Run Indicator (GREEN)	Definition
ON	IO initialization normal
OFF	IO initialization failure
IER IO Error Indicator (RED)	Definition
OFF	IO communication normal
Double Flash	IO communication failure
Field Power State Indicator (GREEN)	Definition
ON	Field Power Normal
OFF	Field Power Failure

4 Wiring

Please note when wiring: for the internal construction, two terminals of SV+ have been short-connected, two terminals of SV- have been short-connected, two terminals of FV+ have been short-connected, and two terminals of FV- have been short-connected. For external it only needs to access one system power supply and one field power supply.

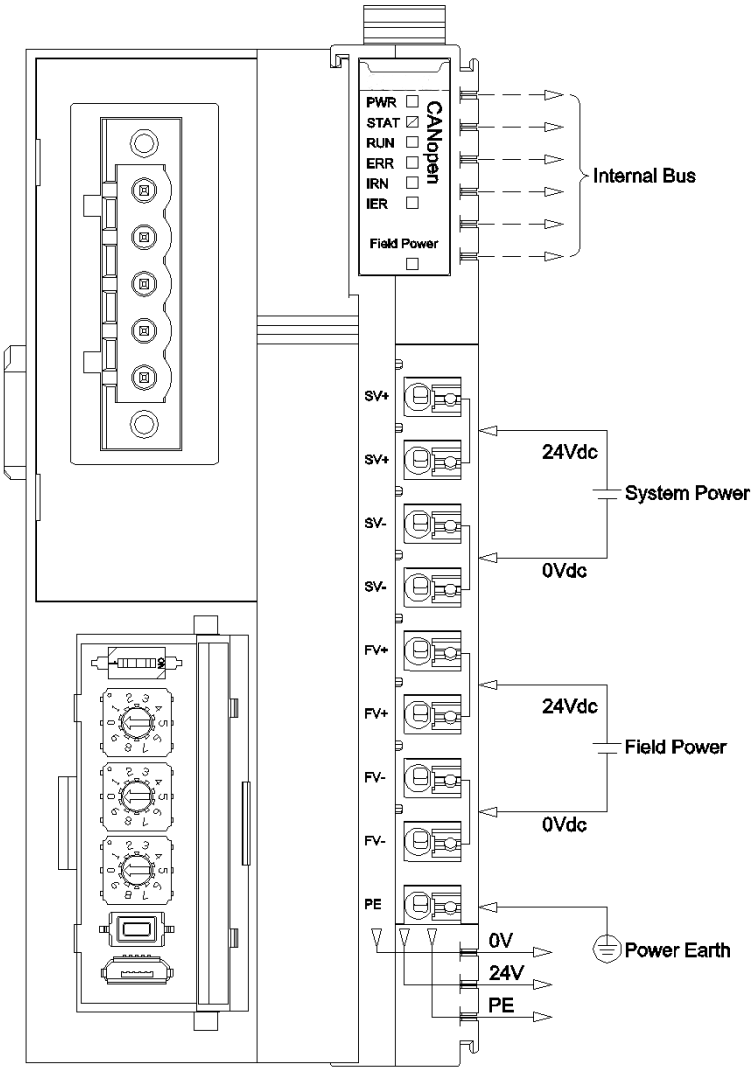

5 Process data definition

5.1 Adapter process data definition

CANopen Adapter itself has no input-output process data.

5.2 IO Module process data mapping

The network adapter reads and writes input and output process data of IO module in real time through the internal bus, and its data mapping model is shown as follow:

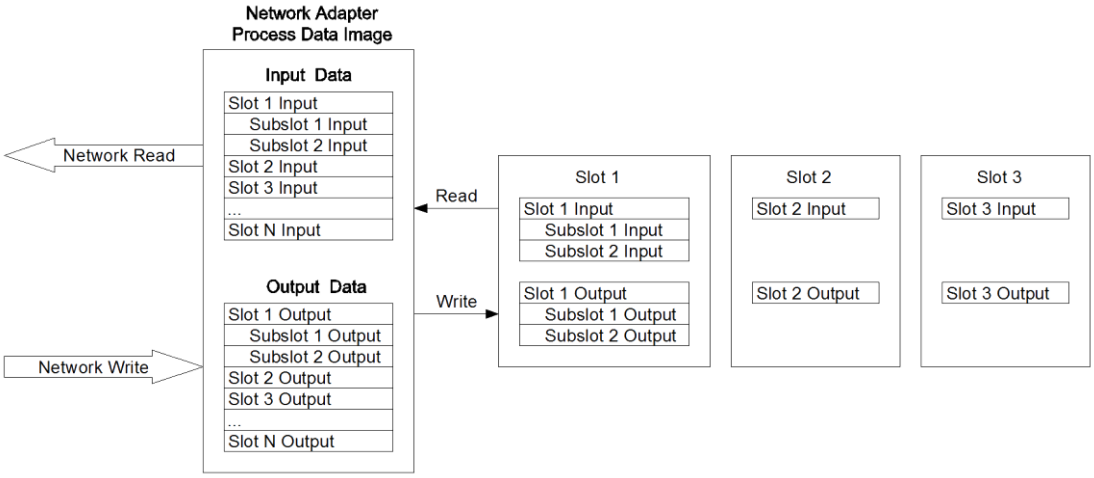

Input and output data of the IO module are mapped to objects 6000,6200, 6401,6411 based on data types. TPDO and RPDO both support variable PDO mapping.

6 Configuration Parameter Definition

Configuration Parameter				
No.	Description			
Byte 0	Reserved	Fault Action for Output	Fault Action for Input	Source of Configuration Data
Byte 1	CAN BaudRate			
Byte 2	CANopen Slave Address			
Byte 3	Reserved		Auto Start	Auto Generate PDO COB-ID
Byte 4				
Byte 5 ... Byte 19	Reserved			

Data description:

Source of Configuration Data：Parameter configuration mode (Default: 0)

0：Configured software configuration is valid

1：Fieldbus controller configuration is valid

Fault Action for Input：Input data handling mode when IO occurs fault (Default: 0)

0：Hold Last Input Value

1：Clear Input Value

Fault Action for Output: Output data handling mode when IO occurs fault (Default: 1)

0：Hold Last Output Value

1：Clear Output Value

CANopen Slave Address：CANopen slave device number (read only, default: 1)

CAN BaudRate：CAN bus baud rate Settings (default: 2)

0：1 MBit/sec

1：800 kBit/sec

2：500 kBit/sec

3：250 kBit/sec

4：125 kBit/sec

5：100 kBit/sec

6：50 kBit/sec

7：20 kBit/sec

8：10 kBit/sec

Auto Generate PDO COB-ID： PDO identifiers can be automatically assigned, the Enable and the Disable is optional. After the PDO identifier is enabled, the PDO identifier could be automatically assigned to the I/O module. After the PDO identifier is disabled, only 4 predefined PDO are available, and more PDO need to be set by the CANOPEN master. It is disabled by default.

Auto Start： The slave is automatically started. Enable and disable is optional. After this function is enabled, the site will proactively send a PDO message and uploads the message when there is data. It is disabled by default.

A Dimension drawing

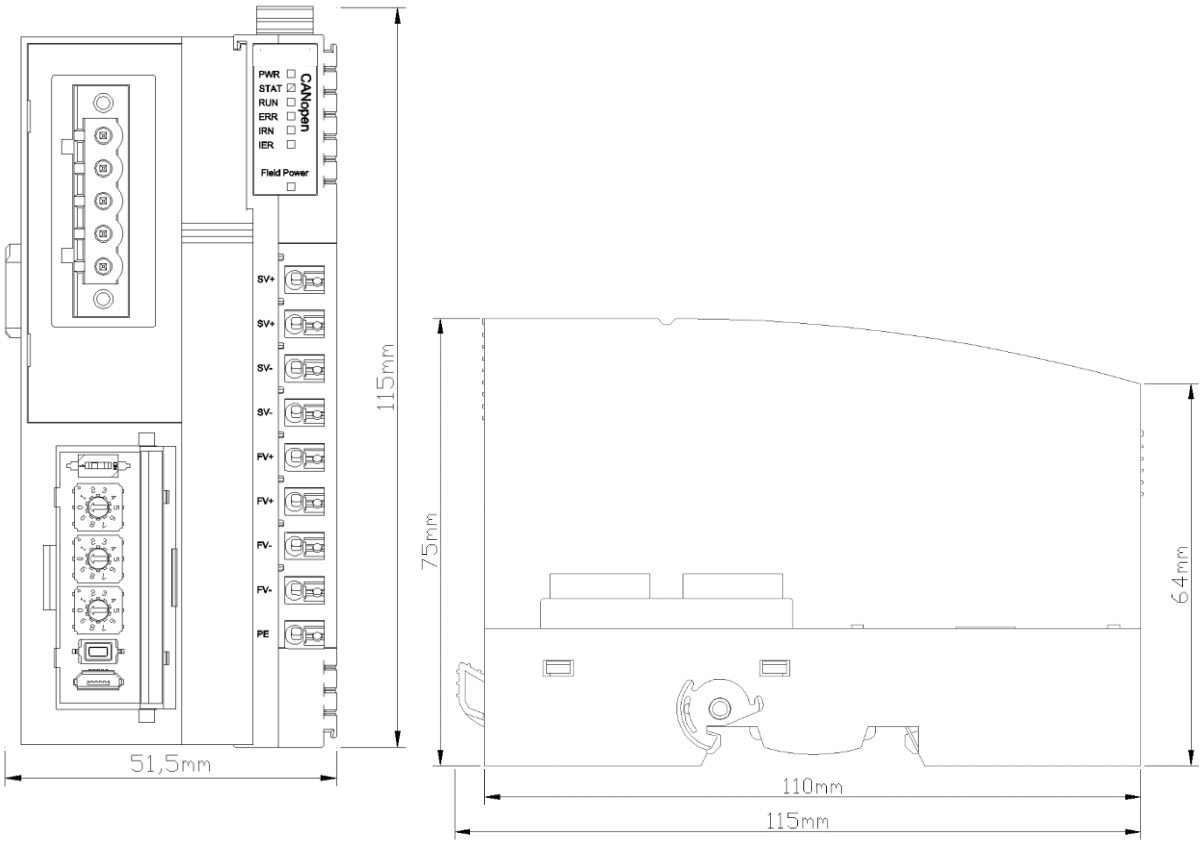

ND-8031 Modbus TCP Network Adapter

1 Module Overview

ND-8031 Modbus TCP Network Adapter supports the standard Modbus TCP Server Communication, and Ethernet supports the cascade function of dual-port switches. This adapter supports access to 5 Modbus TCP clients simultaneously, supports Modbus function code 01/02/03/04/05/06/15/16 /23, supports the Modbus application of watchdog, supports the process data maximum sum of input and output of 8192 bytes, and supports number of the extension IO module of 32. Module carries with the diagnostic function and it can monitor the communication state of IO module in real time.

2 Technical Parameters

Hardware Specification	
System Power	Nominal:24Vdc, Range: 9-36Vdc Reverse Protection: YES
Power Consumption	50mA@24Vdc
Current Output	Max.2.5A@5VDC
Isolation	System Power to Field Power Isolation
Field Power	Nominal:24Vdc, Range:22-28Vdc
Field Power Current	Max. 8A
IO Modules Supported	32 pcs
Wiring	Max.1.0mm² (AWG 17)
Mounting Type	35mm DIN-Rail
Size	115*51.5*75mm
Weight	130g
Environment Specification	
Operation Temperature	-40~85℃
Operation Humidity	5%-95% (No Condensation)
Ingress Protection Rating	IP20
Communication Interface Specification	
Protocol	Modbus-TCP
Process Data Area	Sum of input and output:8192 Byte
Diagnostic Function	Supported
Number of TCP	5 Clients
TCP Keepalive	YES
Modbus Watchdog	YES (Default: Enable, 30 Seconds)
Function Code	01/02/03/04/05/06/15/16/23
Network Interface	2*RJ45
Speed	10/100Mbps, MDI/MIDX, Full-Duplex
Distance	100m
IP Address	DIP switch set or IO-Config software set

3 Hardware Interface

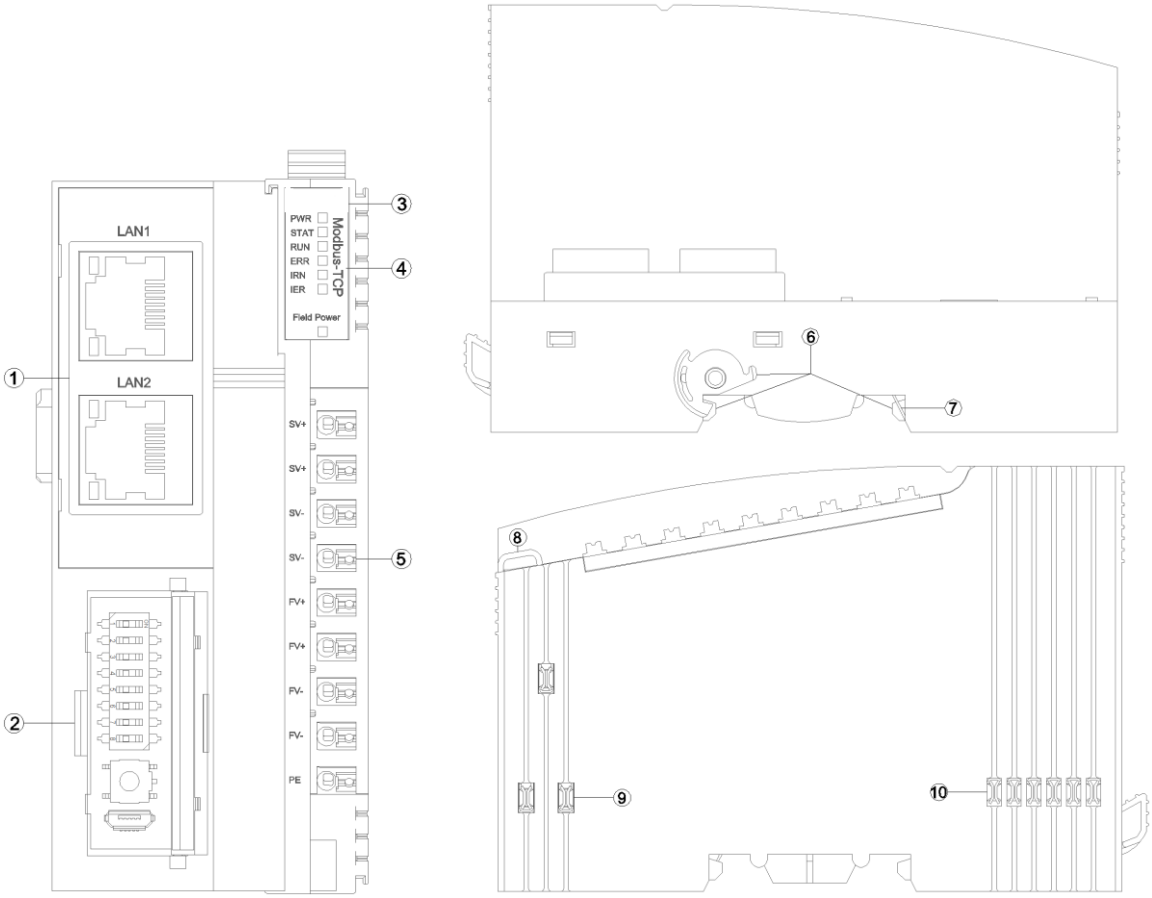

① Network Interface

② Config Interface

③ Module Type

④ LED Indicator

⑤ Wiring Terminal

⑥ Buckle

⑦ Grounding Spring Sheet

⑧ Fixed Wiring Harness

⑨ Field Power

⑩ Internal Bus

3.1Network Interface

LAN1/LAN2 support switch function, 10Mbps and 100Mbps data rates, MDI/MID-X auto crossover.

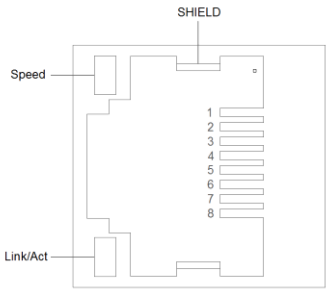

Speed: Network Speed (Green)

ON:100Mbps

OFF:10Mbps

Link/Act: Link State、Active State(Orange)

ON: Link UP

OFF: Link DOWN

Flash: Active

SHIELD: RJ45 Shield Interface

RJ45 Pin definition

Pin	Definition	Description
1	TD+	Transmitter Signal Positive
2	TD-	Transmitter Signal Negative
3	RD+	Receiver Signal Positive
4	--	--
5	--	--
6	RD-	Receiver Signal Negative
7	--	--
8	--	--

3.2Configuration Interface

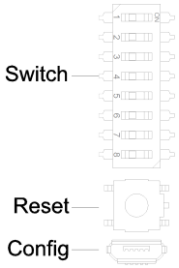

Switch: the DIP switch is used for setting the IP address (the default IP address is 192.168.1.100).

When the dial value is 0, all 4 bytes of the IP address are configured by the software or use the default IP address (192.168.1.100).

When the dial code value is not 0, the last byte of the IP address is determined by the dial code value, and the first three bytes could be configured by the software or use the default address(192.168.1).

The relationship between IP address and dial code value is shown in the following table:

Switch Bit Number (ON: 1, OFF: 0)								Switch Value	IP Address
1	2	3	4	5	6	7	8		
0	0	0	0	0	0	0	0	0	Configured by software
1	0	0	0	0	0	0	0	1	x.x.x.1
0	1	0	0	0	0	0	0	2	x.x.x.2
1	1	0	0	0	0	0	0	3	x.x.x.3
.	.	.	.	.	.	.	.	.	.
.	.	.	.	.	.	.	.	.	.
0	1	1	1	1	1	1	1	254	x.x.x.254
1	1	1	1	1	1	1	1	255	x.x.x.255
Notice: The default IP address after device reset is 192.168.1.100									

Reset: Module reset button, long pressing the button for more than 5 seconds and all parameters of the module will be restored to the default value. When the Reset button is activated, a green indicator will light up in the upper left corner of the button.

Config: Configure port, a standard Micro USB interface for configuring device parameters and firmware upgrades.

3.3 LED indicator

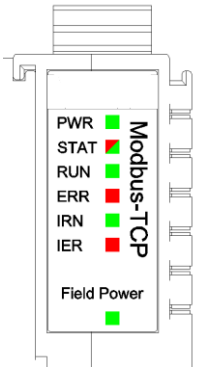

PWR Power State (GREEN)	Definition
ON	System Power Normal
OFF	System Power Failure
STAT Module State (RED/GREEN)	Definition
Double Flash (RED)	Module Soft Restarted by Hard-Fault
ON(GREEN)	Running
Single Flash (GREEN)	Stopping
Flash(2.5Hz) (RED/GREEN)	Boot Mode
Flash(10Hz) (RED/GREEN)	Firmware Updating
RUN Network State (GREEN)	Definition
ON	Modbus connected
OFF	Modbus disconnected
Flash	Modbus read-write
Quadruple Flash	Led test
Flash(10Hz)	MAC address error
ERR Network Error (RED)	Definition
Flash(2.5Hz)	LAN1 and LAN2 Link-Down
OFF	LAN1 or LAN2 Link-Up
Flash(10Hz)	MAC Address Error
IRN IO Run (GREEN)	Definition
ON	IO initialization normal
OFF	IO initialization failure
IER IO Error (RED)	Definition
OFF	IO communication normal
Double Flash	IO communication failure
Field Power State (GREEN)	Definition
ON	Field Power Normal
OFF	Field Power Failure

4 Wiring

4 Wiring

Please note when wiring: for the internal construction, two terminals of SV+ have been short-connected, two terminals of SV- have been short-connected, two terminals of FV+ have been short-connected, and two terminals of FV- have been short-connected. For external it only needs to access one system power supply and one field power supply.

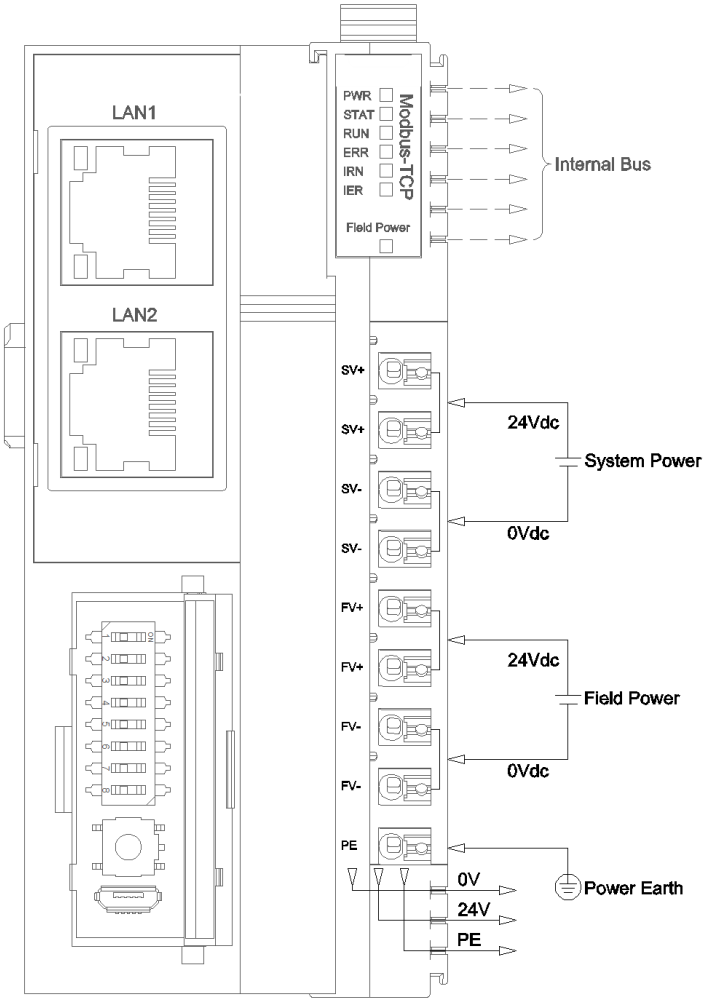

5 Process data definition

Adapter process data definition

Modbus-TCP adapter itself has no input-output process data.

IO Module process data mapping

The network adapter reads and writes input and output process data of IO module in real time through the internal bus, and its data mapping model is shown as follow:

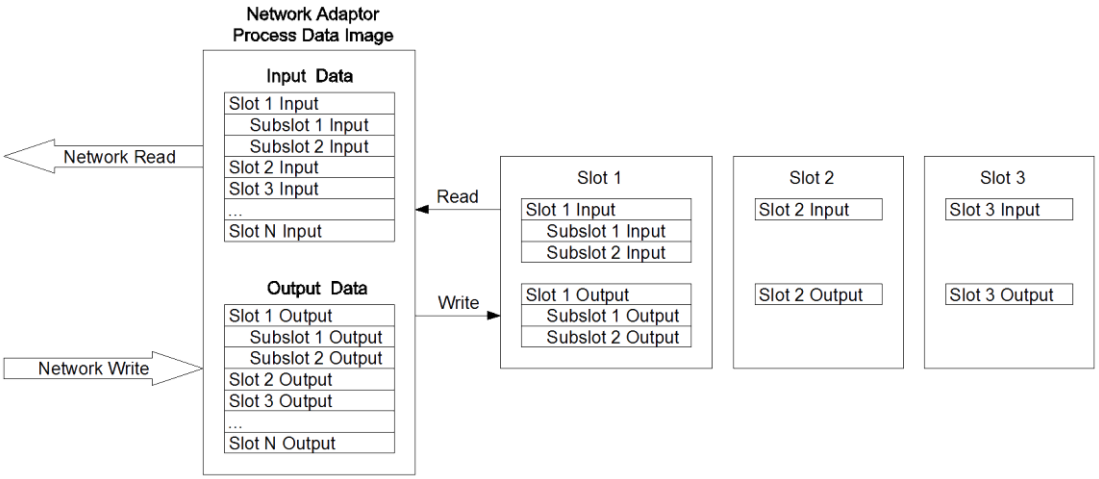

Modbus address mapping table varies according to module combination, and the I/O module address mapping table carried by ND-8031 has two modes.

In the 1st mode, it could use the IOConfig configured software to check whether DI is mapped to area 1, DO is mapped to area 0, AI is mapped to area 3, and AO is mapped to area 4. For special module addresses, it could check the address table in the IOConfig configured software.

In another mode, DI, DO, AI, AO, and special module addresses are all mapped to area 4, and they are corresponding to different address ranges respectively. The addresses of special modules are sorted backwards in sequence referred to the address table in IOConfig. And the mapping address ranges are shown in the following table.

Module Type	Address Offset		Read/Write
	Hex	Decimal	
AO	0x0000	0	read & write
DO	0x3000	12288	read & write
AI	0x4000	16384	read only
DI	0x5000	20480	read only

6 Configuration Parameter Definition

Configuration Parameter								
Bit No	Bit 7	Bit 6	Bit 5	Bit 4	Bit 3	Bit 2	Bit 1	Bit 0
Byte 0	Reserved			Sniffer Port	Port Mirroring	Reserved	Fault Action for Input	Source of Config Data
Byte 1	MAC Address [0]							
Byte 2	MAC Address [1]							
Byte 3	MAC Address [2]							
Byte 4	MAC Address [3]							
Byte 5	MAC Address [4]							
Byte 6	MAC Address [5]							
Byte 7	IP Address [0]							
Byte 8	IP Address [1]							
Byte 9	IP Address [2]							
Byte 10	IP Address [3]							
Byte 11	Net Mask [0]							
Byte 12	Net Mask [1]							
Byte 13	Net Mask [2]							
Byte 14	Net Mask [3]							
Byte 15	Net Gateway [0]							
Byte 16	Net Gateway [1]							
Byte 17	Net Gateway [2]							
Byte 18	Net Gateway [3]							
Byte 19	Modbus Port							
Byte 20								
Byte 21	Reserved							Watchdog
Byte 22	Watchdog Time(s)							
Byte 23								

Data description:

Source of Config Data： Parameter configuration mode (Default: 0)

0：Configuration Software

Fault Action for Input： Input fault handling mode, when IO module is offline, the adapter will process IO module input data according to this mode.

0：Hold Last Input Value

1：Clear Input Value

Port Mirroring： The port mirroring function could mirror the message of adapter network data to LAN1 or LAN2 for output. (Default: 0)

0：Disable

1：Enable

Sniffer Port： Mirror port, which is used to monitor adapter network message data when port mirror function is enabled. (Default: 0)

0：LAN1

1：LAN2

MAC Address: MAC address, read-only property.

IP Address: Adapter IP address, when the value of the dial-code switch is not 0, the last byte of the IP address is replaced by the dial-code value.

Net Mask: Subnet mask.

Net Gateway: Gateway address.

Modbus Port: Modbus-TCP server port number. (Default: 502)

Watchdog: Modbus watchdog. (Default: 1)

0：Disable

1：Enable

Watchdog Time(s): Modbus application watchdog period, when the watchdog is enabled, if there is no Modbus data exchange on the TCP connection in this period, the TCP connection will be disconnected (other TCP connections with data exchange will be remained normally). (Default: 30)

7. System diagnostic area

System diagnostic area is divided into two parts.

The first part: "State input" storage area, address 0x2000 ~ 0x2068, a total of 105 Word.

No.	Storage Type	Description	Storage Capacity	Address Range	Read-write
1	3 Area	System diagnosis - Status input	105 Word	0x2000~0x2068	RO

Modbus client monitors the address area 0x2000~0x2068 by calling Modbus 04 function code to obtain the current working status and error code of the adapter and IO module, the data format is shown as below:

No.	Modbus Address (Decimalism)	Address (Hexadecimal)	Data Name	Description
1	8192	0x2000	Reset Mode	Reset State*
2	8193	0x2001	Reserve	
3	8194	0x2002	DIP switch value	
4	8195	0x2003	Running time - Second	
5	8196	0x2004	Running time - Minute	
6	8197	0x2005	Running time - Hour	
7	8198	0x2006	Running time - Day	
8	8199	0x2007	MAC	Current Device MAC
9	8200	0x2008		
10	8201	0x2009		
11	8202	0x200A	IP	Current Device IP
12	8203	0x200B		
13	8204	0x200C	MASK	Current Device MASK
14	8205	0x200D		
15	8206	0x200E	GATEWAY	Current Device GATEWAY
16	8207	0x200F		
17	8208	0x2010	DI-size	Discrete quantity input area data size
18	8209	0x2011	DO-size	Coil output area data size
19	8210	0x2012	AI-size	Input register area data size
20	8211	0x2013	AO-size	Holding register area data size
21	8212	0x2014	Config-Client-IP	Configured client IP

22	8213	0x2015		
23	8214	0x2016	Config-Client-Port	Configured client port
24	8215	0x2017	Modbus-Client-Number	Connected Modbus client number
25	8216	0x2018	Modbus-Client-1-IP	Client 1-IP
26	8217	0x2019		
27	8218	0x201A	Modbus-Client-1-Port	Client 1-Port
28	8219	0x201B	Modbus-Client-2-IP	Client 2-IP
29	8220	0x201C		
30	8221	0x201D	Modbus-Client-2-Port	Client 2-Port
31	8222	0x201E	Modbus-Client-3-IP	Client 3-IP
32	8223	0x201F		
33	8224	0x2020	Modbus-Client-3-Port	Client 3-Port
34	8225	0x2021	Modbus-Client-4-IP	Client 4-IP
35	8226	0x2022		
36	8227	0x2023	Modbus-Client-4-Port	Client 4-Port
37	8228	0x2024	Modbus-Client-5-IP	Client 5-IP
38	8229	0x2025		
39	8230	0x2026	Modbus-Client-5-Port	Client 5-Port
40	8231	0x2027	Module_Error[0]	Module 0 error code
41	8232	0x2028		
42	8233	0x2029	Module_Error[1]	Module 1 error code
43	8234	0x202A		
44	8235	0x202B	Module_Error[2]	Module 2 error code
45	8236	0x202C		
46	8237	0x202D	Module_Error[3]	Module 3 error code
47	8238	0x202E		
48	8239	0x202F	Module_Error[4]	Module 4 error code
49	8240	0x2030		
50	8241	0x2031	Module_Error[5]	Module 5 error code
51	8242	0x2032		
52	8243	0x2033	Module_Error[6]	Module 6 error code
53	8244	0x2034		
54	8245	0x2035	Module_Error[7]	Module 7 error code
55	8246	0x2036		
56	8247	0x2037	Module_Error[8]	Module 8 error code
57	8248	0x2038		
58	8249	0x2039	Module_Error[9]	Module 9 error code
59	8250	0x203A		
60	8251	0x203B	Module_Error[10]	Module 10 error code

61	8252	0x203C		
62	8253	0x203D	Module_Error[11]	Module 11 error code
63	8254	0x203E		
64	8255	0x203F	Module_Error[12]	Module 12 error code
65	8256	0x2040		
66	8257	0x2041	Module_Error[13]	Module 13 error code
67	8258	0x2042		
68	8259	0x2043	Module_Error[14]	Module 14 error code
69	8260	0x2044		
70	8261	0x2045	Module_Error[15]	Module 15 error code
71	8262	0x2046		
72	8263	0x2047	Module_Error[16]	Module 16 error code
73	8264	0x2048		
74	8265	0x2049	Module_Error[17]	Module 17 error code
75	8266	0x204A		
76	8267	0x204B	Module_Error[18]	Module 18 error code
77	8268	0x204C		
78	8269	0x204D	Module_Error[19]	Module 19 error code
79	8270	0x204E		
80	8271	0x204F	Module_Error[20]	Module 20 error code
81	8272	0x2050		
82	8273	0x2051	Module_Error[21]	Module 21 error code
83	8274	0x2052		
84	8275	0x2053	Module_Error[22]	Module 22 error code
85	8276	0x2054		
86	8277	0x2055	Module_Error[23]	Module 23 error code
87	8278	0x2056		
88	8279	0x2057	Module_Error[24]	Module 24 error code
89	8280	0x2058		
90	8281	0x2059	Module_Error[25]	Module 25 error code
91	8282	0x205A		
92	8283	0x205B	Module_Error[26]	Module 26 error code
93	8284	0x205C		
94	8285	0x205D	Module_Error[27]	Module 27 error code
95	8286	0x205E		
96	8287	0x205F	Module_Error[28]	Module 28 error code
97	8288	0x2060		
98	8289	0x2061	Module_Error[29]	Module 29 error code
99	8290	0x2062		
100	8291	0x2063	Module_Error[30]	Module 30 error code

101	8292	0x2064		
102	8293	0x2065	Module_Error[31]	Module 31 error code
103	8294	0x2066		
104	8295	0x2067	Module_Error[32]	Module 32 error code
105	8296	0x2068		

*Reset state Register 38193 address data format is shown as below:

Addres offset	Aaddress name	Description	Power on default value
Bit 0	Power_On_Reset	Power on reset	0/1
Bit 1-3	Reserved	Reserved	0
Bit 4	External_Reset	External Reset	0/1
Bit 5	Reserved	Reserved	0
Bit 6	Soft_Reset_Request	Soft Reset	0
Bit 7	Reserved	Reserved	0
Bit 8	HardFault	Hard Fault Reset	0
Bit 9	StackOver	Stack Over Reset	0
Bit 10	MemoryOver	Memory Over Reset	0
Bit 11-15	Reserved	Reserved	0

The second part："Control Output" storage area, address 0x2000, a total of 1 Word.

No.	Storage Type	Description	Storage Capacity	Address Range	Read-write
1	4 Area	System diagnosis - Control output	1 Word	0x2000	RW

The Modbus client controls the address 0x2000 by calling Modbus 06/16 function code to implement block reset or port mirroring control.

Register 408193 address data format is shown as below:

Addres offset	Address Name	Description	Value range	Default value
Bit 0	Restart	0->1 Rising edge triggering system reset	0-1	0
Bit1	Port_mirror	Port mirroring function enable 0: disabled 1: enable	0-1	0: disabled
Bit 2	Sniffer_port	Mirror port selection 0:LAN1 1:LAN2	0-1	0:LAN1
Bit 3-15	Reseived	Reserved	0	0

A Dimension drawing

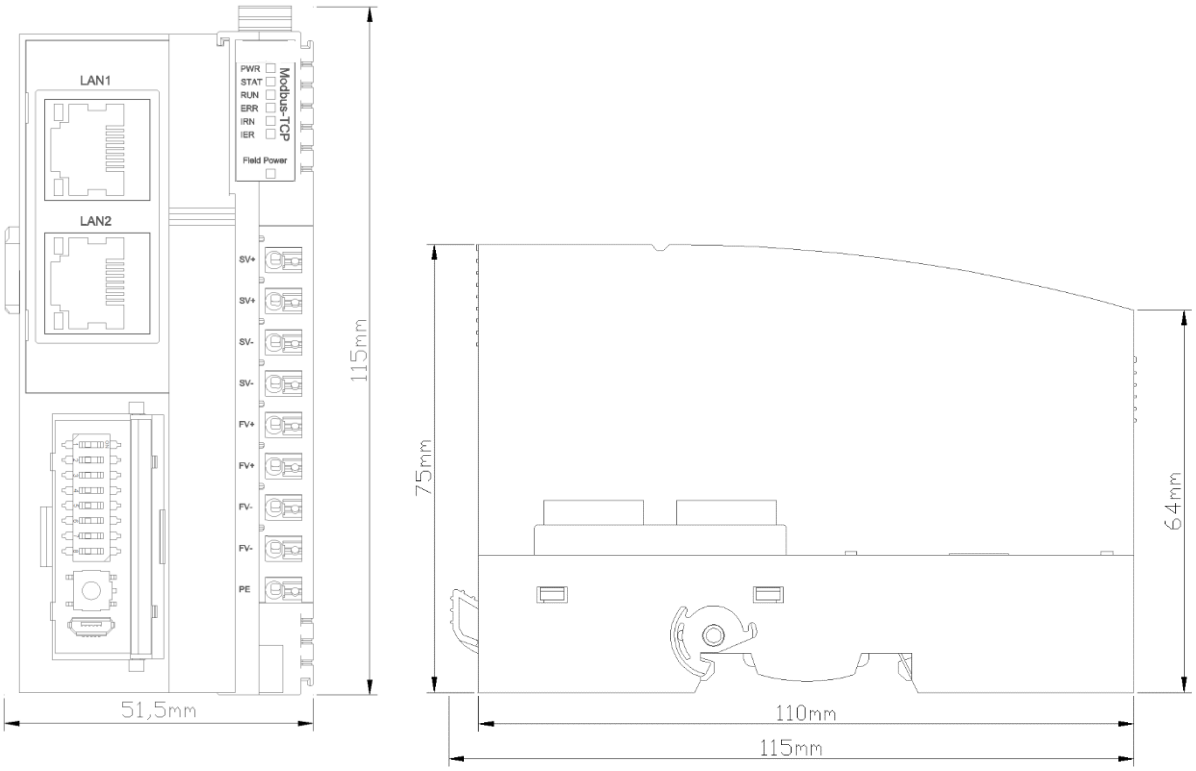

ND-8032 Profinet Network Adapter

1 The module overview

The ND-8032 Profinet network adapter supports standard Profinet IO Device Communication. The adapter supports MRP media redundancy, and it could realize ring network redundancy. And it supports RT/IRT real-time and synchronous communication mode, with its RT real-time communication minimum period of 1ms and IRT synchronous communication minimum period of 250us.The adapter supports a maximum input of 1440 bytes, a maximum output of 1440 bytes, and the number of the extended IO modules it supports is 32.

2 Technical Parameters

Hardware Speciÿcation	
System Power	Nominal: 24Vdc, Range: 9-36Vdc Protection: Overcurrent Protection, Reverse Protection: YES
Power Consumption	110mA@24Vdc
Current Output	Max:2A@5Vdc
Isolation	System Power to Field Power Isolation
Field Power	Nominal: 24Vdc, Range: 22-28Vdc
Field Power Current	Max DC 8A
IO Modules Supported	32 pcs
Wiring	Max.1.0mm² (AWG 17)
Mounting Type	35mm DIN-Rail
Size	115*51.5*75mm
Weight	130g
Environment Speciÿcation	
Operational Temperature	-40~85
Operational Humidity	5%-95% (No Condensation)
Ingress Protection Rating	IP20
Proÿnet Parameter	
Protocol	Proÿnet IO Device
I/O Data Size	Input Max 1440 Bytes, Output Max 1440 Bytes
RT	Supported, Min.1ms
IRT	Supported, Min.250us
MRP	Supported
MRPD	Not supported
Network Interface	2*RJ45
Speed	10/100Mbps, MDI/MIDX, Full-Duplex
Max bus distance	100m
Proÿnet Device Name	DIP switch setting or Proÿnet monitor modifying

Notice: The adapter doesnot support the MRPD (Media Redundancy for Planned Duplication) function, so the MRP and IRT functions cannot be used simultaneously.

3 Hardware Interface

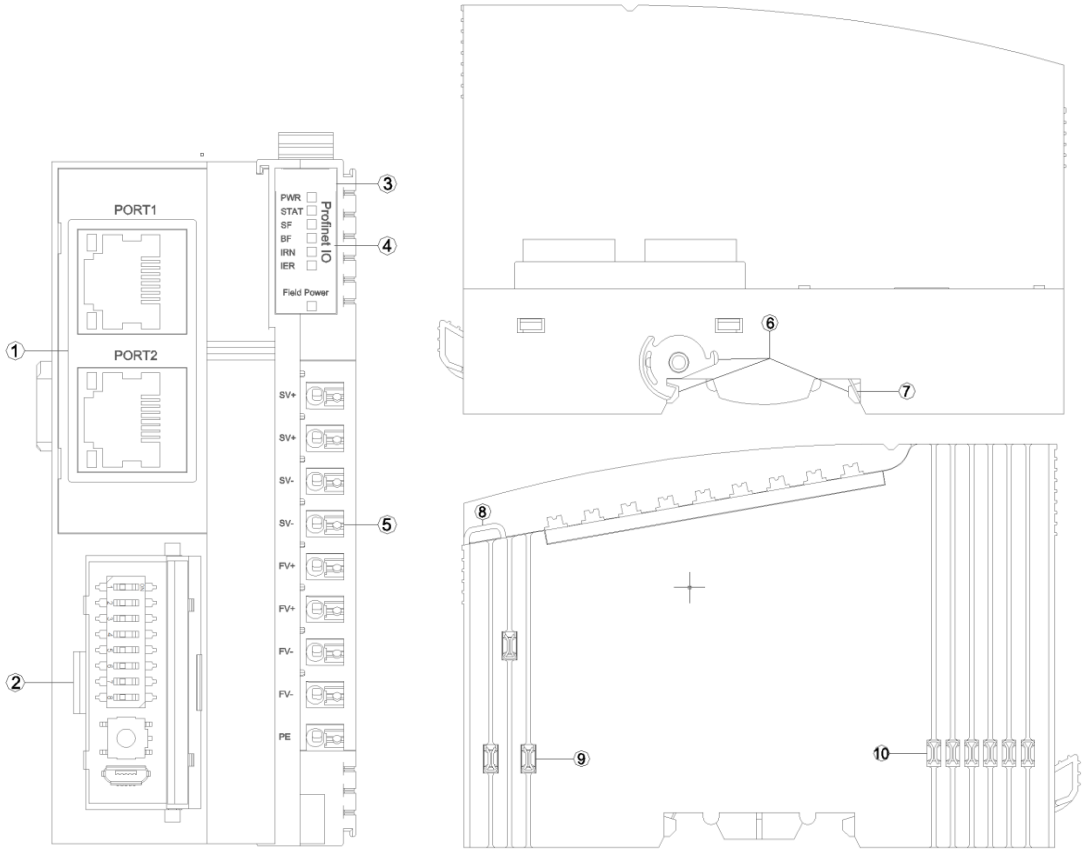

① Network Interface

② Config Interface

③ Module Type

④ LED Indicator

⑤ Wiring Terminal

⑥ Buckle

⑦ Grounding Spring Sheet

⑧ Fixed Wiring Harness

⑨ Field Power

⑩ Internal Bus

3.1 Network Interface

PORT1 and PORT2 are both Profinet communication port, and support switch function with 10Mbps and 100Mbps data rates, MDI/MID-X auto crossover.

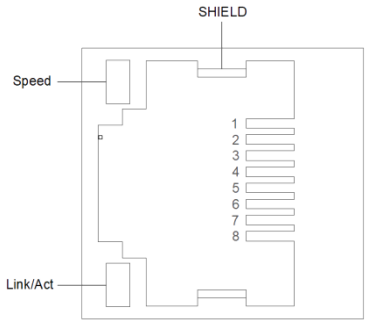

Speed: Network Speed LED (Green)

ON: 100Mbps

OFF: 10Mbps

Link/Act: Link State、Active State(Orange)

ON: Link UP

OFF: Link DOWN

Flash: Active

SHIELD: RJ45 Shield Interface

RJ45 Pin definition

Pin	Definition	Description
1	TD+	Transmitter Signal Positive
2	TD-	Transmitter Signal Negative
3	RD+	Receiver Signal Positive
4	--	--
5	--	--
6	RD-	Receiver Signal Negative
7	--	--
8	--	--

3.2 Configuration Interface

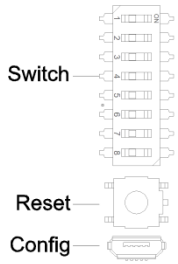

Switch: The DIP switch is used to set the name of Profinet device.

When the DIP switch value is 0, the device default name is cn8032-addr, and it could use Profinet monitor to set the device name online.

When the dial-code switch value is not 0, the device name is determined by the value of the DIP switch. The relationship between the device name and the dial value is shown in the following table:

Switch Bit Number(ON:1,OFF:0)								Switch Value	Profinet Deice Name
1	2	3	4	5	6	7	8		
0	0	0	0	0	0	0	0	0	Configured By Software (Default:cn8032-addr)
1	0	0	0	0	0	0	0	1	cn8032-1
0	1	0	0	0	0	0	0	2	cn8032-2
.	.	.	.	.	.	.	.	.	.
0	1	0	1	0	0	0	0	10	cn8032-10
.	.	.	.	.	.	.	.	.	.
0	1	1	1	1	1	1	1	254	cn8032-254
1	1	1	1	1	1	1	1	255	cn8032-255
Description: Factory default dial code value is 0, the device name is cn8032-addr.									

Reset: Module reset button. All parameters of the module will be restored to the default value after pressing the button for more than 5 seconds. When the Reset button is

pressed, a green LED will light up in the upper left corner of the button.

Config: Configure port, a standard Micro USB interface for configuring device parameters and firmware upgrades.

Description: device parameters can be set in Profinet IO controller configuration software.

3.3 LED Indicators

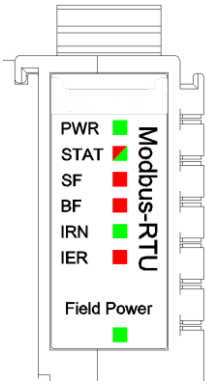

PWR Power State (GREEN)	Definition
ON	System Power Normal
OFF	System Power Failure
STAT Module State (RED/GREEN)	Definition
Double Flash (RED)	Module Soft Restart by Hard-Fault
ON(GREEN)	Operating
Single Flash (GREEN)	Stopping
Flash(2.5Hz) (RED/GREEN)	Boot Mode
Flash(10Hz) (RED/GREEN)	Firmware Update
SF System Failure (RED)	Definition
OFF	Normal
ON	System Failure, Topology Error
Flash	Led light test
Flash(10Hz)	MAC address error
BF Bus Failure (RED)	Definition
ON	Port1 and Port2 Link-Down
Flash(2.5Hz)	Offline mode
OFF	Online mode
Flash(10Hz)	MAC address error
IRN IO RUN(GREEN)	Definition
ON	IO initialization normal
OFF	IO initialization failure
IER IO Error (RED)	Definition
OFF	IO communication normal
Double Flash	IO communication failure

Field Power State (GREEN)	Definition
ON	Field Power Normal
OFF	Field Power Failure

4 Wiring

Please note when wiring: for the internal construction, two terminals of SV+ have been short-connected, two terminals of SV- have been short-connected, two terminals of FV+ have been short-connected, and two terminals of FV- have been short-connected. For external it only needs to access one system power supply and one field power supply.

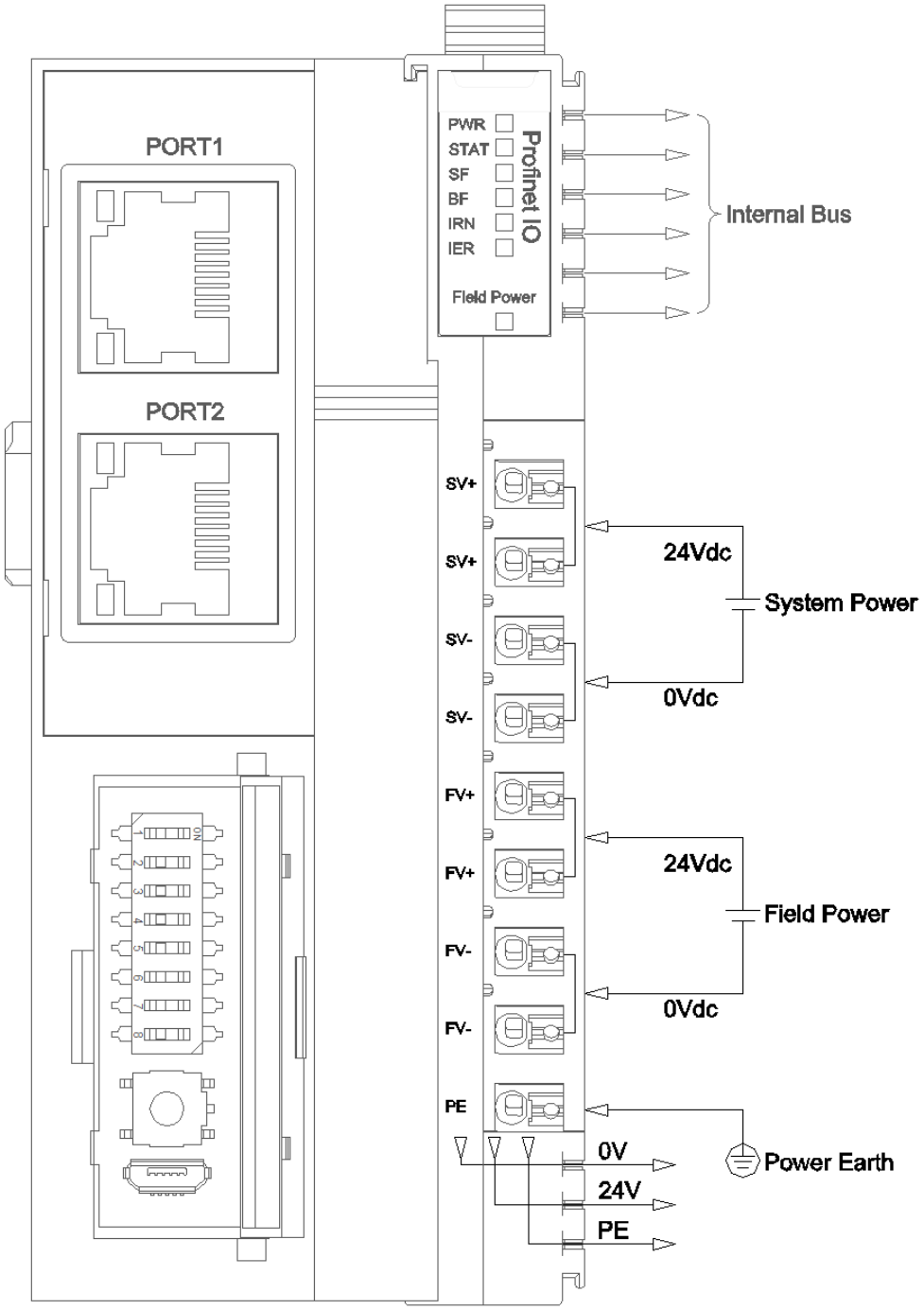

5 Process data definition

5.1 Adapter process data definition

Profinet adapter itself has no input-output process data.

5.2 IO module process data mapping

The network adapter reads and writes input and output process data of IO module in real time through the internal bus, and its data mapping model is shown as follow:

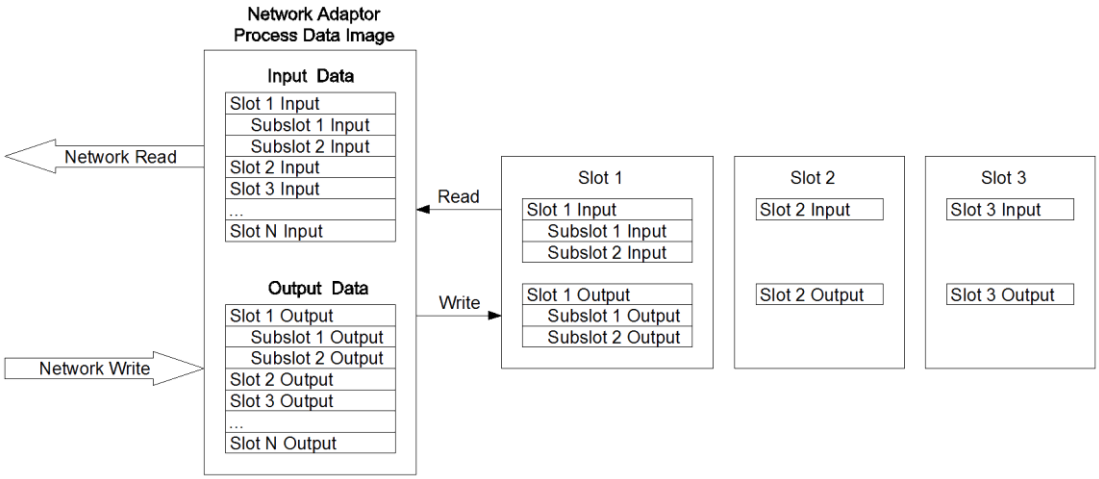

The maximum number of input bytes of the Profinet network adapter is 1440 bytes, and the maximum number of output bytes is 1440 bytes.

6 Configuration parameters definition

Configuration parameters								
Bit No	Bit 7	Bit 6	Bit 5	Bit 4	Bit 3	Bit 2	Bit 1	Bit 0
Byte 0	Reserved					Fault Action for Output	Fault Action for Input	Source of Config Data
Byte 1	MAC Address [0]							
Byte 2	MAC Address [1]							
Byte 3	MAC Address [2]							
Byte 4	MAC Address [3]							
Byte 5	MAC Address [4]							
Byte 6	MAC Address [5]							
Byte 7	IP Address [0]							
Byte 8	IP Address [1]							
Byte 9	IP Address [2]							
Byte 10	IP Address [3]							
Byte 11	Net Mask [0]							
Byte 12	Net Mask [1]							
Byte 13	Net Mask [2]							
Byte 14	Net Mask [3]							
Byte 15	Net Gateway [0]							
Byte 16	Net Gateway [1]							
Byte 17	Net Gateway [2]							
Byte 18	Net Gateway [3]							
Byte 19 ... Byte 82	Profinet Device Name							

Data description:

Source of Config Data：Parameter configuration mode (Default: 1)

0：Configure software

1：Field Bus

Fault Action for Input：Input fault handling mode, when IO module is offline, the adapter will process IO module input data according to this mode. (Default: 0)

0：Hold Last Input Value

1：Clearing Input Value

Fault Action for Output：Output fault handling mode，when the fieldbus is

offline the adapter will process the IO module output data according to this mode. (Default: 1)

0：Hold Last Output Value

1：Clearing Output Value

MAC Address： MAC address, read-only attribute.

IP Address： IP address, read-only attribute.

Net Mask： Subnet mask, read-only attribute.

Net Gateway: Gateway address, read-only attribute.

Profinet Device Name: Profinet device name, read-only attribute. (Device name is determined by the DIP switch)

A Dimension drawing

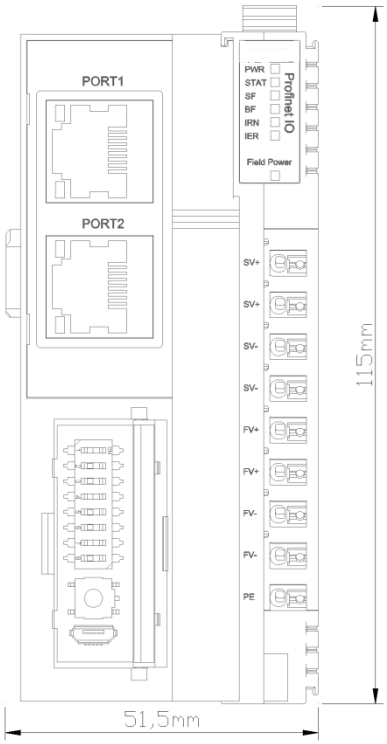

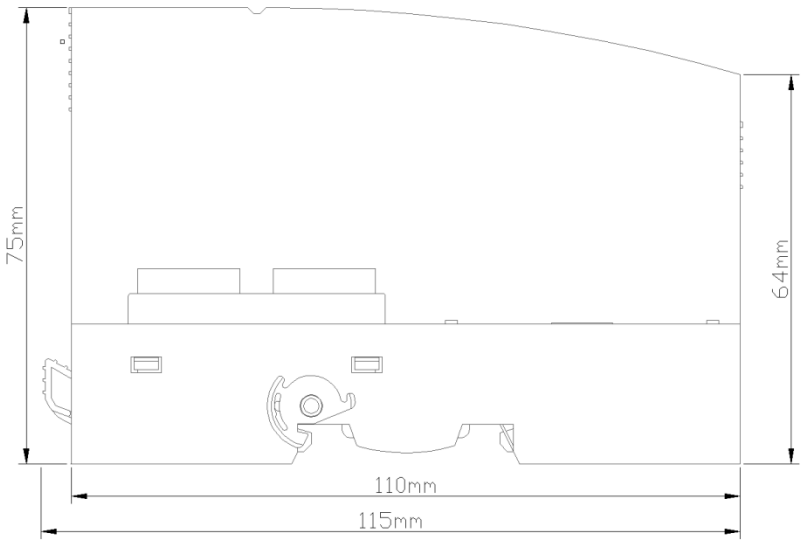

ND-8032-L Profinet Network Adapter

1 The module overview

The ND-8032-L Profinet network adapter supports standard Profinet IO Device Communication. **The adapter supports no MRP redundancy, and no ring network redundancy.** And it supports RT real-time communication mode, with its RT real-time communication minimum period of 1ms.The adapter supports a maximum input of 1440 bytes, a maximum output of 1440 bytes, and the number of the extended IO modules it supports is 32.

2 Technical Parameters

Hardware Specification	
System Power	Nominal: 24Vdc, Range: 9-36Vdc Protection: Overcurrent Protection, Reverse Protection: YES
Power Consumption	110mA@24Vdc
Current Output	Max:2A@5Vdc
Isolation	System Power to Field Power Isolation
Field Power	Nominal: 24Vdc, Range: 22-28Vdc
Field Power Current	Max DC 8A
IO Modules Supported	32 pcs
Wiring	Max.1.0mm² (AWG 17)
Mounting Type	35mm DIN-Rail
Size	115*51.5*75mm
Weight	130g
Environment Specification	
Operational Temperature	-40~85℃
Operational Humidity	5%-95% (No Condensation)
Ingress Protection Rating	IP20
Profinet Parameter	
Protocol	Profinet IO Device
I/O Data Size	Input Max 1440 Bytes, Output Max 1440 Bytes
RT	Supported, Min.1ms
IRT	**Not supported**
MRP	**Not supported**
MRPD	Not supported
Network Interface	2*RJ45
Speed	10/100Mbps, MDI/MIDX, Full-Duplex
Max bus distance	100m
Profinet Device Name	DIP switch setting or Profinet monitor modifying

3 Hardware Interface

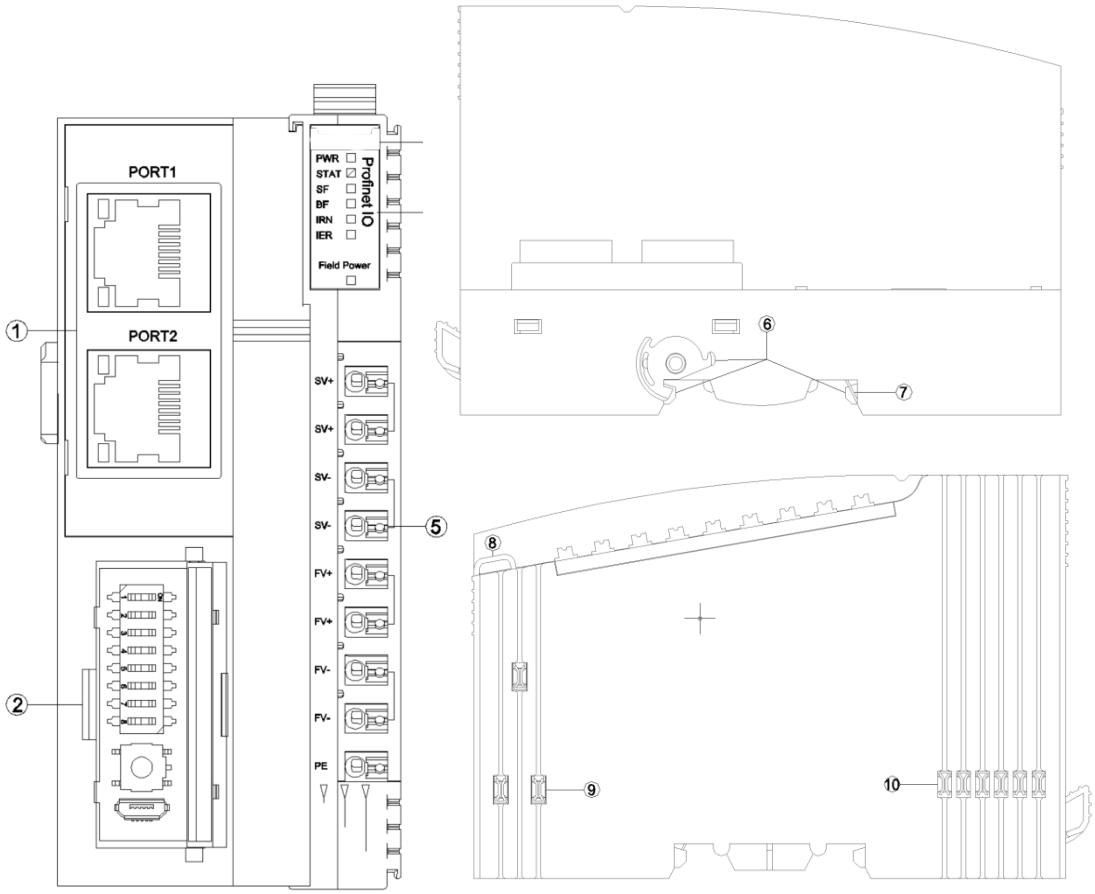

① Network Interface

② Config Interface

③ Module Type

④ LED Indicator

⑤ Wiring Terminal

⑥ Buckle

⑦ Grounding Spring Sheet

⑧ Fixed Wiring Harness

⑨ Field Power

⑩ Internal Bus

3.1 Network Interface

PORT1 and PORT2 are both Profinet communication port, and support switch function with 10Mbps and 100Mbps data rates, MDI/MID-X auto crossover.

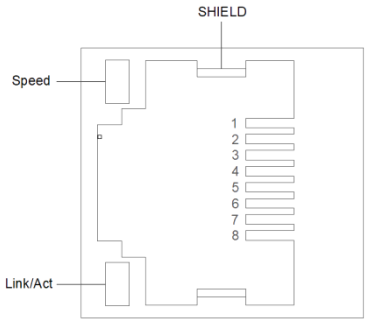

Speed: Network Speed LED (Green)

ON: 100Mbps

OFF: 10Mbps

Link/Act: Link State、Active State(Orange)

ON: Link UP

OFF: Link DOWN

Flash: Active

SHIELD: RJ45 Shield Interface

RJ45 Pin definition

Pin	Definition	Description
1	TD+	Transmitter Signal Positive
2	TD-	Transmitter Signal Negative
3	RD+	Receiver Signal Positive
4	--	--
5	--	--
6	RD-	Receiver Signal Negative
7	--	--
8	--	--

3.2 Configuration Interface

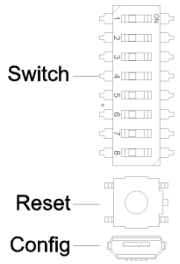

Switch: The DIP switch is used to set the name of Profinet device.

When the DIP switch value is 0, the device default name is cn8032-addr, and it could use Profinet monitor to set the device name online.

When the dial-code switch value is not 0, the device name is determined by the value of the DIP switch. The relationship between the device name and the dial value is shown in the following table:

Switch Bit Number(ON:1,OFF:0)								Switch Value	Profinet Deice Name
1	2	3	4	5	6	7	8		
0	0	0	0	0	0	0	0	0	Configured By Software (Default:cn8032-addr)
1	0	0	0	0	0	0	0	1	cn8032-1
0	1	0	0	0	0	0	0	2	cn8032-2
.	.	.	.	.	.	.	.	.	.
0	1	0	1	0	0	0	0	10	cn8032-10
.	.	.	.	.	.	.	.	.	.
0	1	1	1	1	1	1	1	254	cn8032-254
1	1	1	1	1	1	1	1	255	cn8032-255
Description: Factory default dial code value is 0, the device name is cn8032-addr.									

Reset: Module reset button. All parameters of the module will be restored to the default value after pressing the button for more than 5 seconds. When the Reset button is pressed, a green LED will light up in the upper left corner of the button.

Config: Configure port, a standard Micro USB interface for configuring device parameters and firmware upgrades.

Description: device parameters can be set in Profinet IO controller configuration software.

3.3 LED Indicators

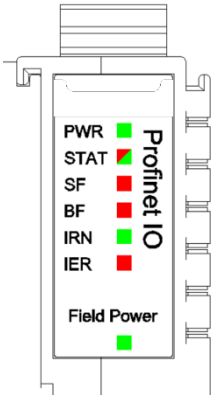

PWR Power State (GREEN)	Definition
ON	System Power Normal
OFF	System Power Failure
STAT Module State (RED/GREEN)	Definition
Double Flash (RED)	Module Soft Restart by Hard-Fault
ON(GREEN)	Operating
Single Flash (GREEN)	Stopping
Flash(2.5Hz) (RED/GREEN)	Boot Mode
Flash(10Hz) (RED/GREEN)	Firmware Update
SF System Failure (RED)	Definition
OFF	Normal
ON	System Failure, Topology Error
Flash	Led light test
Flash(10Hz)	MAC address error
BF Bus Failure (RED)	Definition
ON	Port1 and Port2 Link-Down
Flash(2.5Hz)	Offline mode
OFF	Online mode
Flash(10Hz)	MAC address error
IRN IO RUN(GREEN)	Definition
ON	IO initialization normal
OFF	IO initialization failure
IER IO Error (RED)	Definition
OFF	IO communication normal
Double Flash	IO communication failure

Field Power State (GREEN)	Definition
ON	Field Power Normal
OFF	Field Power Failure

4 Wiring

Please note when wiring: for the internal construction, two terminals of SV+ have been short-connected, two terminals of SV- have been short-connected, two terminals of FV+ have been short-connected, and two terminals of FV- have been short-connected. For external it only needs to access one system power supply and one field power supply.

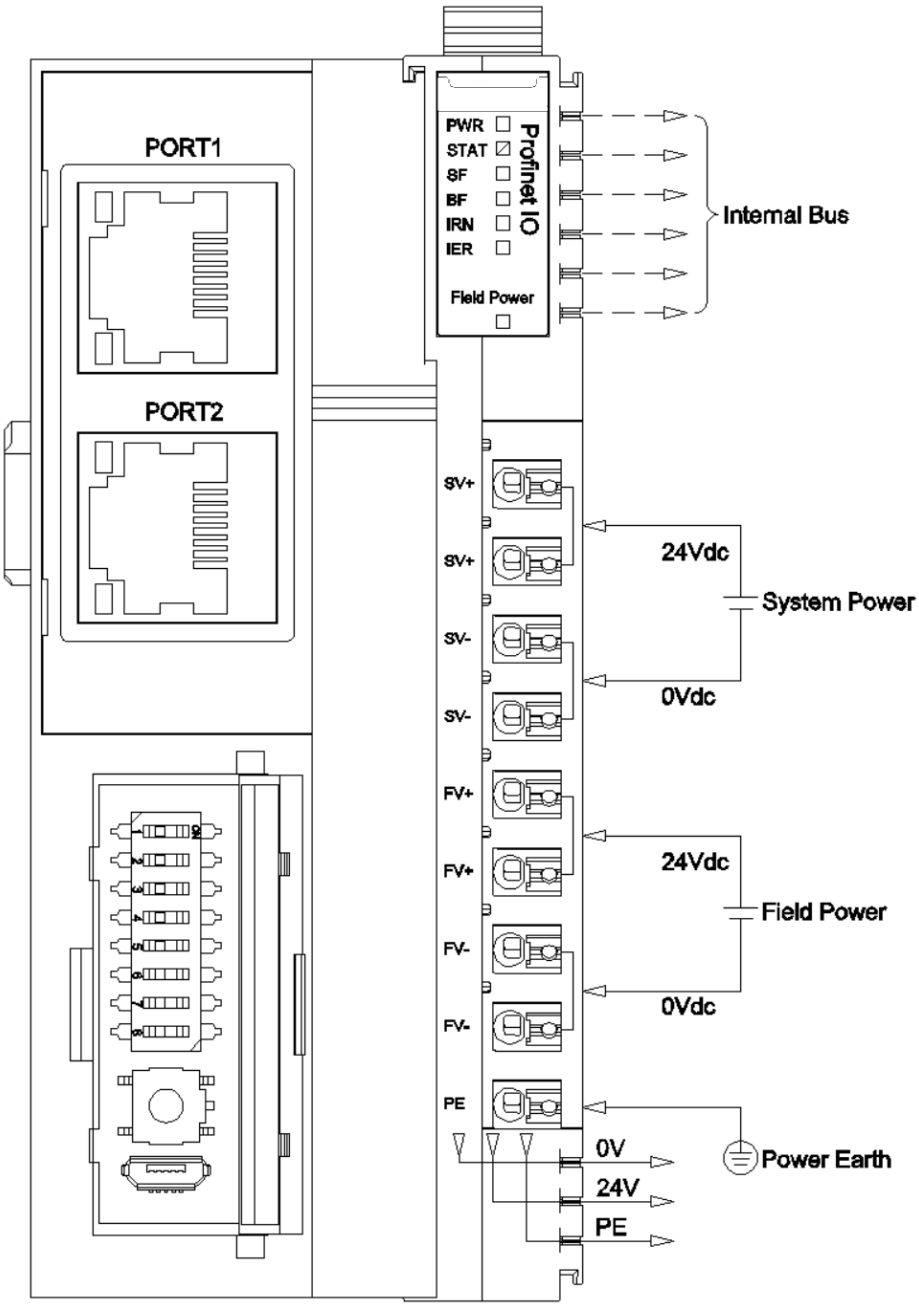

5 Process data definition

5.1 Adapter process data definition

Profinet adapter itself has no input-output process data.

5.2 IO module process data mapping

The network adapter reads and writes input and output process data of IO module in real time through the internal bus, and its data mapping model is shown as follow:

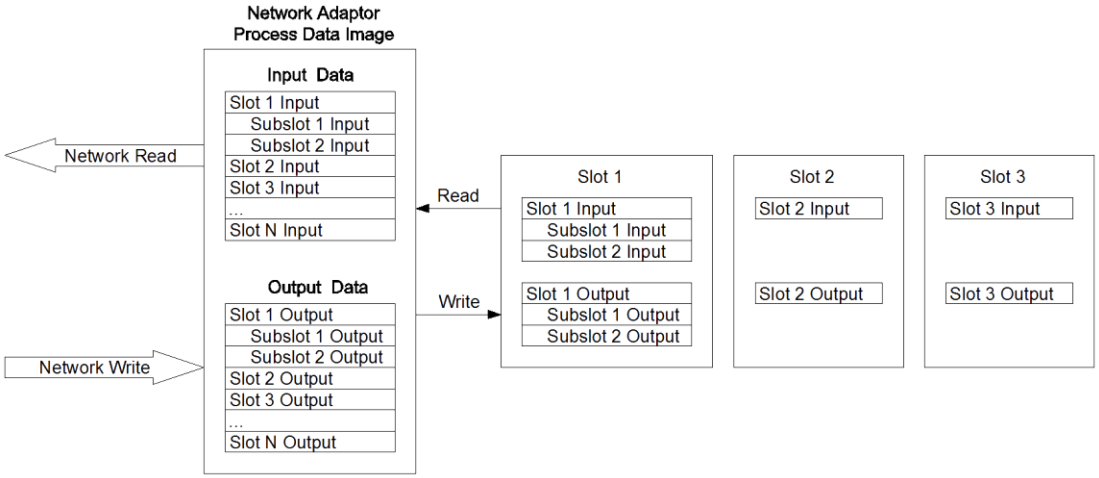

The maximum number of input bytes of the Profinet network adapter is 1440 bytes, and the maximum number of output bytes is 1440 bytes.

6 Configuration parameters definition

Configuration parameters								
Bit No	Bit 7	Bit 6	Bit 5	Bit 4	Bit 3	Bit 2	Bit 1	Bit 0
Byte 0	Reserved					Fault Action for Output	Fault Action for Input	Source of Config Data
Byte 1	MAC Address [0]							
Byte 2	MAC Address [1]							
Byte 3	MAC Address [2]							
Byte 4	MAC Address [3]							
Byte 5	MAC Address [4]							
Byte 6	MAC Address [5]							
Byte 7	IP Address [0]							
Byte 8	IP Address [1]							
Byte 9	IP Address [2]							
Byte 10	IP Address [3]							
Byte 11	Net Mask [0]							
Byte 12	Net Mask [1]							
Byte 13	Net Mask [2]							
Byte 14	Net Mask [3]							
Byte 15	Net Gateway [0]							
Byte 16	Net Gateway [1]							
Byte 17	Net Gateway [2]							
Byte 18	Net Gateway [3]							
Byte 19 ... Byte 82	Profinet Device Name							

Data description:

Source of Config Data：Parameter configuration mode (Default: 1)

0：Configure software

1：Field Bus

Fault Action for Input：Input fault handling mode, when IO module is offline, the adapter will process IO module input data according to this mode. (Default: 0)

0：Hold Last Input Value

1：Clearing Input Value

Fault Action for Output：Output fault handling mode，when the fieldbus is offline the adapter will process the IO module output data according to this mode. (Default: 1)

0：Hold Last Output Value

1：Clearing Output Value

MAC Address：MAC address, read-only attribute.

IP Address：IP address, read-only attribute.

Net Mask：Subnet mask, read-only attribute.

Net Gateway: Gateway address, read-only attribute.

Profinet Device Name: Profinet device name, read-only attribute. (Device name is determined by the DIP switch)

A Dimension drawing

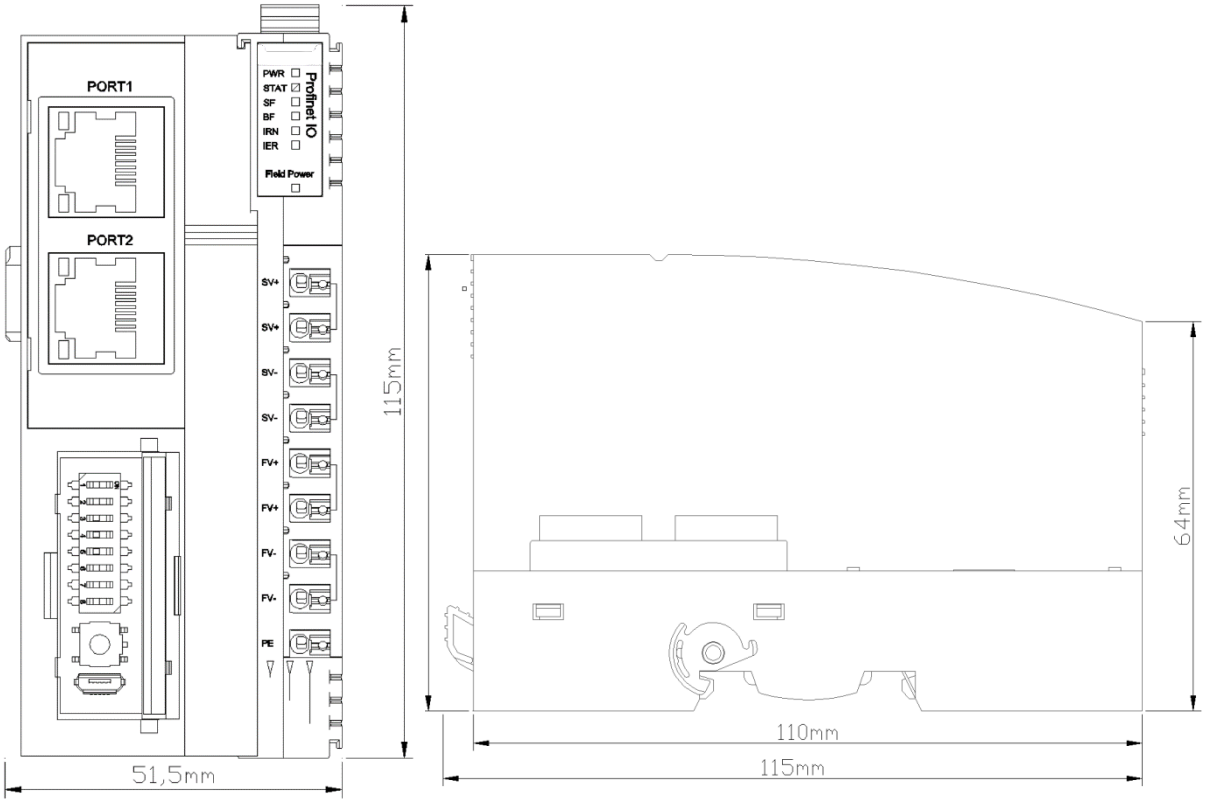

ND-8033 EtherCAT Network Adapter

1 The module overview

The ND-8033 EtherCAT I/O module supports standard EtherCAT protocol access. The adapter supports a Max. input of 1024 bytes and a Max. output of 1024 bytes. It supports 32 pcs of extended IO modules.

2 Technical Parameters

Hardware Specification	
System Power	Nominal: 24Vdc, Range: 9-36Vdc Protection: Overcurrent Protection, Reverse Protection: YES
Power Consumption	110mA@24Vdc
Internal BUS Supply Current	Max：2A@5VDC
Isolation	System Power to Field Power Isolation
Field Power Supply	Power Supply：22~28V （Nominal 24VDC）
Field Power Supply Current	Max. DC 8A
I/O Modules supported	32 pcs
Wiring	Max.1.0mm² (AWG 17)
Mounting Type	35mm Size DIN-Rail
Size	115*51.5*75mm
Weight	130g
Environment Specification	
Operational Temperature	-40~85°C
Operational Humidity	5%~95% RH(No Condensation)
Ingress Protection Rating	IP20
EtherCAT Parameter	
Protocol	EtherCAT
Process data area	Input Max.1024 Bytes, Output Max.1024 Bytes
Network Interface	2 *RJ45
Speed	10/100Mbps, MDI/MIDX, Full-Duplex
Max.Bus Legenth	100m

A Dimension drawing

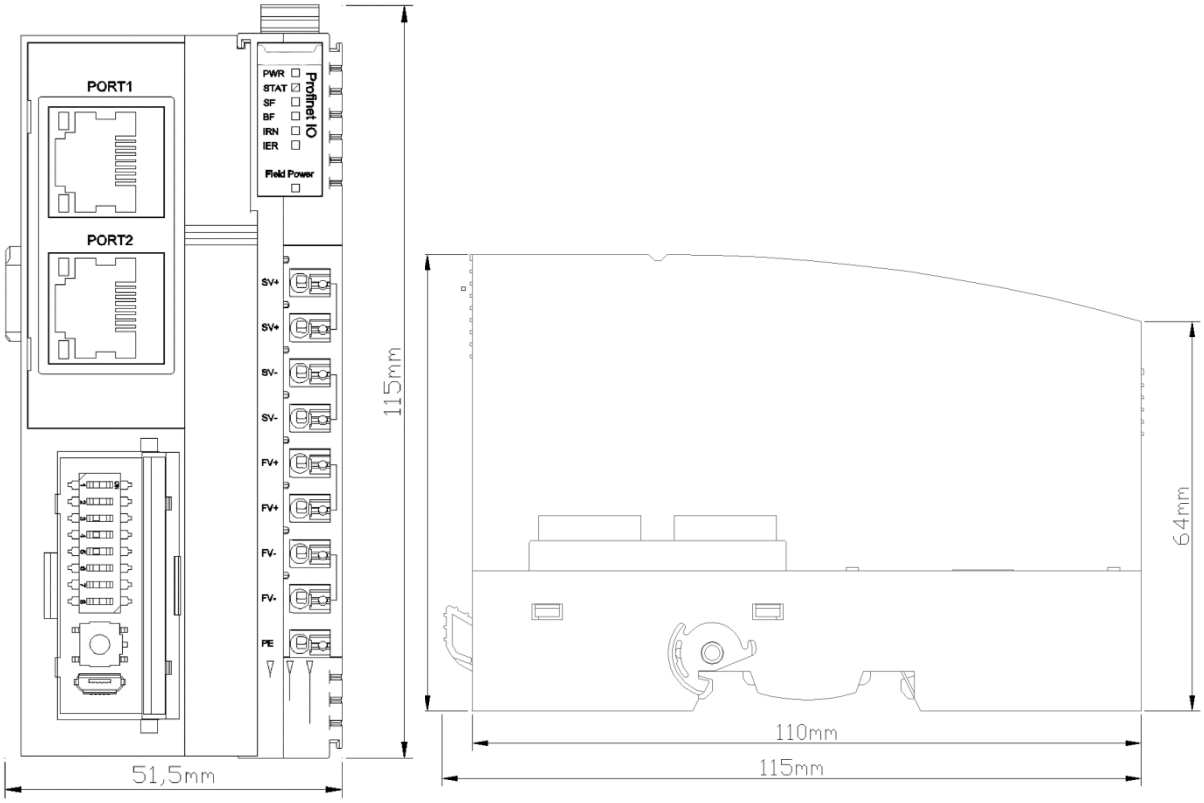

3.1 Network Interface

IN is the input interface of EtherCAT, OUT is the output interface of EtherCAT, and it support switch function with 10Mbps and 100Mbps data rates, MDI/MID-X auto crossover.

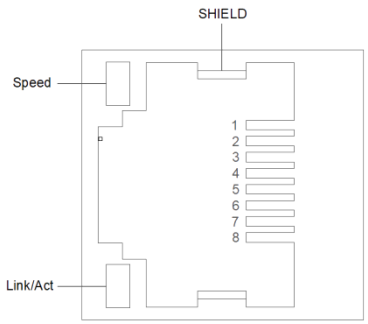

Speed: Network Speed LED Indicator (Green)

ON:100M

OFF:10M

Link/Act: Link State, Active State (Orange)

ON: Link UP

OFF: Link DOWN

Flash: Active

SHIELD: RJ45 Shield Interface

RJ45 Pin definition

Pin	Definition	Description
1	TD+	Transmitter Signal Positive
2	TD-	Transmitter Signal Negative
3	RD+	Receiver Signal Positive
4	--	--
5	--	--
6	RD-	Receiver Signal Positive
7	--	--
8	--	--

3.2 Configuration Interface

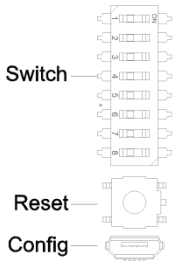

Switch: station alias configuration

When the dial - code switch value is not 0, the dial - code value is station alias, after dialing the code, the site alias will not take effect until the power is turned off and restarted.When the dial - code switch value is 0, using the site alias set by the PLC Master or the site alias in EEPROM memory.

The relationship between the site alias and the dial - code switch value is shown in the following table:

Dial - code switch pin number (ON:1, OFF:0)								Dial - code switch value	Site Alias
1	2	3	4	5	6	7	8		
0	0	0	0	0	0	0	0	0	0
1	0	0	0	0	0	0	0	1	1
0	1	0	0	0	0	0	0	2	2
.	.	.	.	.	.	.	.	.	.
0	1	0	1	0	0	0	0	10	10
.	.	.	.	.	.	.	.	.	.
0	1	1	1	1	1	1	1	254	254
1	1	1	1	1	1	1	1	255	255

Reset: Module reset button. All parameters of the module will be restored to the default value after pressing the button for more than 5 seconds. When the Reset button is pressed, a green LED will light up in the upper left corner of the button.

Config: Configure port, a standard Micro USB interface for configuring device parameters and firmware upgrades.

3.3 LED Indicator

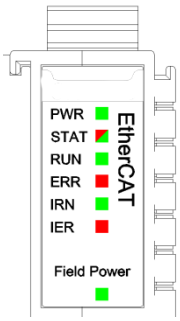

PWR - Power State (RED)	Definition
ON	System Power Normal
OFF	System Power Failure
STAT - Module State LED (RED/GREEN)	Definition
Double Flash (RED)	Module abnormal, has been softly restarted
ON(GREEN)	Operating
Single Flash (GREEN)	Stopping
Flash(2.5Hz) (RED/GREEN)	Upgrading Mode
Flash(10Hz) (RED/GREEN)	Firmware Updating
RUN - Bus running Indicator	Definition
ON	Operating
OFF	Initialization state
Flash(10Hz)	During boot or in the state of BootStrap
Flash(2.5Hz)	Pre-Operational State
Single Flash	Safe Operating State
ERR - Bus Error LED	Definition
OFF	No failure
ON	Application control failure
Flash(10Hz)	Startup Errors
Flash(2.5Hz)	Invalid Configuration
Single Flash	Local error, unsolicited state switch
Double Flash	Watchdog Error
IRN - IO RUN(GREEN)	Definition
ON	IO initialization normal
OFF	IO initialization failure
IER - IO Error (RED)	Definition
OFF	IO communication normal
Double flash	IO communication failure
Field Power - Indicator	Definition
On	On-site power supply normal
Off	On-site power supply abnormal

4 Wiring

Please note when wiring: for the internal construction, two terminals of SV+ have been short-connected, two terminals of SV- have been short-connected, two terminals of FV+ have been short-connected, and two terminals of FV- have been short-connected. For external it only needs to access one system power supply and one field power supply.

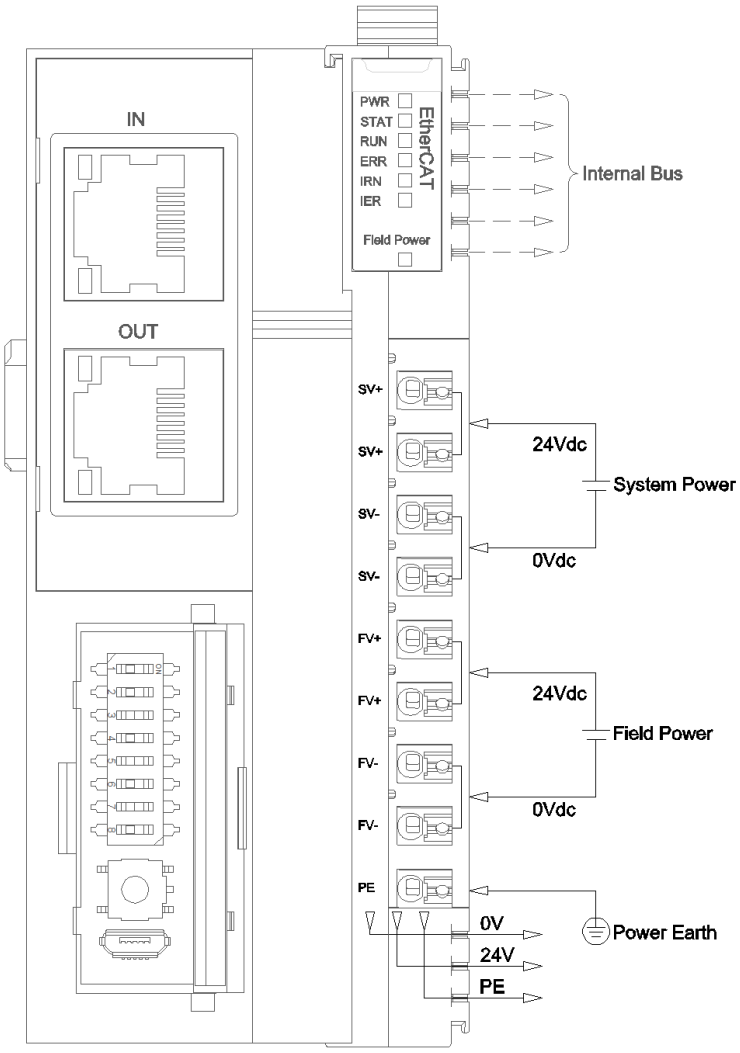

5 Process data definition

5.1 Adapter process data definition

EtherCAT adapter itself has no input/output process data.

5.2 IO module process data mapping

The network adapter reads and writes input and output process data of IO module in real time through the internal bus, and its data mapping model is shown as follow:

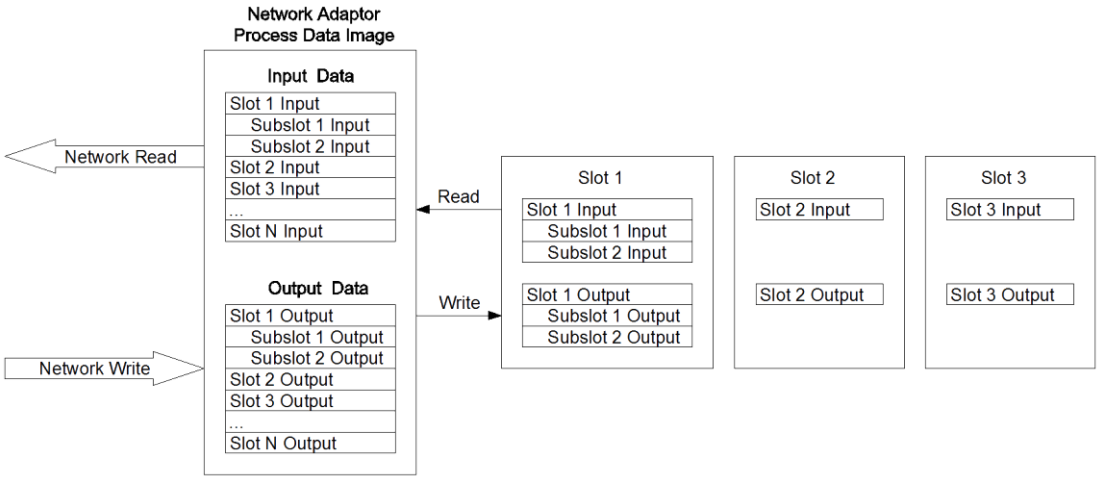

The maximum number of input bytes of the EtherCAT network adapter is 1024 bytes, and the maximum number of output bytes is 1024 bytes.

6 Configuration parameters definition

Configuration parameters								
Bit No	Bit 7	Bit 6	Bit 5	Bit 4	Bit 3	Bit 2	Bit 1	Bit 0
Byte 0	Reserved					Fault Action for Output	Fault Action for Input	Source of Config Data

Data description:

Source of Config Data：Parameter configuration mode (Default: 0)

0：Configured software configuration

1：Field Bus configuration

Fault Action for Input：Input fault handling mode, when IO module is offline, the adapter will process IO module input data according to this mode. (Default: 0)

0：Hold Last Input Value

1：Clearing Input Value

Fault Action for Output：Output fault handling mode，when the fieldbus is offline the adapter will process the IO module output data according to this mode. (Default: 0)

0：Hold Last Output Value

1：Clearing Output Value

A Dimension drawing

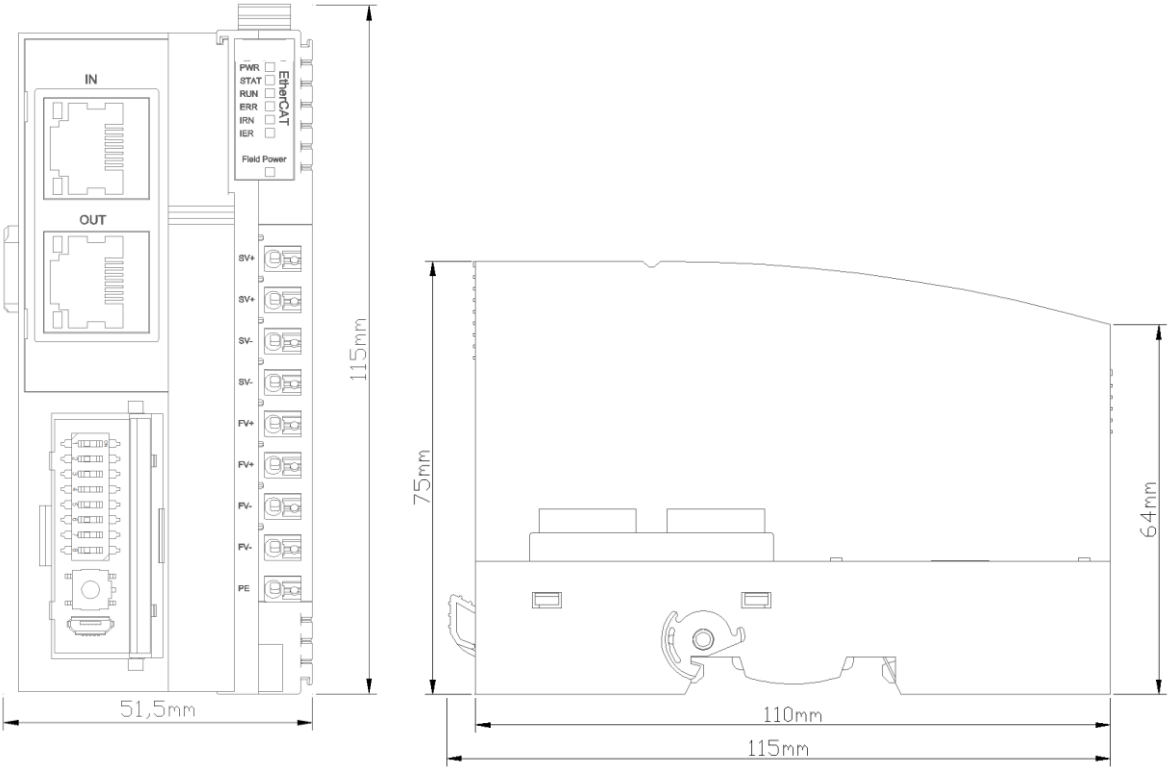

ND-8034 Ethernet/IP Network Adapter

1 The module overview

The ND-8034 Ethernet/IP I/O module supports standard Ethernet/IP protocol access. The adapter supports a Max. input of 504 bytes and a Max. output of 504 bytes. It supports 32 pcs of extended IO modules.

2 Technical Parameters

Hardware Specification	
System Power	Nominal: 24Vdc, Range: 9-36Vdc Protection: Overcurrent Protection, Reverse Protection: YES
Power Consumption	110mA@24Vdc
Internal BUS Supply Current	Max.2A@5VDC
Isolation	System Power to Field Power Isolation
Field Power Supply	Power Supply：22~28V（Nominal 24VDC）
Field Power Supply Current	Max. DC 8A
I/O Modules supported	32 pcs
Wiring	Max.1.0mm² (AWG 17)
Mounting Type	35mm Size DIN-Rail
Size	115*51.5*75mm
Weight	130g
Environment Specification	
Operational Temperature	-40~85℃
Operational Humidity	5%~95% RH(No Condensation)
Ingress Protection Rating	IP20
Ethernet/IP Parameter	
Protocol	Ethernet/IP
Max. input length	504 Bytes per assembly instance
Max. output length	504 Bytes per assembly instance
Max. no. of explicit message connections	10
Max. no. of implicit message connections	5
Max. no. of CIP connections	10
Network Interface	2*RJ45
Speed	10/100Mbps, MDI/MIDX, Full-Duplex
Max.Bus Legenth	100m

3 Hardware Interface

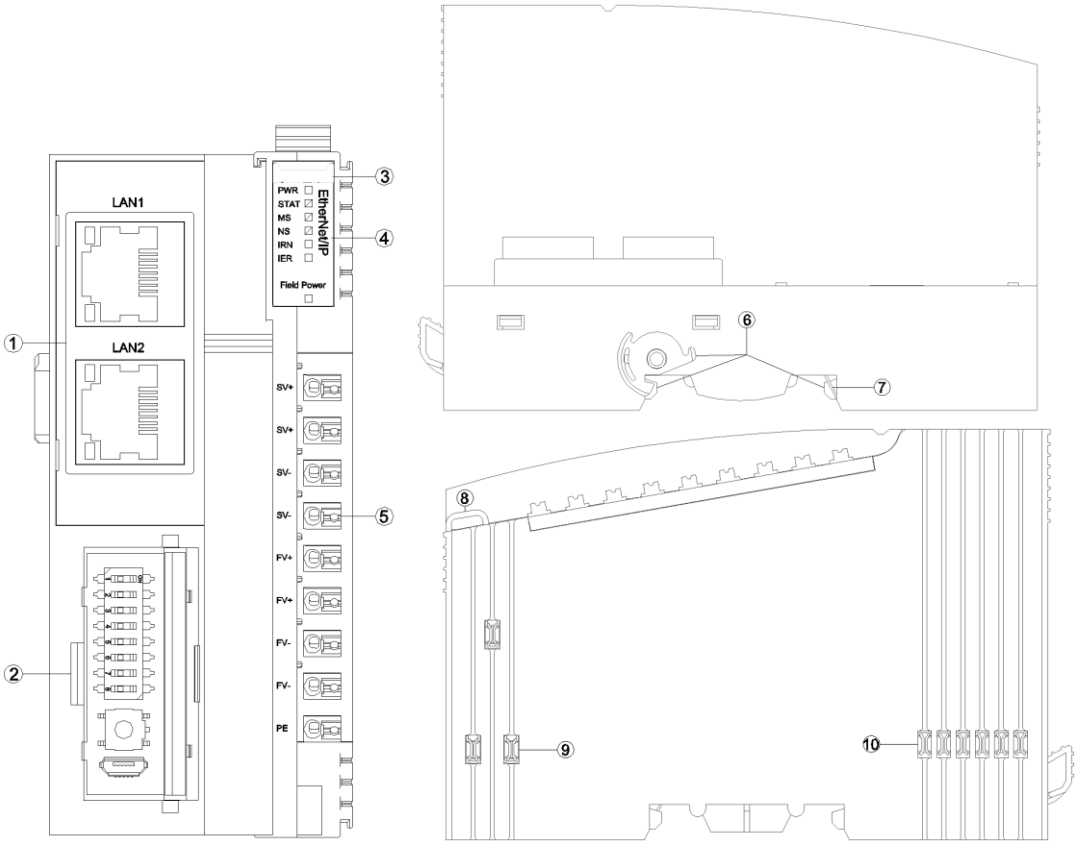

① Network Interface

② Config Interface

③ Module Type

④ LED Indicator

⑤ Wiring Terminal

⑥ Buckle

⑦ Grounding Spring Sheet

⑧ Fixed Wiring Harness

⑨ Field Power

⑩ Internal Bus

3.1 Network Interface

LAN1/LAN2 are the Ethernet/IP Ethernet port which support switch functions, 10Mbps and 100Mbps data rates, MDI/MID-X auto crossover.

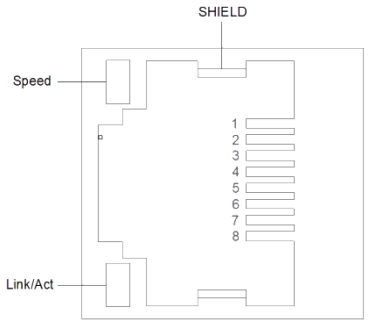

Speed: Network Speed LED Indicator (Green)

ON:100M

OFF:10M

Link/Act: Link State, Active State (Orange)

ON:Link UP

OFF:Link DOWN

Flash:Active

SHIELD: RJ45 Shield Interface

RJ45 Pin definition

Pin	Definition	Description
1	TD+	Transmitter Signal Positive
2	TD-	Transmitter Signal Negative
3	RD+	Receiver Signal Positive
4	--	--
5	--	--
6	RD-	Receiver Signal Positive
7	--	--
8	--	--

3.2 Configuration Interface

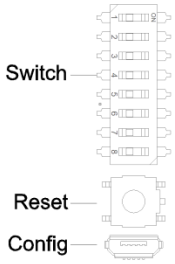

Switch: the DIP switch is used for setting the IP address (the default IP address is 192.168.1.200).

When the dial value is 0, all 4 bytes of the IP address are configured by the software or use the default IP address (192.168.1.200).

When the dial code value is not 0, the last byte of the IP address is determined by the dial code value, and the first three bytes could be configured by the software or use the default address (192.168.1).

The relationship between IP address and dial code value is shown as below:

Dial - code Switch Bit Number (ON: 1, OFF: 0)								Dial - code switch value	IP Address
1	2	3	4	5	6	7	8		
0	0	0	0	0	0	0	0	0	Configured by software (or default）
1	0	0	0	0	0	0	0	1	x.x.x.1
0	1	0	0	0	0	0	0	2	x.x.x.2
1	1	0	0	0	0	0	0	3	x.x.x.3
.	.	.	.	.	.	.	.	.	.
.	.	.	.	.	.	.	.	.	.
0	1	1	1	1	1	1	1	254	x.x.x.254
1	1	1	1	1	1	1	1	255	x.x.x.255
Note: The default IP address after device reset is 192.168.1.200									

Reset: Module reset button, long pressing the button for more than 5 seconds and all parameters of the module will be restored to the default value. When the Reset button is activated, a green indicator will light up in the upper left corner of the button.

Config: Configure port, a standard Micro USB interface for configuring device parameters and firmware upgrades.

3.3 LED indicator

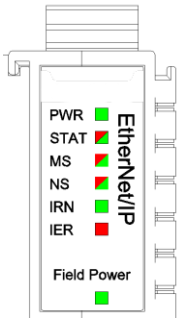

PWR Power State (RED)	Deÿnition
ON	System Power Normal
OFF	System Power Failure
STAT Module State (RED/GREEN)	Deÿnition
Double Flash (RED)	Module Soft Restarted by Hard-Fault
ON(GREEN)	Running
Single Flash (GREEN)	Stopping
Flash(2.5Hz) (RED/GREEN)	Boot Mode
Flash(10Hz) (RED/GREEN)	Firmware Updating
MS module state indicator	Deÿnition
ON(GREEN)	Module running state correct
Flash(1Hz) (GREEN)	Module not conÿgured
Flash(GREEN/RED/GREEN)	Module power on self-test state
Flash(1Hz) (RED)	The module detects a recoverable failure state
Red(GREEN)	The module detects an unrecoverable failure status
OFF	Module power o°
NS network state indicator	Deÿnition
ON(GREEN)	The connection has been established.IP address conÿguration completed, at least one CIP connection established, the master connection does not time out.
Flash(1Hz) (GREEN)	The connection not established.IP address conÿguration completed, CIP connection not established, the master connection does not time out.
Flash(GREEN/RED/OFF)	Module power on self-test state.
Flash(1Hz) (RED)	The connection times out, IP address conÿguration completed, the master connection times out.
ON(RED)	Duplicate IP, the IP addressis is already in use.
OFF	Not powered, no IP address.
IRN - IO RUN(GREEN)	Definition
ON	IO initialization normal
OFF	IO initialization failure
IER - IO Error (RED)	Definition
OFF	IO communication normal
Double flash	IO communication failure

Field Power - Indicator	Definition
ON	On-site power supply normal
OFF	On-site power supply abnormal

4 Wiring

Please note when wiring: for the internal construction, two terminals of SV+ have been short-connected, two terminals of SV- have been short-connected, two terminals of FV+ have been short-connected, and two terminals of FV- have been short-connected. For external it only needs to access one system power supply and one field power supply.

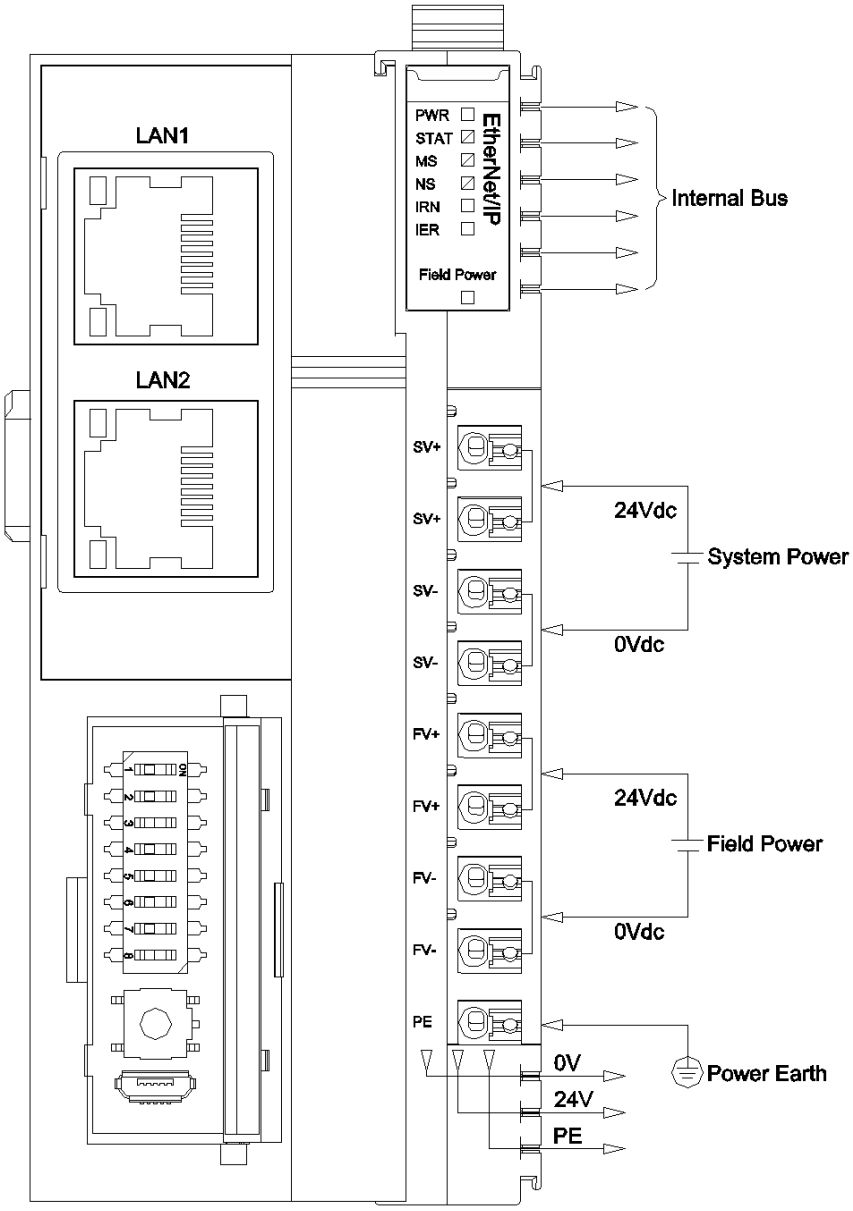

5 Process data definition

5.1 Adapter process data definition

Ethernet/IP adapter itself has no input/output process data.

5.2 IO module process data mapping

The network adapter reads and writes input and output process data of IO module in real time through the internal bus, and its data mapping model is shown as follow:

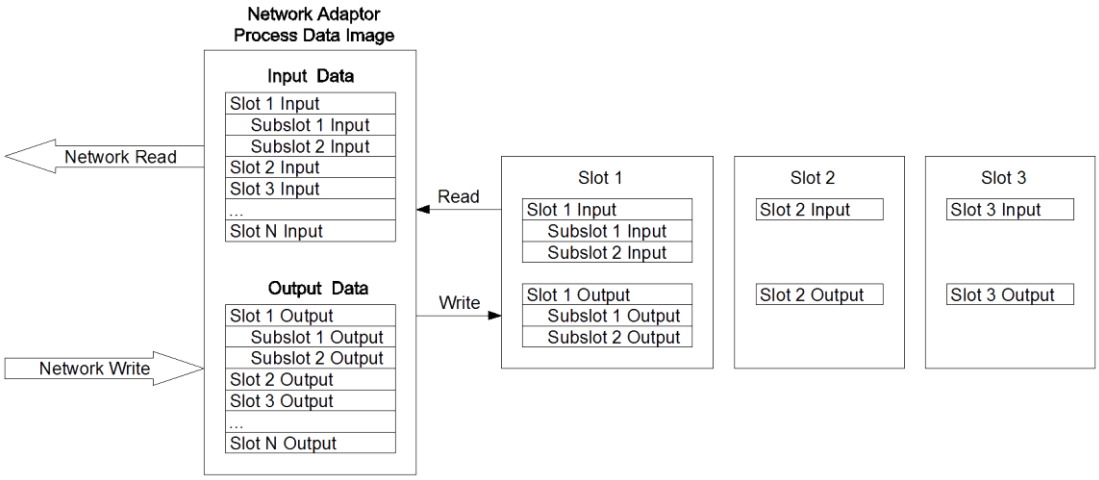

The maximum number of input bytes of the Ethernet/IP network adapter is 504 bytes, and the maximum number of output bytes is 504 bytes.

6 Configuration parameters definition

Configuration parameters								
Bit No	Bit 7	Bit 6	Bit 5	Bit 4	Bit 3	Bit 2	Bit 1	Bit 0
Byte 0	Reserved			O-->T Transfer Format	T-->O Transfer Format	Fault Action for Output	Fault Action for Input	Source of Config Data
Byte 1	MAC Address [0]							
Byte 2	MAC Address [1]							
Byte 3	MAC Address [2]							
Byte 4	MAC Address [3]							
Byte 5	MAC Address [4]							
Byte 6	MAC Address [5]							
Byte 7	IP Address [0]							
Byte 8	IP Address [1]							
Byte 9	IP Address [2]							
Byte 10	IP Address [3]							
Byte 11	Net Mask [0]							
Byte 12	Net Mask [1]							
Byte 13	Net Mask [2]							
Byte 14	Net Mask [3]							
Byte 15	Net Gateway [0]							
Byte 16	Net Gateway [1]							
Byte 17	Net Gateway [2]							
Byte 18	Net Gateway [3]							
Byte 19	T-->O Size (Bytes)							
Byte 20								
Byte 21	O-->T Size (Bytes)							
Byte 22								

Data description:

Source of Config Data：Parameter configuration mode (Default: 0)

0：Configured software configuration

1：Field Bus configuration

Fault Action for Input：Input fault handling mode, when IO module is offline, the adapter will process IO module input data according to this mode. (Default: 0)

0：Hold Last Input Value

1：Clearing Input Value

Fault Action for Output：Output fault handling mode，when the fieldbus is offline the adapter will process the IO module output data according to this mode. (Default: 0)

0：Hold Last Output Value

1：Clearing Output Value

T-->O Transfer Format：T-->O Input conversion format, read only.

O-->T Transfer Format：O-->T Output conversion format, read only.

MAC Address：MAC address, read only.

IP Address：IP Addess

Subnet Mask

Gateway Address

T-->O Size (Bytes)：O-->T length (Bytes) , read only.

O-->T Size (Bytes)：O-->T length (Bytes) , read only.

A Dimension drawing

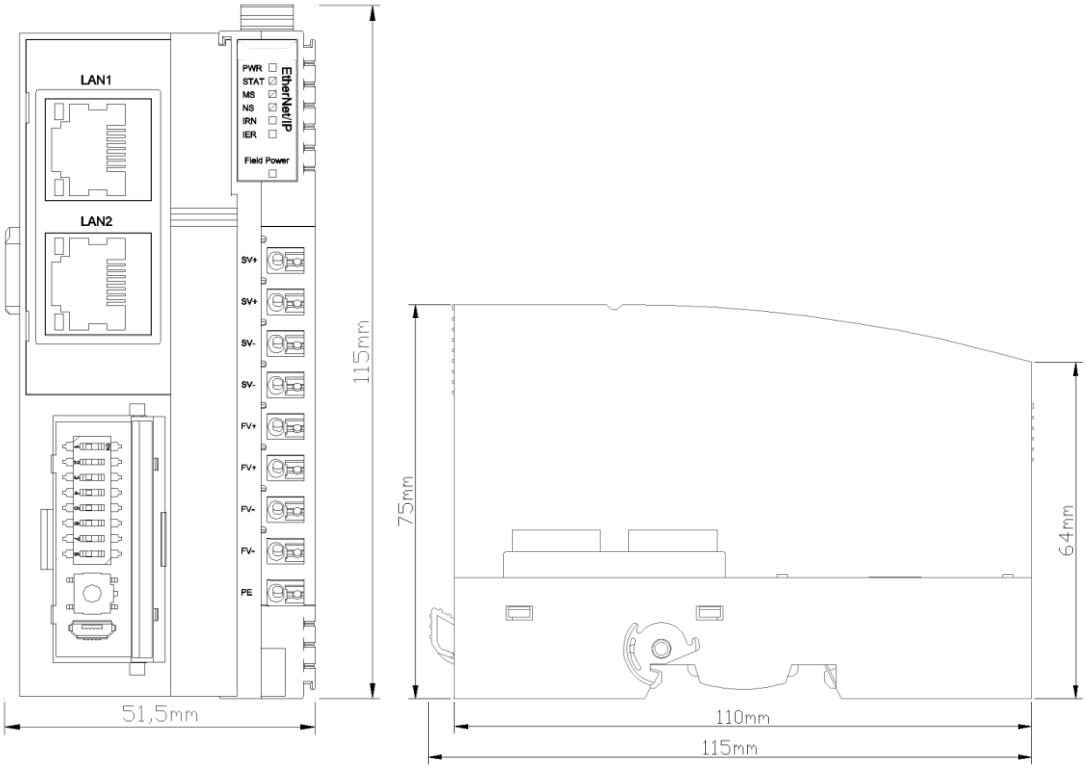

3 Extended IO module

NT-1218 8 channels digital input/24VDC/PNP

1 Module features

◆the module supports 8 channels digital input, supports sink input， and the input voltage is 24VDC and the input high level is valid. It could support PNP sensor.

◆the module could collect digital output signal of field equipment (dry contact or active output).

◆the module could be accessed to 2-wire or 3-wire digital sensor.

◆the internal bus and field input of the module use opto-isolator.

◆the module supports the input signal holding function, and the holding time can be set.

◆the module carries 8 digigtal input channels with LED indicator on each channel.

◆supports counting function after adding counting sub-module.

◆each input channel of the module supports a 32-bit counter with the counting frequency <200Hz.

◆the module could be set the digital signal input filtering time and the byte transmission order of the counter.

◆each channel of the module could be set the counting mode and counting direction independently.

3 Extended IO module

NT-1218 8 channels digital input/24VDC/PNP

1 Module features

◆the module supports 8 channels digital input, supports sink input， and the input voltage is 24VDC and the input high level is valid. It could support PNP sensor.

◆the module could collect digital output signal of field equipment (dry contact or active output).

◆the module could be accessed to 2-wire or 3-wire digital sensor.

◆the internal bus and field input of the module use opto-isolator.

◆the module supports the input signal holding function, and the holding time can be set.

◆the module carries 8 digigtal input channels with LED indicator on each channel.

◆supports counting function after adding counting sub-module.

◆each input channel of the module supports a 32-bit counter with the counting frequency <200Hz.

◆the module could be set the digital signal input filtering time and the byte transmission order of the counter.

◆each channel of the module could be set the counting mode and counting direction independently.

3 Hardware interfaces

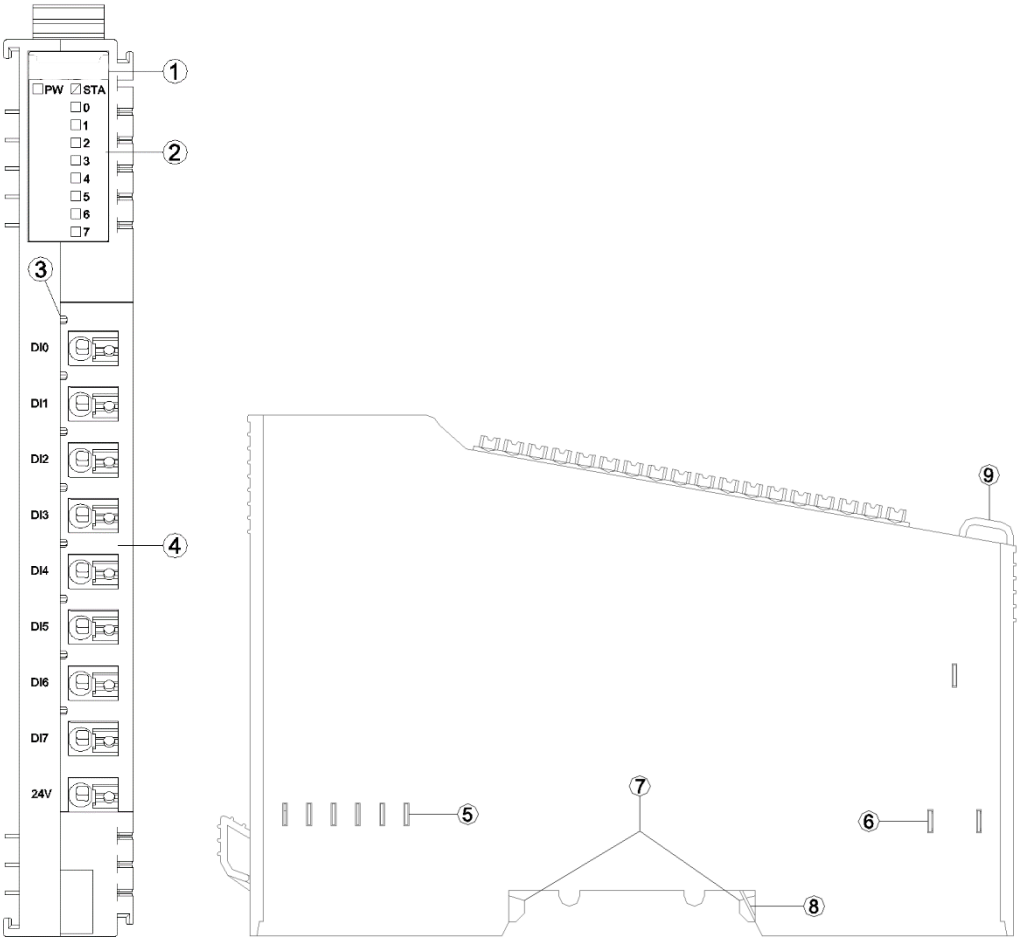

① Module Type

② State indicator

③ Channel indicator

④ Wiring Terminal and identification

⑤ Internal Bus

⑥ Field Power

⑦ Buckle

⑧ Grounding Spring Sheet

⑨ Fixed Wiring Harness

3.1 LED indicator definition

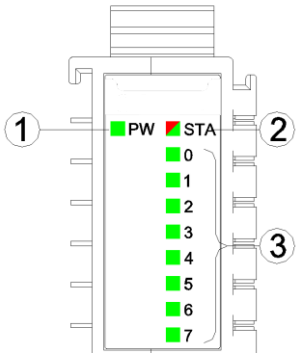

① Power LED indicator (green)

② Module State LED indicator (red/green)

③ Input channel LED indicator (green)

PW Power State (GREEN)	Definition
ON	Internal bus Power Normal
OFF	Internal bus Power Failure
STA Module State (RED/GREEN)	Definition
Green slow flash (2.5Hz)	Module internal bus is not started
Red slow flash (2.5Hz)	Module internal bus offline
ON (GREEN)	Operation normal
Flash(2.5Hz) (RED/GREEN)	Upgrading mode
Flash(10Hz) (RED/GREEN)	Firmware Update
Double Flash (RED)	Module Exception has been soft-restarted
0-7 channel LED indicator	Definition
ON	Input signal valid
OFF	Input signal invalid

3.2 Field channel LED indicator (Green)

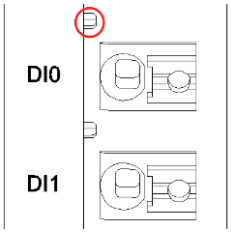

When input signal of input channel is valid, the corresponding field channel LED indicator is on.

3.3 Terminal definition

Terminal Number	Symbol	Description
1	DI0	Signal input
2	DI1	
3	DI2	
4	DI3	
5	DI4	
6	DI5	
7	DI6	
8	DI7	
9	24V	Power output

It is recommended to use cables with cores smaller than 1mm².

The cold-pressed terminal parameters are as follows:

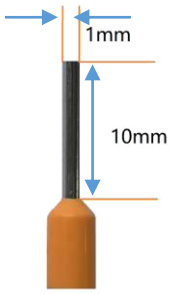

4 Wiring

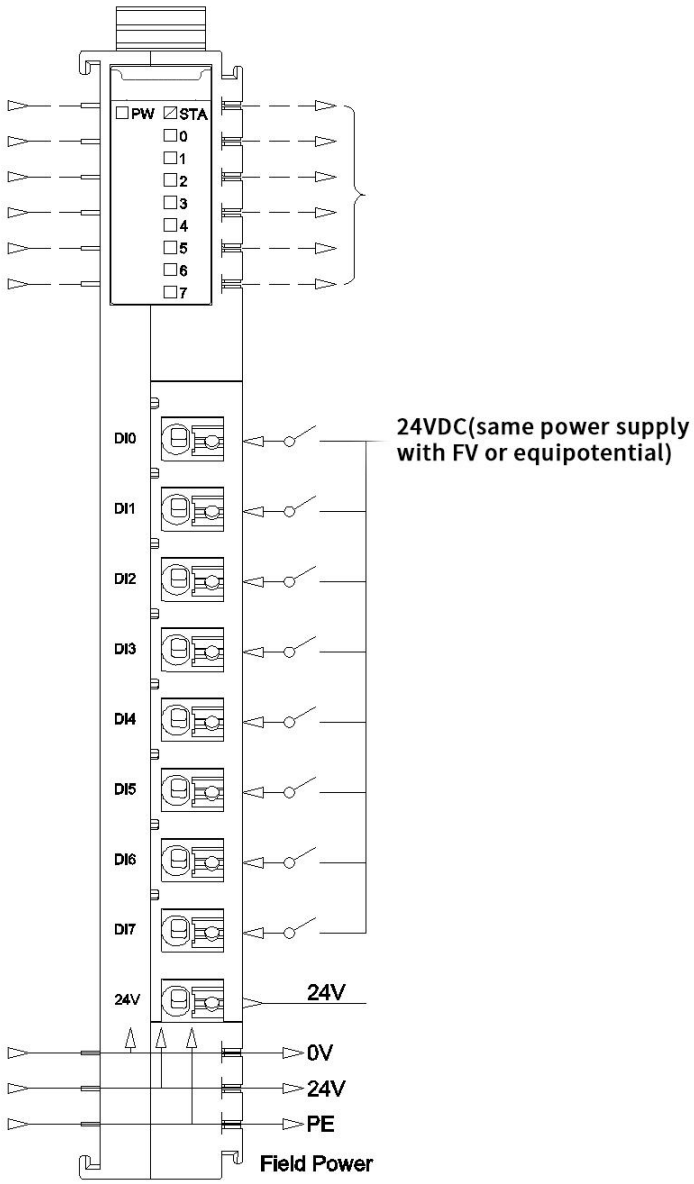

5 Process data definition

<8DI Input Status> Submodule process data definition

Input data								
Bit No	Bit 7	Bit 6	Bit 5	Bit 4	Bit 3	Bit 2	Bit 1	Bit 0
Byte 0	DI Ch#7	DI Ch#6	DI Ch#5	DI Ch#4	DI Ch#3	DI Ch#2	DI Ch#1	DI Ch#0

Data description:

DI Ch#(0-7): When the corresponding channel input signal is valid, the bit is 1, and when the input is invalid, it is 0.

0：Input signal invalid

1：Input signal valid

<8DI Counter Submodule> Submodule process data definition:

Input data								
Bit No	Bit 7	Bit 6	Bit 5	Bit 4	Bit 3	Bit 2	Bit 1	Bit 0
Byte 0	Counter Value Ch#0							
Byte 1								
Byte 2								
Byte 3								
Byte 4	Counter Value Ch#1							
Byte 5								
Byte 6								
Byte 7								
Byte 8	Counter Value Ch#2							
Byte 9								
Byte 10								
Byte 11								
Byte 12	Counter Value Ch#3							
Byte 13								
Byte 14								
Byte 15								
Byte 16	Counter Value Ch#4							
Byte 17								
Byte 18								
Byte 19								
Byte 20	Counter Value Ch#5							
Byte 21								
Byte 22								
Byte 23								
Byte 24	Counter Value Ch#6							
Byte 25								
Byte 26								
Byte 27								
Byte 28	Counter Value Ch#7							
Byte 29								
Byte 30								
Byte 31								
Output data								
Bit No	Bit 7	Bit 6	Bit 5	Bit 4	Bit 3	Bit 2	Bit 1	Bit 0
Byte 0	Counter Reset Ch#7	Counter Reset Ch#6	Counter Reset Ch#5	Counter Reset Ch#4	Counter Reset Ch#3	Counter Reset Ch#2	Counter Reset Ch#1	Counter Reset Ch#0

Data description:

Counter Value Ch#(0-7): Count value, 32-bit unsigned integer, automatically zeroing after overflow.

Counter Reset Ch#(0-7): When the data bit changes from 0 to 1 (rising edge), the input counter of the corresponding channel is cleared.

Note: the maximum counting frequency of the input channel is 200Hz. When the input signal exceeds this frequency, the counting result may be inconsistent with the actual value.

6 Configuration parameter definitions

<8DI Input Status> Submodule configuration parameter definition

Configuration parameters								
Bit No	Bit 7	Bit 6	Bit 5	Bit 4	Bit 3	Bit 2	Bit 1	Bit 0
Byte 0	Input Filtering Time(ms)							
Byte 1								
Byte 2	Reserved					Input Holding Time(ms)		

Data description:

Input Filtering Time(ms): Input filter time of Channel (ms) (Default: 10)

Input Holding Time(ms): Signal input holding time of Channel (ms) (Default:0)

0：Disable

1：200ms

2：500ms

3：1000ms

4：1500ms

5：2000ms

6：3000ms

7：5000ms

<8DI Counter Submodule> Submodule configuration parameter definition

Configuration parameters								
Bit No	Bit 7	Bit 6	Bit 5	Bit 4	Bit 3	Bit 2	Bit 1	Bit 0
Byte 0	Reserved				Storage Enable	Storage Function	32Bit Data Format	
Byte 1	Count Mode Ch#3		Count Mode Ch#2		Count Mode Ch#1		Count Mode Ch#0	
Byte 2	Count Mode Ch#7		Count Mode Ch#6		Count Mode Ch#5		Count Mode Ch#4	
Byte 3	Count Direction Ch#7	Count Direction Ch#6	Count Direction Ch#5	Count Direction Ch#4	Count Direction Ch#3	Count Direction Ch#2	Count Direction Ch#1	Count Direction Ch#0

Data description:

32Bit Data Format: Byte transfer order of Channel count value (Default: 0)

0：AB-CD

1：BA-DC

2：CD-AB

3：DC-BA

Storage Function: Storage Function is supported or not, read only attribute, and this value is the actual value of the module when uploading device parameters.

0：storage is not supported

1：storage is supported

Storage Enable：Storage enable，when the Storage Function enables, the IO module will save the count value in real time to non-volatile memory, and load the last saved count value on the next power on. (Default: 1)

0：Disabled

1：Enable

Count Mode Ch# (0-7)：Count mode of the input channel. (Default: 0)

0: rising edge count

1: falling edge count

2: double edge count

Count Direction Ch# (0-7): The counting direction of the input channel. (Default: 0

0: count up

1: count down

A Dimension drawing

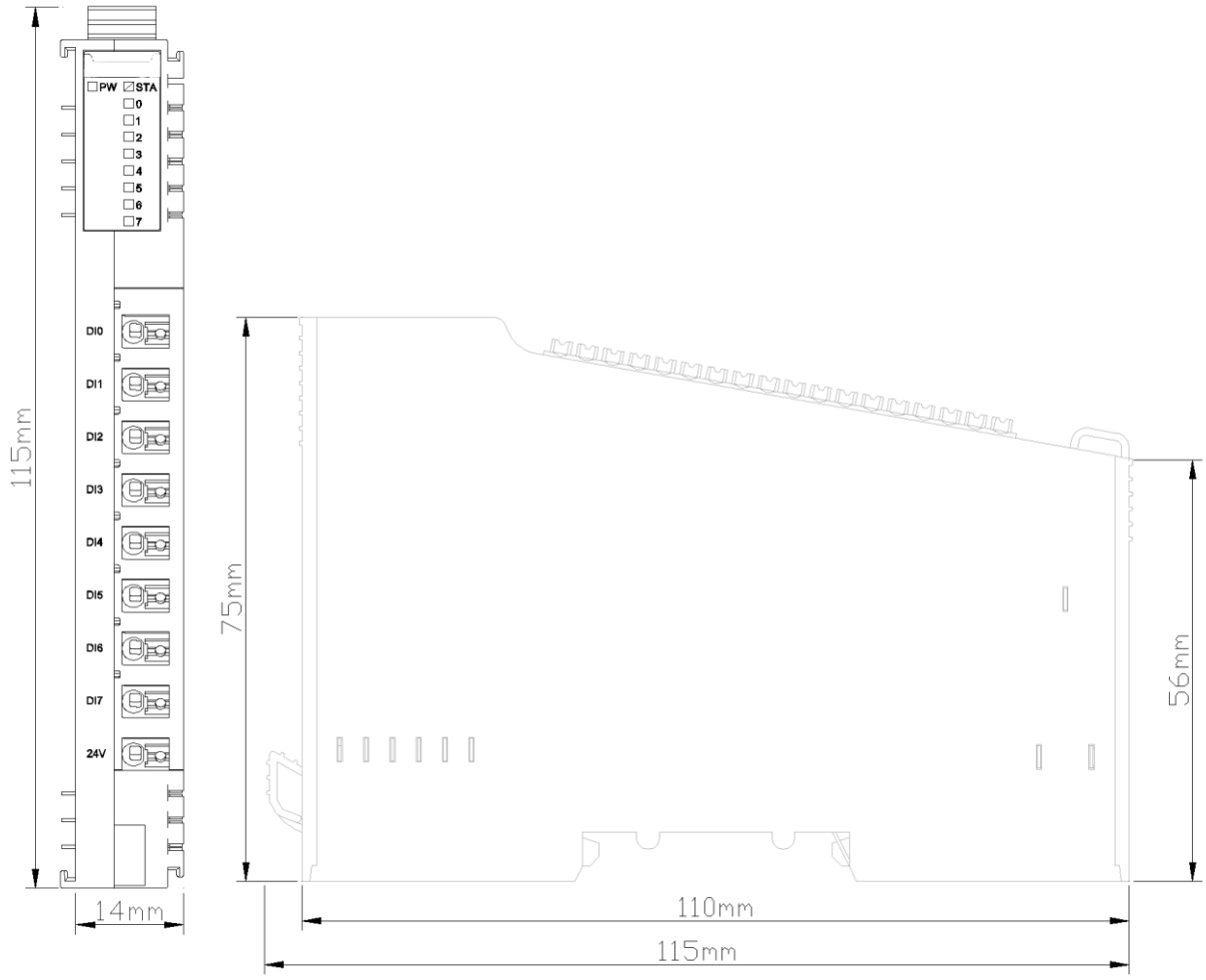

NT-121F 16 channels digital input/24VDC/ PNP

1 Module features

◆ the module supports 16 channels digital input, supports sink input， and the input voltage is 24VDC and the input high level is valid. It could support PNP sensor.

◆ the module could collect digital output signal of field equipment (dry contact or active output).

◆ the module could be accessed to 2-wire or 3-wire digital sensor.

◆ the internal bus and field input of the module use opto-isolator.

◆ the module supports the input signal holding function, and the holding time can be set.

◆the module carries 16 digigtal input channels with LED indicator on each channel.

◆ supports counting function after adding counting sub-module.

◆ each input channel of the module supports a 32-bit counter with the counting frequency <200Hz.

◆ the module could be set the digital signal input filtering time and the byte transmission order of the counter.

◆ each channel of the module could be set the counting mode and counting direction independently.

2 Technical parameters

General parameters	
Power Consumption	Max.60mA@5.0Vdc
Isolation	I/O to internal bus: opto-couple isolation (3KVrms)
Field Power	Nominal:24Vdc, Range:22-28Vdc
Wiring	Max.1.0mm² (AWG 17)
Mounting Type	35mm DIN-Rail
Size	115*14*75mm
Weight	65g
Environment Specification	
Operational Temperature	-40~85℃
Operational Humidity	5%-95% (No Condensation)
Ingress Protection Rating	IP20
Input parameters	
Channel Number	16 channel sink input
LED Indicator	16 channel input LED indicator
Turn-on voltage	Min.10Vdc to Max.28Vdc
Turn-off Voltage	Max.5Vdc
Turn-on current	Max.5mA/channel@28V
Input impedance	>7.5kΩ
Input delay	OFF to ON: Max.3ms ON to OFF: Max.2ms
Filter time	Default 10ms
Sample frequency	500Hz
Counter frequency	<200Hz

3 Hardware interfaces

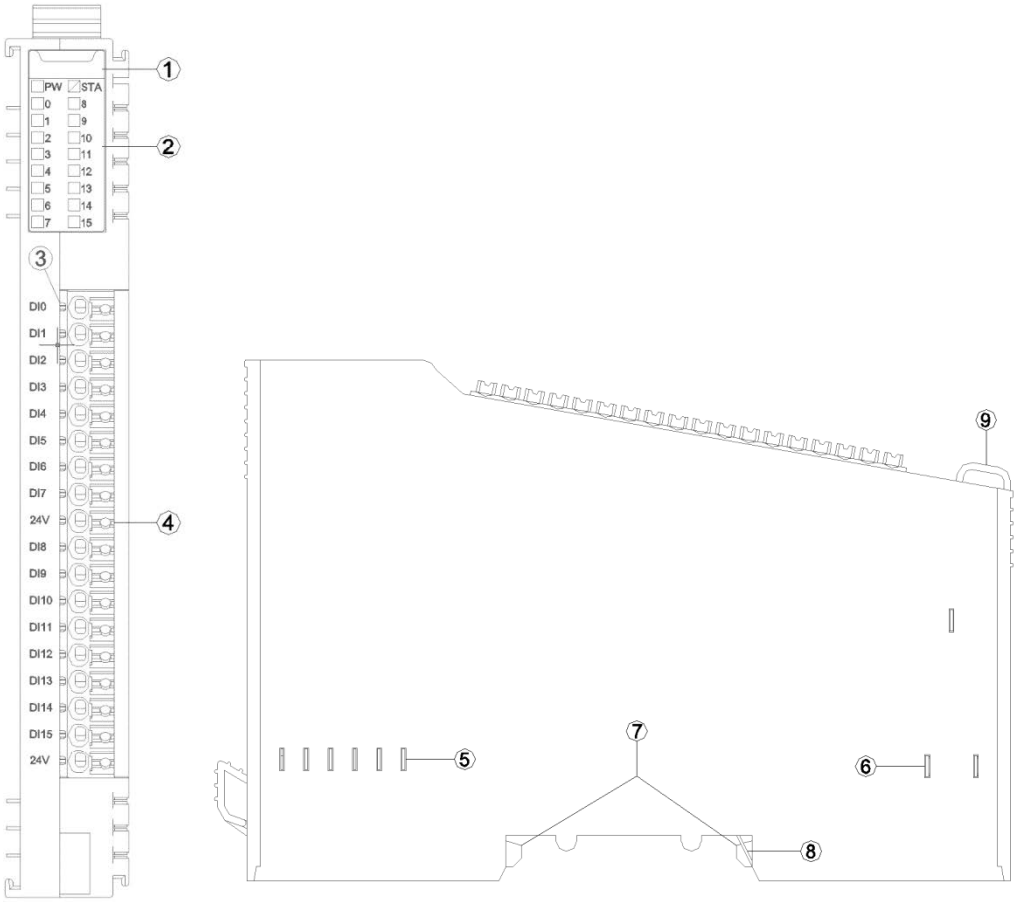

① Module Type

② State indicator

③ Channel indicator

④ Wiring Terminal and identification

⑤ Internal Bus

⑥ Field Power

⑦ Buckle

⑧ Grounding Spring Sheet

⑨ Fixed Wiring Harness

3.1 LED indicator definition

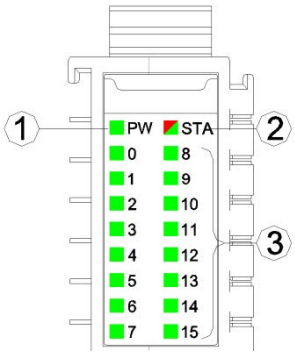

① Power LED indicator (green)

② Module State LED indicator (red/green)

③ Input channel LED indicator (green)

PW Power State (GREEN)	Definition
ON	Internal bus Power Normal
OFF	Internal bus Power Failure
STA Module State (RED/GREEN)	Definition
Green slow flash (2.5Hz)	Module internal bus is not started
Red slow flash (2.5Hz)	Module internal bus offline
ON (GREEN)	Operation normal
Flash(2.5Hz) (RED/GREEN)	Upgrading mode
Flash(10Hz) (RED/GREEN)	Firmware Update
Double Flash (RED)	Module Exception has been soft-restarted
0-15 channel indicator light	Definition
ON	Input signal valid
OFF	Input signal invalid

3.2 Field channel LED indicator (Green)

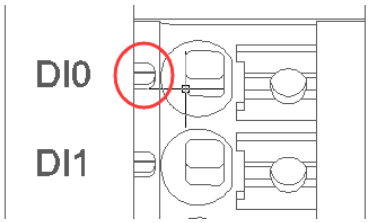

When input signal of input channel is valid, the corresponding field channel LED indicator is on.

3.3 Terminal definition

Terminal Number	Symbol	Description
1	DI0	Signal input
2	DI1	
3	DI2	
4	DI3	
5	DI4	
6	DI5	
7	DI6	
8	DI7	
9	24V	Power output
10	DI8	Signal input
11	DI9	
12	DI10	
13	DI11	
14	DI12	
15	DI13	
16	DI14	
17	DI15	
18	24V	Power output

It is recommended to use cables with cores smaller than 1mm².

The cold-pressed terminal parameters are as follows:

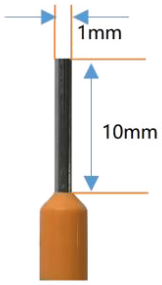

4 Wiring

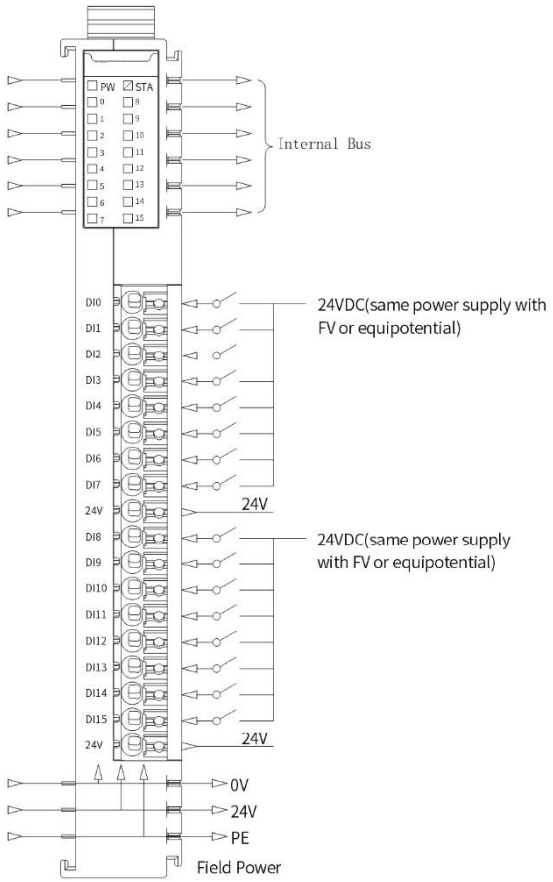

5 Process data definition

<16DI Input State> Submodule process data definition

Input data								
Bit No	Bit 7	Bit 6	Bit 5	Bit 4	Bit 3	Bit 2	Bit 1	Bit 0
Byte 0	DI Ch#7	DI Ch#6	DI Ch#5	DI Ch#4	DI Ch#3	DI Ch#2	DI Ch#1	DI Ch#0
Byte 1	DI Ch#15	DI Ch#14	DI Ch#13	DI Ch#12	DI Ch#11	DI Ch#10	DI Ch#9	DI Ch#8

Data description:

DI Ch#(0-15): When the corresponding channel input signal is valid, the bit is 1, and

when the input is invalid, it is 0.

0：Input signal invalid

1：Input signal valid

<16DI Counter Submodule> Submodule process data definition:

Input data								
Bit No	Bit 7	Bit 6	Bit 5	Bit 4	Bit 3	Bit 2	Bit 1	Bit 0
Byte 0	Counter Value Ch#0							
Byte 1								
Byte 2								
Byte 3								
Byte 4	Counter Value Ch#1							
Byte 5								
Byte 6								
Byte 7								
Byte 8	Counter Value Ch#2							
Byte 9								
Byte 10								
Byte 11								
Byte 12	Counter Value Ch#3							
Byte 13								
Byte 14								
Byte 15								
Byte 16	Counter Value Ch#4							
Byte 17								
Byte 18								
Byte 19								
Byte 20	Counter Value Ch#5							
Byte 21								
Byte 22								
Byte 23								
Byte 24	Counter Value Ch#6							
Byte 25								
Byte 26								
Byte 27								
Byte 28	Counter Value Ch#7							
Byte 29								
Byte 30								
Byte 31								
Byte 32	Counter Value Ch#8							
Byte 33								
Byte 34								
Byte 35								
Byte 36	Counter Value Ch#9							
Byte 37								

Byte 38	
Byte 39	
Byte 40	Counter Value Ch#10
Byte 41	
Byte 42	
Byte 43	
Byte 44	Counter Value Ch#11
Byte 45	
Byte 46	
Byte 47	
Byte 48	Counter Value Ch#12
Byte 49	
Byte 50	
Byte 51	
Byte 52	Counter Value Ch#13
Byte 53	
Byte 54	
Byte 55	
Byte 56	Counter Value Ch#14
Byte 57	
Byte 58	
Byte 59	
Byte 60	Counter Value Ch#15
Byte 61	
Byte 62	
Byte 63	

Output data								
Bit No	Bit 7	Bit 6	Bit 5	Bit 4	Bit 3	Bit 2	Bit 1	Bit 0
Byte 0	Counter Reset Ch#7	Counter Reset Ch#6	Counter Reset Ch#5	Counter Reset Ch#4	Counter Reset Ch#3	Counter Reset Ch#2	Counter Reset Ch#1	Counter Reset Ch#0
Byte 1	Counter Reset Ch#15	Counter Reset Ch#14	Counter Reset Ch#13	Counter Reset Ch#12	Counter Reset Ch#11	Counter Reset Ch#10	Counter Reset Ch#9	Counter Reset Ch#8

Data description:

Counter Value Ch#(0-15): Count value, 32-bit unsigned integer, automatically zeroing after overflow.

Counter Reset Ch#(0-15): When the data bit changes from 0 to 1 (rising edge), the input counter of the corresponding channel is cleared.

Note: the maximum counting frequency of the input channel is 200Hz. When the input signal exceeds this frequency, the counting result may be inconsistent with the actual value.

6 Configuration parameter definitions

<16DI Input State> Submodule configuration parameter definition

Configuration parameters								
Bit No	Bit 7	Bit 6	Bit 5	Bit 4	Bit 3	Bit 2	Bit 1	Bit 0
Byte 0	Input Filtering Time(ms)							
Byte 1								
Byte 2	Reserved					Input Holding Time(ms)		

Data description:

Input Filtering Time(ms): Input filter time of Channel (ms) (Default: 10)

Input Holding Time(ms): Signal input holding time of Channel (ms) (Default:0)

0：Disable

1：200ms

2：500ms

3：1000ms

4：1500ms

5：2000ms

6：3000ms

7：5000ms

<16DI Counter Submodule> Submodule configuration parameter definition

Configuration parameters								
Bit No	Bit 7	Bit 6	Bit 5	Bit 4	Bit 3	Bit 2	Bit 1	Bit 0
Byte 0	Reserved				Storage Enable	Storage Function	32Bit Data Format	
Byte 1	Count Mode Ch#3		Count Mode Ch#2		Count Mode Ch#1		Count Mode Ch#0	
Byte 2	Count Mode Ch#7		Count Mode Ch#6		Count Mode Ch#5		Count Mode Ch#4	
Byte 3	Count Mode Ch#11		Count Mode Ch#10		Count Mode Ch#9		Count Mode Ch#8	
Byte 4	Count Mode Ch#15		Count Mode Ch#14		Count Mode Ch#13		Count Mode Ch#12	
Byte 5	Count Direction Ch#7	Count Direction Ch#6	Count Direction Ch#5	Count Direction Ch#4	Count Direction Ch#3	Count Direction Ch#2	Count Direction Ch#1	Count Direction Ch#0

Byte 6	Count Direction Ch#15	Count Direction Ch#14	Count Direction Ch#13	Count Direction Ch#12	Count Direction Ch#11	Count Direction Ch#10	Count Direction Ch#9	Count Direction Ch#8

Data description:

32Bit Data Format: Byte transfer order of Channel count value (Default: 0)

0：AB-CD

1：BA-DC

2：CD-AB

3：DC-BA

Storage Function: Storage Function is supported or not, read only attribute, and this value is the actual value of the module when uploading device parameters.

0：storage is not supported

1：storage is supported

Storage Enable：Storage enable，when the Storage Function enables, the IO module will save the count value in real time to non-volatile memory, and load the last saved count value on the next power on. (Default: 1)

0：Disabled

1：Enable

Count Mode Ch# (0-15)：Count mode of the input channel. (Default: 0)

0: rising edge count

1: falling edge count

2: double edge count

Count Direction Ch# (0-15): The counting direction of the input channel. (Default: 0)

0: count up

1: count down

A Dimension drawing

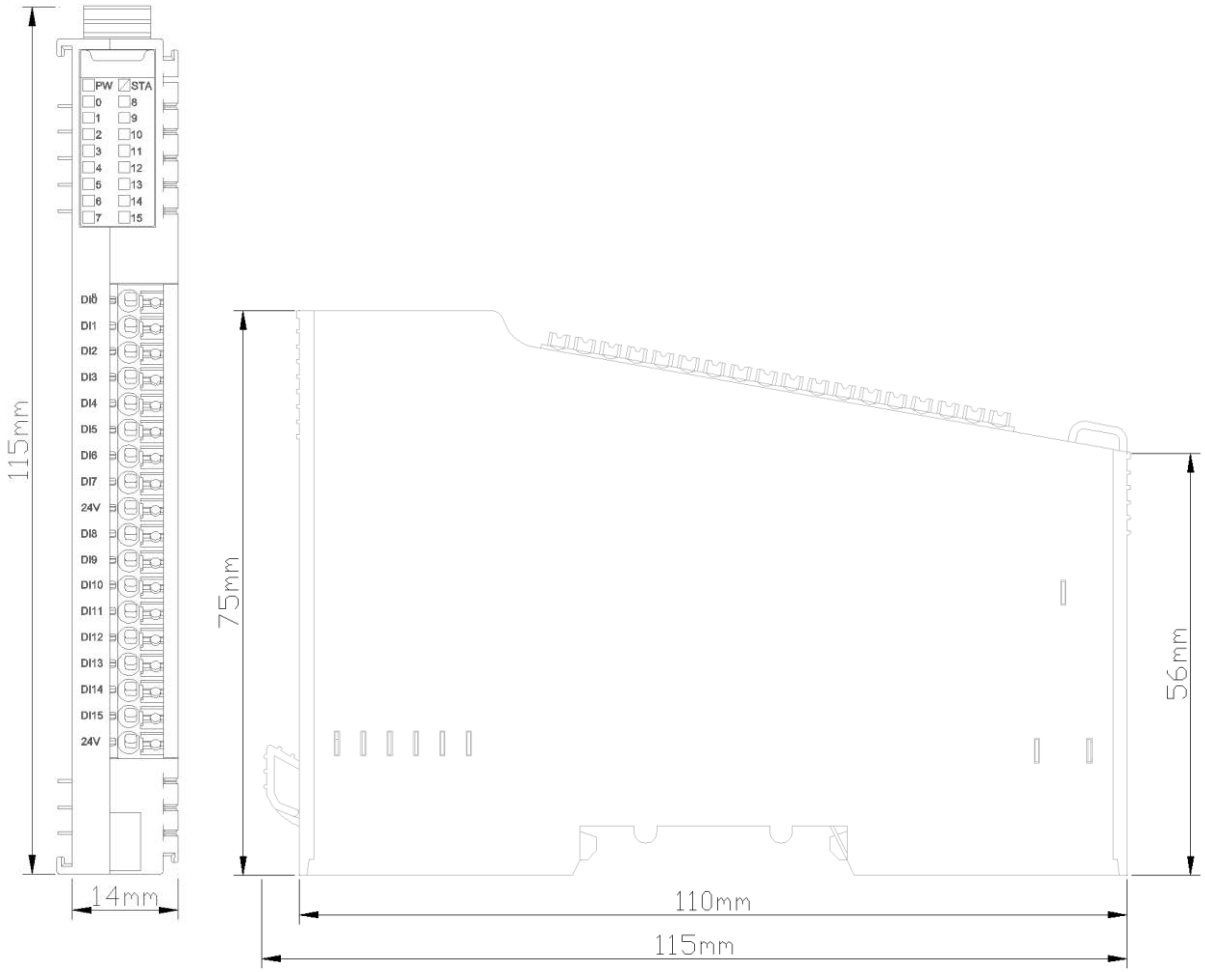

NT-1228 8 channels digital input/24VDC/NPN

1 Module features

◆ the module supports 8 channels digital input, and the input low level is valid. It could support NPN sensor.

◆ the module could collect digital output signal of field equipment (dry contact or active output).

◆ the module could be accessed to 2-wire or 3-wire digital sensor.

◆ the internal bus and field input of the module use opto-isolator.

◆ the module supports the input signal holding function, and the holding time can be set.

◆ the module carries 8 digigtal input channels with LED indicator on each channel.

◆ supports counting function after adding counting sub-module.

◆ each input channel of the module supports a 32-bit counter with the counting frequency <200Hz.

◆ the module could be set the digital signal input filtering time and the byte transmission order of the counter.

◆ each channel of the module could be set the counting mode and counting direction independently.

2 Technical parameters

General parameters	
Power Consumption	Max.85mA@5.0Vdc
Isolation	I/O to internal bus: opto-couple isolation (3KVrms)
Field Power	Nominal:24Vdc, Range:22-28Vdc
Wiring	Max.1.0mm² (AWG 17)
Mounting Type	35mm DIN-Rail
Size	115*14*75mm
Weight	65g
Environment Specification	
Operational Temperature	-40~85℃
Operational Humidity	5%-95% (No Condensation)
Ingress Protection Rating	IP20
Input parameters	
Channel Number	8 channels input
LED Indicator	8 channels input LED indicator
Turn-on voltage	Min.10Vdc to Max.28Vdc
Turn-off Voltage	Max.5Vdc
Turn-on current	Max.5mA/channel@28V
Input impedance	>7.5kΩ
Input delay	OFF to ON: Max.3ms ON to OFF: Max.2ms
Filter time	Default 10ms
Sample frequency	500Hz
Counter frequency	<200Hz

3 Hardware interfaces

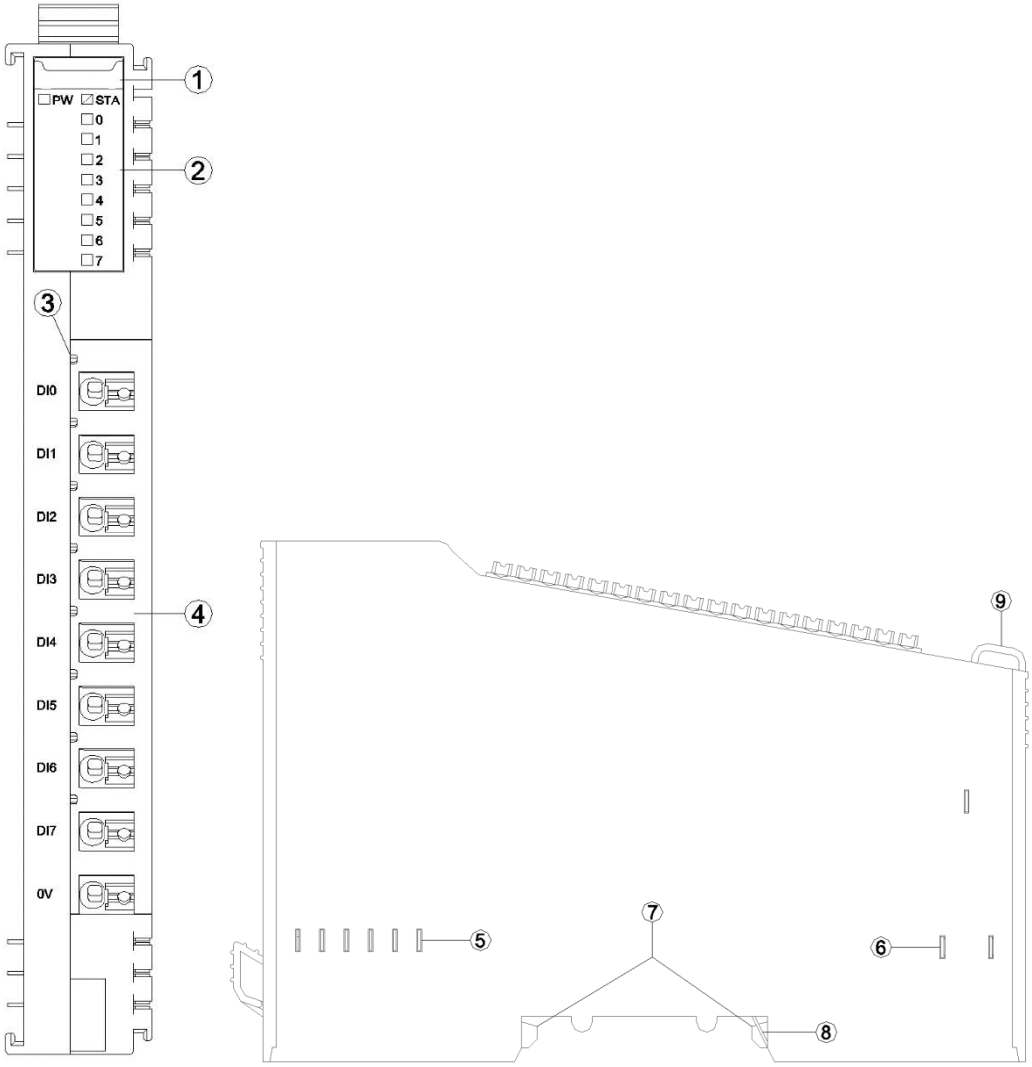

① Module Type

② State indicator

③ Channel indicator

④ Wiring Terminal and identification

⑤ Internal Bus

⑥ Field Power

⑦ Buckle

⑧ Grounding Spring Sheet

⑨ Fixed Wiring Harness

3.1 LED indicator definition

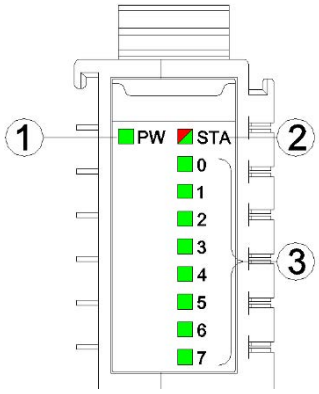

① Power LED indicator (green)

② Module State LED indicator (red/green)

③ Input channel LED indicator (green)

PW Power State (GREEN)	Definition
ON	Internal bus Power Normal
OFF	Internal bus Power Failure
STA Module State (RED/GREEN)	Definition
Green slow flash (2.5Hz)	Module internal bus is not started
Red slow flash (2.5Hz)	Module internal bus offline
ON (GREEN)	Operation normal
Flash(2.5Hz) (RED/GREEN)	Upgrading mode
Flash(10Hz) (RED/GREEN)	Firmware Update
Double Flash (RED)	Module Exception has been soft-restarted
0-7 channel LED indicator	Definition
ON	Input signal valid
OFF	Input signal invalid

3.2 Field channel LED indicator (Green)

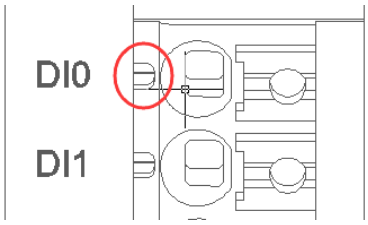

When input signal of input channel is valid, the corresponding field channel LED indicator is on.

3.3 Terminal definition

Terminal Number	Symbol	Description
1	DI0	Signal input
2	DI1	
3	DI2	
4	DI3	
5	DI4	
6	DI5	
7	DI6	
8	DI7	
9	0V	Power V-

It is recommended to use cables with cores smaller than 1mm².

The cold-pressed terminal parameters are as follows:

4 Wiring

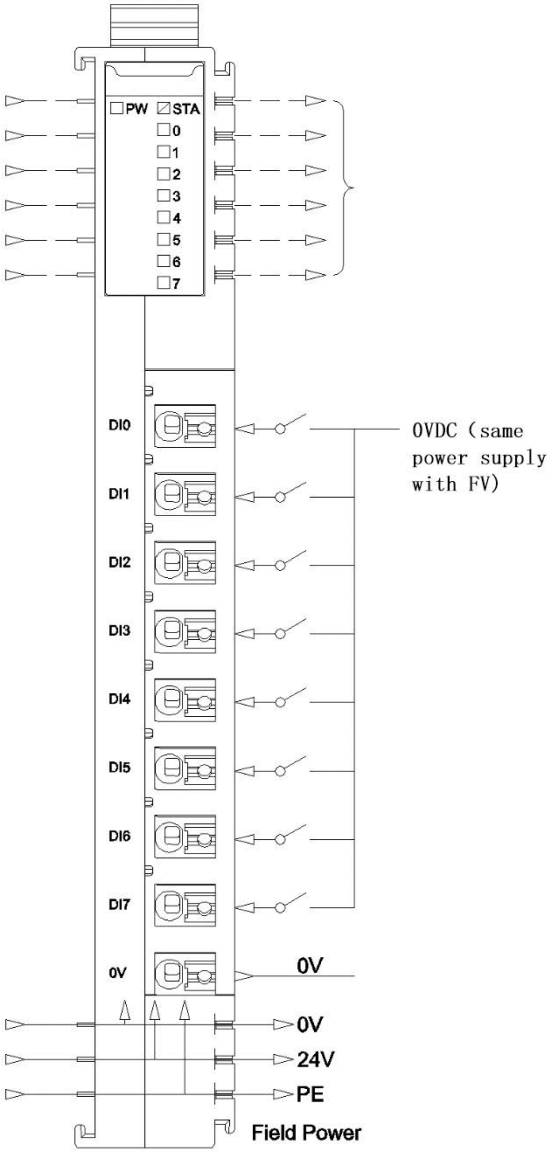
PW
STA
0
1
2
3
4
5
6
7
DI0
DI1
DI2
DI3
DI4
DI5
DI6
DI7
0V
0VDC (same power supply with FV)
0V
0V
24V
PE
Field Power

5 Process data definition

<8DI Input Status> Submodule process data definition

Input data								
Bit No	Bit 7	Bit 6	Bit 5	Bit 4	Bit 3	Bit 2	Bit 1	Bit 0
Byte 0	DI Ch#7	DI Ch#6	DI Ch#5	DI Ch#4	DI Ch#3	DI Ch#2	DI Ch#1	DI Ch#0

Data description:

DI Ch#(0-7): When the corresponding channel input signal is valid, the bit is 1, and when the input is invalid, it is 0.

0：Input signal invalid

1：Input signal valid

<8DI Counter Submodule> Submodule process data definition:

Input data								
Bit No	Bit 7	Bit 6	Bit 5	Bit 4	Bit 3	Bit 2	Bit 1	Bit 0
Byte 0	Counter Value Ch#0							
Byte 1								
Byte 2								
Byte 3								
Byte 4	Counter Value Ch#1							
Byte 5								
Byte 6								
Byte 7								
Byte 8	Counter Value Ch#2							
Byte 9								
Byte 10								
Byte 11								
Byte 12	Counter Value Ch#3							
Byte 13								
Byte 14								
Byte 15								
Byte 16	Counter Value Ch#4							
Byte 17								
Byte 18								
Byte 19								
Byte 20	Counter Value Ch#5							
Byte 21								
Byte 22								
Byte 23								
Byte 24	Counter Value Ch#6							

Byte 25								
Byte 26								
Byte 27								
Byte 28	Counter Value Ch#7							
Byte 29								
Byte 30								
Byte 31								
Output data								
Bit No	Bit 7	Bit 6	Bit 5	Bit 4	Bit 3	Bit 2	Bit 1	Bit 0
Byte 0	Counter Reset Ch#7	Counter Reset Ch#6	Counter Reset Ch#5	Counter Reset Ch#4	Counter Reset Ch#3	Counter Reset Ch#2	Counter Reset Ch#1	Counter Reset Ch#0

Data description:

Counter Value Ch#(0-7): Count value, 32-bit unsigned integer, automatically zeroing after overflow.

Counter Reset Ch#(0-7): When the data bit changes from 0 to 1 (rising edge), the input counter of the corresponding channel is cleared.

Note: the maximum counting frequency of the input channel is 200Hz. When the input signal exceeds this frequency, the counting result may be inconsistent with the actual value.

6 Configuration parameter definitions

<8DI Input Status> Submodule configuration parameter definition

Configuration parameters								
Bit No	Bit 7	Bit 6	Bit 5	Bit 4	Bit 3	Bit 2	Bit 1	Bit 0
Byte 0	Input Filtering Time(ms)							
Byte 1								
Byte 2	Reserved					Input Holding Time(ms)		

Data description:

Input Filtering Time(ms): Input filter time of Channel (ms) (Default: 10)

Input Holding Time(ms): Signal input holding time of Channel (ms) (Default:0)

0: Disable

1: 200ms

2: 500ms

3: 1000ms

4: 1500ms

5: 2000ms

6: 3000ms

7: 5000ms

<8DI Counter Submodule> Submodule configuration parameter definition

Configuration parameters								
Bit No	Bit 7	Bit 6	Bit 5	Bit 4	Bit 3	Bit 2	Bit 1	Bit 0
Byte 0	Reserved				Storage Enable	Storage Function	32Bit Data Format	
Byte 1	Count Mode Ch#3		Count Mode Ch#2		Count Mode Ch#1		Count Mode Ch#0	
Byte 2	Count Mode Ch#7		Count Mode Ch#6		Count Mode Ch#5		Count Mode Ch#4	
Byte 3…4	Reserved							
Byte 5	Count Direction Ch#7	Count Direction Ch#6	Count Direction Ch#5	Count Direction Ch#4	Count Direction Ch#3	Count Direction Ch#2	Count Direction Ch#1	Count Direction Ch#0

Data description:

32Bit Data Format：Byte transfer order of Channel count value (Default: 0)

0：AB-CD

1：BA-DC

2：CD-AB

3：DC-BA

Storage Function：Storage Function is supported or not, read only attribute, and this value is the actual value of the module when uploading device parameters.

0：storage is not supported

1：storage is supported

Storage Enable：Storage enable，when the Storage Function enables, the IO module will save the count value in real time to non-volatile memory, and load the last saved count value on the next power on. (Default: 1)

0：Disabled

1：Enable

Count Mode Ch#(0-7)：Count mode of the input channel. (Default: 0)

0：rising edge count

1：falling edge count

2：double edge count

Count Direction Ch#(0-7)：The counting direction of the input channel. (Default: 0)

0：count up

1：count down

A Dimension drawing

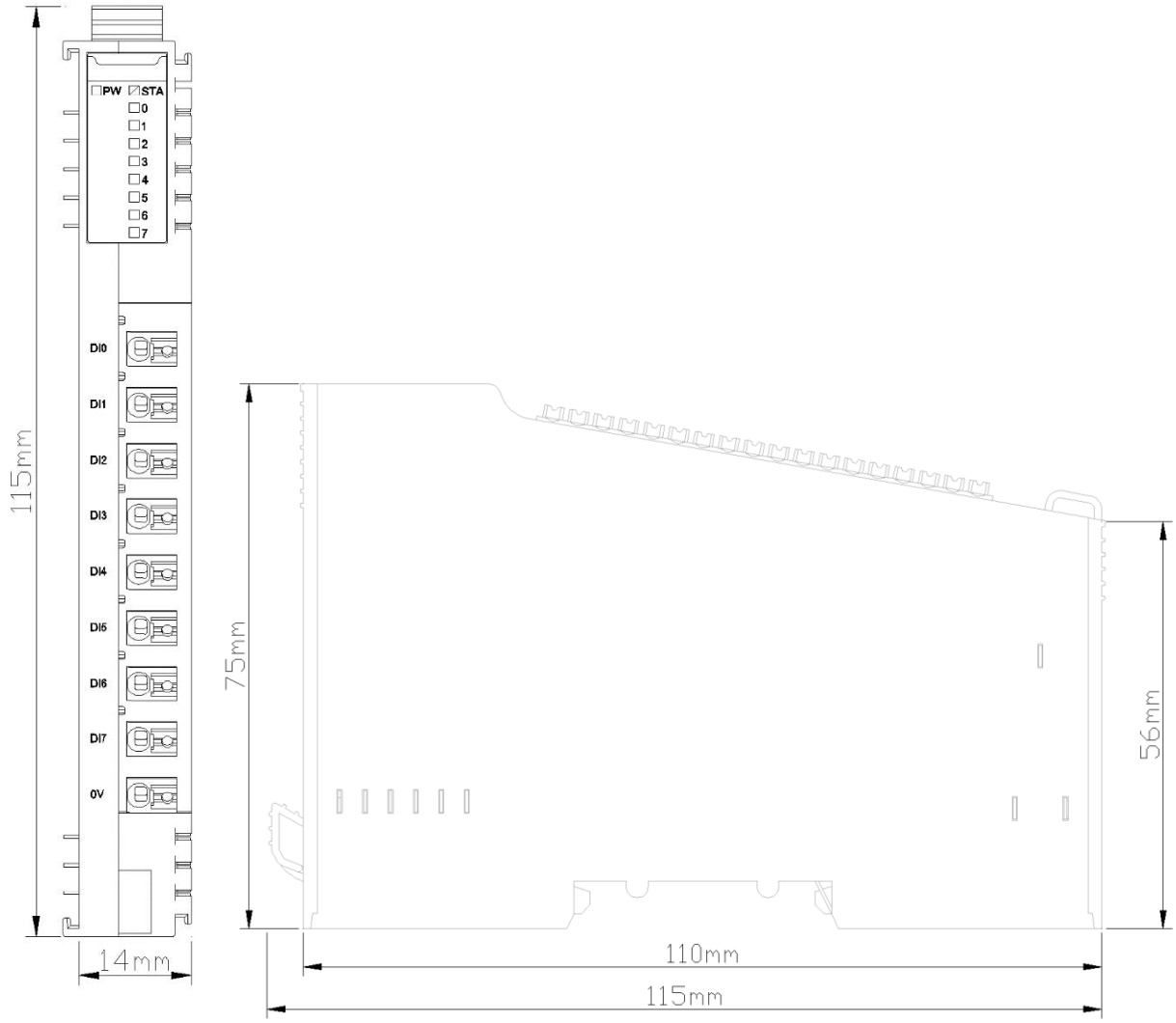

NT-122F 16 channels digital input/0VDC/NPN

1 Module features

◆ the Module supports 16 channels digital input, supports source input, the input voltage is 0V and the input low level is valid.

◆ the module could collect the digital output signal of field equipment (dry contact or active output).

◆ the module could be connected to a 2-wire or 3-wire digital sensor.

◆ the internal bus of the module and field input are isolated by optocoupler.

◆ the module supports input signal holding function, holding time can be set.

◆ the module carries with 16 digital input channel LED indicator.

◆ after adding counting submodule, the counting function is effective.

◆ each input channel of the module supports 32-bit counter with counting frequency <200Hz.

◆ the module could be set the digital signal input filter time and counter byte transmission sequence.

◆ each channel of the module could be set the counting mode and counting direction independently.

2 Technical parameters

General parameters	
Power Consumption	Max.60mA@5.0Vdc
Isolation	I/O to internal bus: opto-couple isolation (3KVrms)
Field Power	Nominal:24Vdc, Range:22-28Vdc
Wiring	I/O Wiring：Max.1.0mm² (AWG 17)
Mounting Type	35mm DIN-Rail
Size	115*14*75mm
Weight	65g
Environment Specification	
Operational Temperature	-40~85℃
Operational Humidity	5%-95% (No Condensation)
Ingress Protection Rating	IP20

Input parameters	
Channel Number	16 channels source input
LED Indicator	16 channels input LED indicator
Turn-on voltage	Min.10Vdc to Max.28Vdc
Turn-off Voltage	Max.5Vdc
Turn-on current	Max.5mA/channel@28V
Input impedance	>7.5kΩ
Input delay	OFF to ON :Max.3ms ON to OFF :Max.2ms
Filter time	Default 10ms
Sample frequency	500Hz
Counter frequency	<200Hz

3 Hardware interfaces

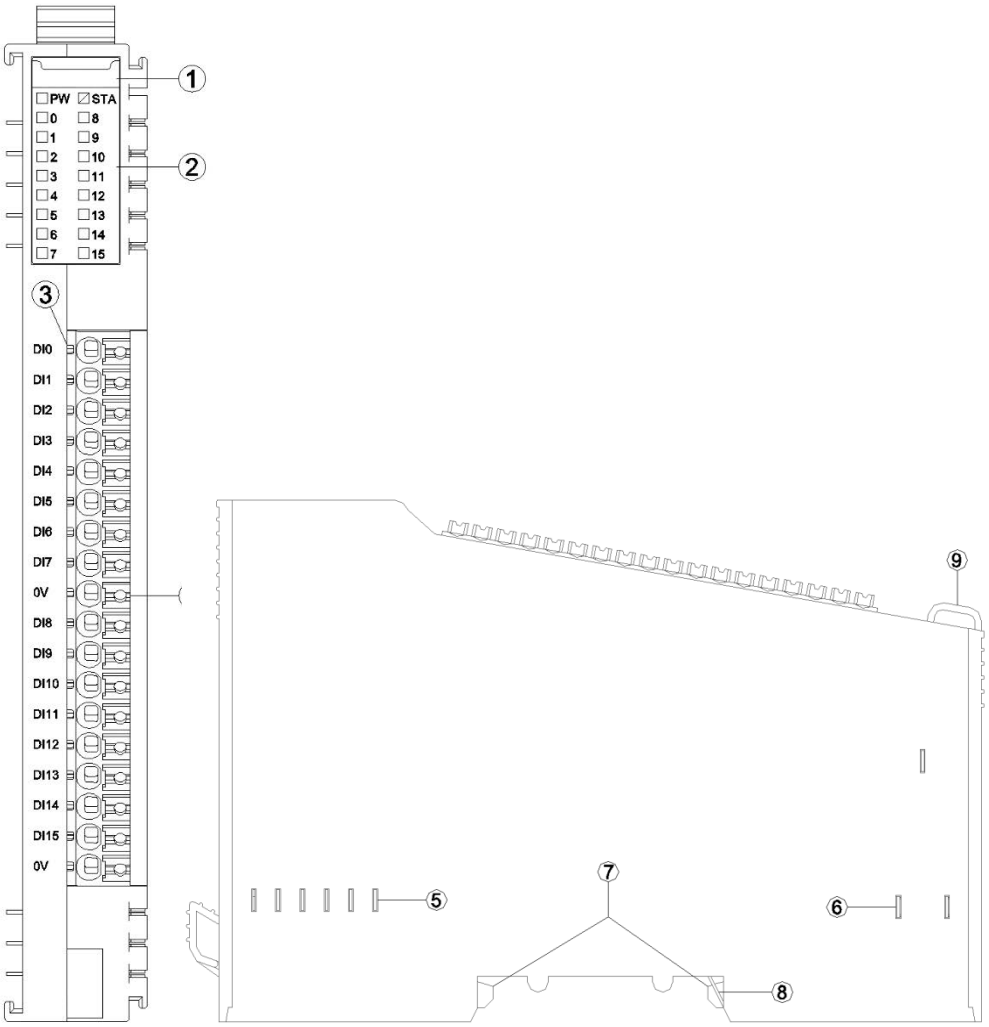

① Module Type

② State indicator

③ Channel indicator

④ Wiring Terminal and identification

⑤ Internal Bus

⑥ Field Power

⑦ Buckle

⑧ Grounding Spring Sheet

⑨ Fixed Wiring Harness

3.1 LED indicator definition

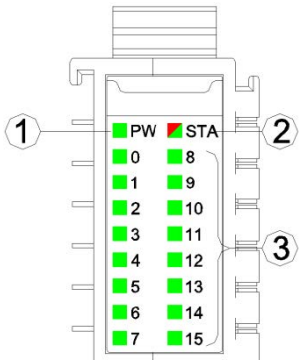

① Power LED indicator (green)

② Module State LED indicator (red/green)

③ Input channel LED indicator (green)

PW Power State (GREEN)	Definition
ON	Internal bus Power Normal
OFF	Internal bus Power Failure
STA Module State (RED/GREEN)	Definition
Green slow flash (2.5Hz)	Module internal bus is not started
Red slow flash (2.5Hz)	Module internal bus offline
ON (GREEN)	Operation normal
Flash(2.5Hz) (RED/GREEN)	Upgrading mode
Flash(10Hz) (RED/GREEN)	Firmware Update
Double Flash (RED)	Module Exception has been soft-restarted
0-15 channel indicator light	Definition
ON	Input signal valid
OFF	Input signal invalid

3.2 Field channel LED indicator (Green)

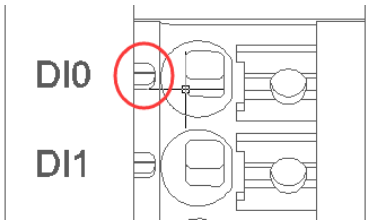

When input signal of input channel is valid, the corresponding field channel LED indicator is on

3.3 Terminal definition

Terminal Number	Symbol	Description
1	DI0	Signal input
2	DI1	
3	DI2	
4	DI3	
5	DI4	
6	DI5	
7	DI6	
8	DI7	
9	0V	Power V-
10	DI8	Signal input
11	DI9	
12	DI10	
13	DI11	
14	DI12	
15	DI13	
16	DI14	
17	DI15	
18	24V	Power output V-

It is recommended to use cables with cores smaller than 1mm².
The cold-pressed terminal parameters are as follows:

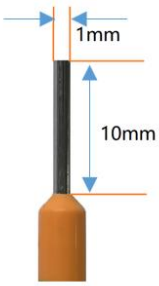

4 Wiring

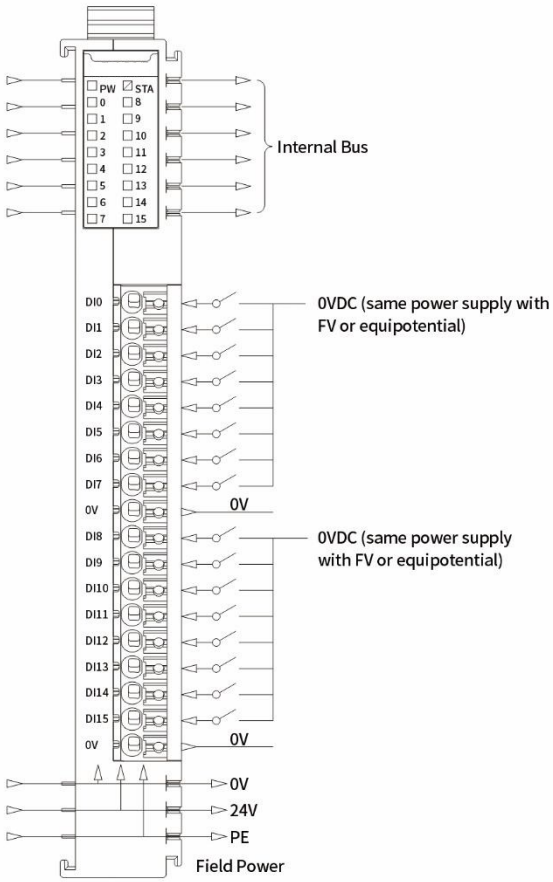

5 Process data definition

<16DI Input State> Submodule process data definition

Input data								
Bit No	Bit 7	Bit 6	Bit 5	Bit 4	Bit 3	Bit 2	Bit 1	Bit 0
Byte 0	DI Ch#7	DI Ch#6	DI Ch#5	DI Ch#4	DI Ch#3	DI Ch#2	DI Ch#1	DI Ch#0
Byte 1	DI Ch#15	DI Ch#14	DI Ch#13	DI Ch#12	DI Ch#11	DI Ch#10	DI Ch#9	DI Ch#8

Data description:

DI Ch#(0-15): When the corresponding channel input signal is valid, the bit is 1,

and when the input is invalid, it is 0.

0：Input signal invalid

1：Input signal valid

<16DI Counter Submodule> Submodule process data definition:

Input data								
Bit No	Bit 7	Bit 6	Bit 5	Bit 4	Bit 3	Bit 2	Bit 1	Bit 0
Byte 0	Counter Value Ch#0							
Byte 1								
Byte 2								
Byte 3								
Byte 4	Counter Value Ch#1							
Byte 5								
Byte 6								
Byte 7								
Byte 8	Counter Value Ch#2							
Byte 9								
Byte 10								
Byte 11								
Byte 12	Counter Value Ch#3							
Byte 13								
Byte 14								
Byte 15								
Byte 16	Counter Value Ch#4							
Byte 17								
Byte 18								
Byte 19								
Byte 20	Counter Value Ch#5							
Byte 21								
Byte 22								
Byte 23								
Byte 24	Counter Value Ch#6							
Byte 25								
Byte 26								
Byte 27								
Byte 28	Counter Value Ch#7							
Byte 29								
Byte 30								
Byte 31								
Byte 32	Counter Value Ch#8							

Byte 33	
Byte 34	
Byte 35	
Byte 36	Counter Value Ch#9
Byte 37	
Byte 38	
Byte 39	
Byte 40	Counter Value Ch#10
Byte 41	
Byte 42	
Byte 43	
Byte 44	Counter Value Ch#11
Byte 45	
Byte 46	
Byte 47	
Byte 48	Counter Value Ch#12
Byte 49	
Byte 50	
Byte 51	
Byte 52	Counter Value Ch#13
Byte 53	
Byte 54	
Byte 55	
Byte 56	Counter Value Ch#14
Byte 57	
Byte 58	
Byte 59	
Byte 60	Counter Value Ch#15
Byte 61	
Byte 62	
Byte 63	

Output data								
Bit No	Bit 7	Bit 6	Bit 5	Bit 4	Bit 3	Bit 2	Bit 1	Bit 0
Byte 0	Counter Reset Ch#7	Counter Reset Ch#6	Counter Reset Ch#5	Counter Reset Ch#4	Counter Reset Ch#3	Counter Reset Ch#2	Counter Reset Ch#1	Counter Reset Ch#0
Byte 1	Counter Reset Ch#15	Counter Reset Ch#14	Counter Reset Ch#13	Counter Reset Ch#12	Counter Reset Ch#11	Counter Reset Ch#10	Counter Reset Ch#9	Counter Reset Ch#8

Data description:

Counter Value Ch#(0-15): Count value, 32-bit unsigned integer, automatically zeroing after overflow.

Counter Reset Ch#(0-15): When the data bit changes from 0 to 1 (rising edge), the input counter of the corresponding channel is cleared.

Note: the maximum counting frequency of the input channel is 200Hz. When the input signal exceeds this frequency, the counting result may be inconsistent with the actual value.

6 Configuration parameter definitions

<16DI Input State> Submodule configuration parameter definition

Configuration parameters								
Bit No	Bit 7	Bit 6	Bit 5	Bit 4	Bit 3	Bit 2	Bit 1	Bit 0
Byte 0	Input Filtering Time(ms)							
Byte 1								
Byte 2	Reserved					Input Holding Time(ms)		

Data description:

Input Filtering Time(ms): Input filter time of Channel (ms) (Default: 10)

Input Holding Time(ms): Signal input holding time of Channel (ms) (Default:0)

0：Disable

1：200ms

2：500ms

3：1000ms

4：1500ms

5：2000ms

6：3000ms

7：5000ms

<16DI Counter Submodule> Submodule configuration parameter definition

Configuration parameters								
Bit No	Bit 7	Bit 6	Bit 5	Bit 4	Bit 3	Bit 2	Bit 1	Bit 0
Byte 0	Reserved				Storage Enable	Storage Function	32Bit Data Format	
Byte 1	Count Mode Ch#3		Count Mode Ch#2		Count Mode Ch#1		Count Mode Ch#0	
Byte 2	Count Mode Ch#7		Count Mode Ch#6		Count Mode Ch#5		Count Mode Ch#4	
Byte 3	Count Mode Ch#11		Count Mode Ch#10		Count Mode Ch#9		Count Mode Ch#8	
Byte 4	Count Mode Ch#15		Count Mode Ch#14		Count Mode Ch#13		Count Mode Ch#12	

Byte 5	Count Direction Ch#7	Count Direction Ch#6	Count Direction Ch#5	Count Direction Ch#4	Count Direction Ch#3	Count Direction Ch#2	Count Direction Ch#1	Count Direction Ch#0
Byte 6	Count Direction Ch#15	Count Direction Ch#14	Count Direction Ch#13	Count Direction Ch#12	Count Direction Ch#11	Count Direction Ch#10	Count Direction Ch#9	Count Direction Ch#8

Data description:

32Bit Data Format: Byte transfer order of Channel count value (Default: 0)

0：AB-CD

1：BA-DC

2：CD-AB

3：DC-BA

Storage Function: Storage Function is supported or not, read only attribute, and this value is the actual value of the module when uploading device parameters.

0：storage is not supported

1：storage is supported

Storage Enable：Storage enable，when the Storage Function enables, the IO module will save the count value in real time to non-volatile memory, and load the last saved count value on the next power on. (Default: 1)

0：Disabled

1：Enable

Count Mode Ch# (0-15)：Count mode of the input channel. (Default: 0)

0: rising edge count

1: falling edge count

2: double edge count

Count Direction Ch# (0-15): The counting direction of the input channel. (Default: 0)

0: count up

1: count down

A Dimension drawing

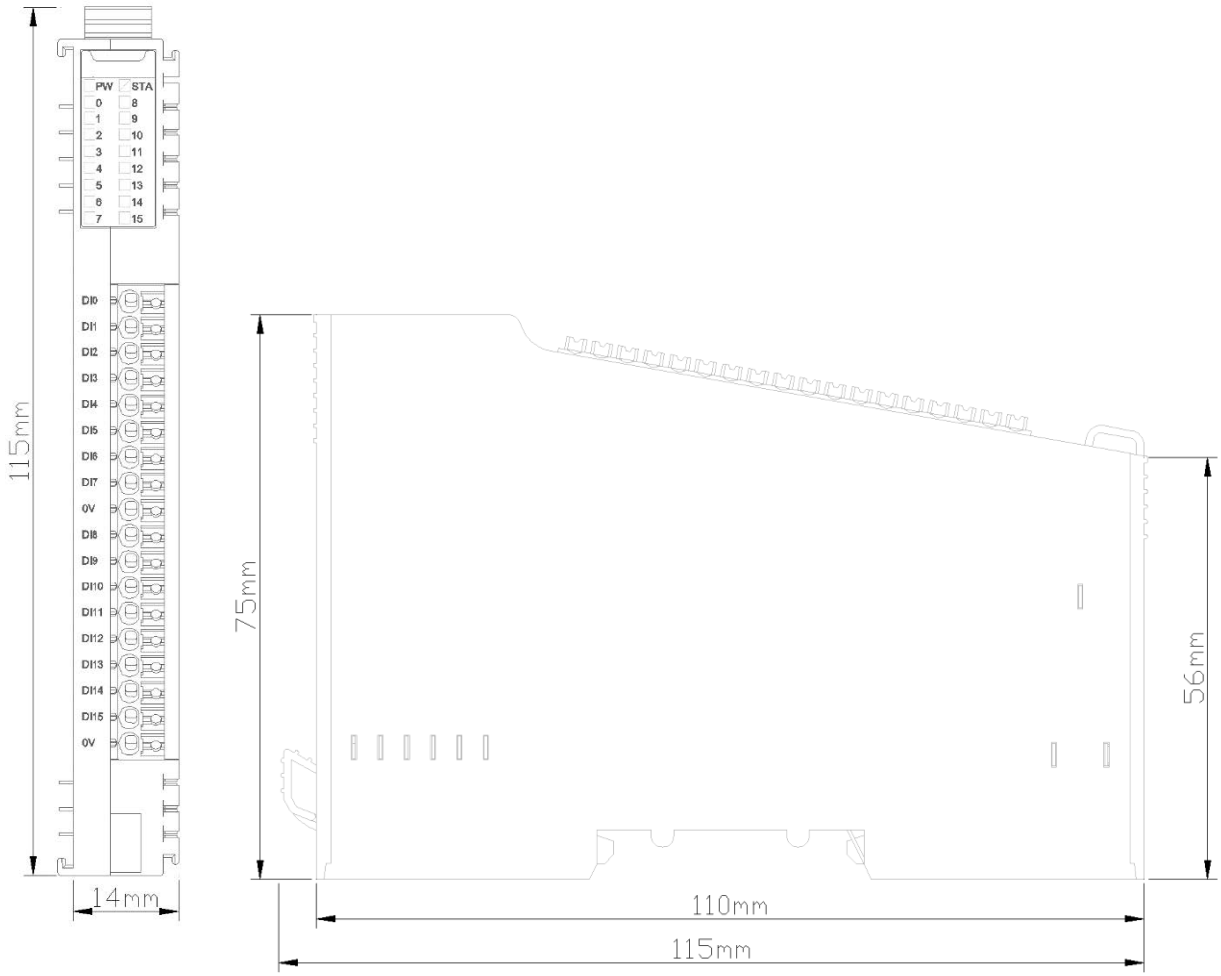

NT-124H 32 channels digital input/24VDC/PNP or NPN

1 Module features

◆ the module supports 32 channels digital input, it supports sink input and the input high level is valid as it could support PNP sensor; it also supports source input and the input low level is valid as it could support NPN sensor.

◆ the module could collect the digital output signal of field equipment (dry contact or active output).

◆ the module could be connected to 2-wire or 3-wire digital sensor.

◆ the internal bus of the module and field input are isolated by optocoupler.

◆ the module supports input signal holding function, holding time can be set.

◆ after adding counting submodule, the counting function is effective.

◆ each input channel of the module supports 32-bit counter with counting frequency <200Hz.

◆ the module could be set the digital signal input filter time and counter byte transmission sequence.

◆ each channel of the module could be set the counting mode and counting direction independently.

2 Technical parameters

General parameters	
Power Consumption	Max.60mA@5.0Vdc
Isolation	I/O to internal bus: opto-couple isolation (3KVrms)
Field Power	Nominal:24Vdc, Range:22-28Vdc
Wiring	34P male connector 2.54mm Pin header
Mounting Type	35mm DIN-Rail
Size	115*14*75mm
Weight	65g
Environment Specification	
Operational Temperature	-40~85℃
Operational Humidity	5%-95% (No Condensation)
Ingress Protection Rating	IP20
Input parameters	
Channel Number	32 channels input
LED Indicator	32 channels input LED indicator
Turn-on voltage	High input: Min.10Vdc to Max.28Vdc (Common Terminal:0Vdc) Low input: Min.0Vdc to Max.14Vdc (Common Terminal:24Vdc)
Turn-off voltage	High input:Max.5Vdc (Common Terminal:0Vdc) Low input: Min.19Vdc (Common Terminal:24Vdc)
Turn-on current	Max.5mA/channel@28V
Input impedance	>7.5kΩ
Input delay	OFF to ON: Max.3ms ON to OFF: Max.2ms
Filter time	Default 10ms
Sample frequency	500Hz
Counter frequency	<200Hz

3 Hardware interfaces

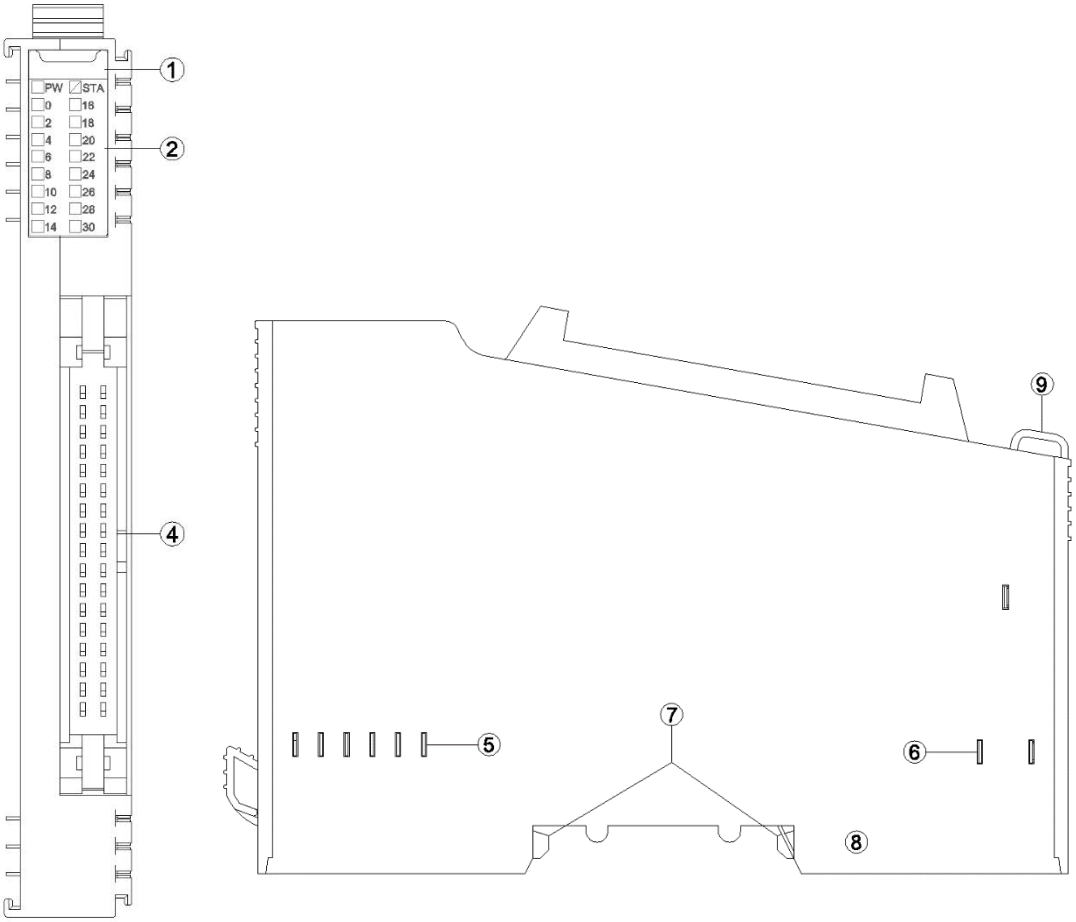

① Module Type

② State indicator

④ 34P male connector

⑤ Internal Bus

⑥ Field Power

⑦ Buckle

⑧ Grounding Spring Sheet

⑩ Fixed Wiring Harness

3.1 LED indicator definition

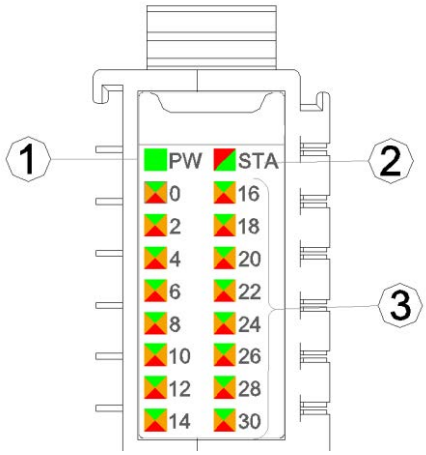

① Power LED indicator (green)

② Module State LED indicator (red/green)

③ Input channel LED indicator (green/red/orange)

PW Power State	Definition
ON	Internal bus Power Normal
OFF	Internal bus Power Failure
STA Module State Indicator	Definition
Green slow flash (2.5Hz)	Module internal bus is not started
Red slow flash (2.5Hz)	Module internal bus offline
ON (GREEN)	Operation normal
Flash(2.5Hz)(RED/GREEN)	Upgrading mode
Flash(10Hz) (RED/GREEN)	Firmware Update
Double Flash (RED)	Module Exception has been soft-restarted
0-31 channel indicator light	Definition
ON (GREEN)	Indicates that the input channel signal is valid
ON (RED)	Indicates that the input channel +1 signal is valid
ON (ORANGE)	Indicates that the input channel and channel +1 signal are valid
OFF	Input signal is invalid

3.2 Terminal definition

Description	Symbol	Terminal Number	Terminal Number	Symbol	Description
Signal input	DI0	1	18	DI16	Signal input
	DI1	2	19	DI17	
	DI2	3	20	DI18	
	DI3	4	21	DI19	
	DI4	5	22	DI20	
	DI5	6	23	DI21	
	DI6	7	24	DI22	
	DI7	8	25	DI23	
	DI8	9	26	DI24	
	DI9	10	27	DI25	
	DI10	11	28	DI26	
	DI11	12	29	DI27	
	DI12	13	30	DI28	
	DI13	14	31	DI29	
	DI14	15	32	DI30	
	DI15	16	33	DI31	
0V or 24V	COMA	17	34	COMB	0V or 24V

4 Wiring

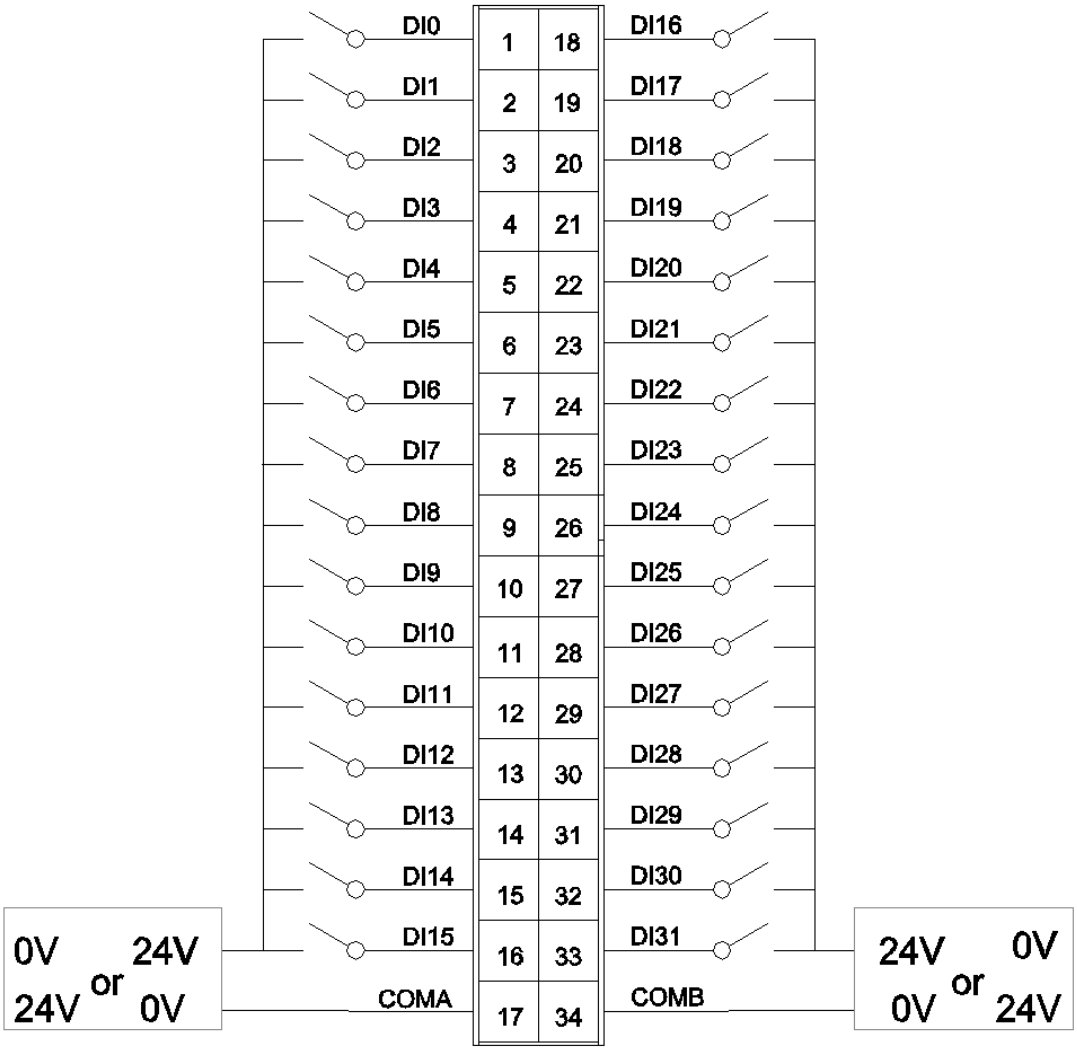
DI0
DI1
DI2
DI3
DI4
DI5
DI6
DI7
DI8
DI9
DI10
DI11
DI12
DI13
DI14
DI15
COMA
1 18
2 19
3 20
4 21
5 22
6 23
7 24
8 25
9 26
10 27
11 28
12 29
13 30
14 31
15 32
16 33
17 34
DI16
DI17
DI18
DI19
DI20
DI21
DI22
DI23
DI24
DI25
DI26
DI27
DI28
DI29
DI30
DI31
COMB
0V 24V or 24V 0V
24V 0V or 0V 24V

5 Process data definition

<32DI Input Status> Submodule process data definition

Input data								
Bit No	Bit 7	Bit 6	Bit 5	Bit 4	Bit 3	Bit 2	Bit 1	Bit 0
Byte 0	DI Ch#7	DI Ch#6	DI Ch#5	DI Ch#4	DI Ch#3	DI Ch#2	DI Ch#1	DI Ch#0
Byte 1	DI Ch#15	DI Ch#14	DI Ch#13	DI Ch#12	DI Ch#11	DI Ch#10	DI Ch#9	DI Ch#8
Byte 2	DI Ch#23	DI Ch#22	DI Ch#21	DI Ch#20	DI Ch#19	DI Ch#18	DI Ch#17	DI Ch#16
Byte 3	DI Ch#31	DI Ch#30	DI Ch#29	DI Ch#28	DI Ch#27	DI Ch#26	DI Ch#25	DI Ch#24

Data description：

DI Ch#(0-31)：When the corresponding channel input signal is valid, the bit is 1, and when the input is invalid, it is 0.

0：Input signal invalid

1：Input signal valid

<16DI Counter Submodule> Submodule process data definition

Input data								
Bit No	Bit 7	Bit 6	Bit 5	Bit 4	Bit 3	Bit 2	Bit 1	Bit 0
Byte 0	Counter Value Ch#0							
Byte 1								
Byte 2								
Byte 3								
Byte 4	Counter Value Ch#1							
Byte 5								
Byte 6								
Byte 7								
Byte 8	Counter Value Ch#2							
Byte 9								
Byte 10								
Byte 11								
Byte 12	Counter Value Ch#3							
Byte 13								
Byte 14								
Byte 15								
Byte 16	Counter Value Ch#4							
Byte 17								
Byte 18								

Byte 19	
Byte 20	Counter Value Ch#5
Byte 21	
Byte 22	
Byte 23	
Byte 24	Counter Value Ch#6
Byte 25	
Byte 26	
Byte 27	
Byte 28	Counter Value Ch#7
Byte 29	
Byte 30	
Byte 31	
…	…
…	
…	
…	
…	…
…	
…	
…	
Byte 116	Counter Value Ch#29
Byte 117	
Byte 118	
Byte 119	
Byte 120	Counter Value Ch#30
Byte 121	
Byte 122	
Byte 123	
Byte 124	Counter Value Ch#31
Byte 125	
Byte 126	
Byte 127	

Output data								
Bit No	Bit 7	Bit 6	Bit 5	Bit 4	Bit 3	Bit 2	Bit 1	Bit 0
Byte 0	Counter Reset Ch#7	Counter Reset Ch#6	Counter Reset Ch#5	Counter Reset Ch#4	Counter Reset Ch#3	Counter Reset Ch#2	Counter Reset Ch#1	Counter Reset Ch#0
Byte 1	Counter Reset Ch#15	Counter Reset Ch#14	Counter Reset Ch#13	Counter Reset Ch#12	Counter Reset Ch#11	Counter Reset Ch#10	Counter Reset Ch#9	Counter Reset Ch#8
Byte 2	Counter Reset Ch#23	Counter Reset Ch#22	Counter Reset Ch#21	Counter Reset Ch#20	Counter Reset Ch#19	Counter Reset Ch#18	Counter Reset Ch#17	Counter Reset Ch#16
Byte 3	Counter Reset Ch#31	Counter Reset Ch#30	Counter Reset Ch#29	Counter Reset Ch#28	Counter Reset Ch#27	Counter Reset Ch#26	Counter Reset Ch#25	Counter Reset Ch#24

Data description:

Counter Value Ch#(0-31)： Count value, 32-bit unsigned integer, automatically zeroing after overflow.

Counter Reset Ch#(0-31)： When the data bit changes from 0 to 1 (rising edge), the input counter of the corresponding channel is cleared.

Note: the maximum counting frequency of the input channel is 200Hz. When the input signal exceeds this frequency, the counting result may be inconsistent with the actual value.

6 Configuration parameter definitions

Configuration parameters								
Bit No	Bit 7	Bit 6	Bit 5	Bit 4	Bit 3	Bit 2	Bit 1	Bit 0
Byte 0	Input Filtering Time(ms)							
Byte 1								
Byte 2	Reserved					Input Holding Time(ms)		

Data description：

Input Filtering Time(ms)：Input filter time of Channel (ms) (Default: 10)

Input Holding Time(ms)：Signal input holding time of Channel (ms) (Default:0)

0：Disable

1：200ms

2：500ms

3：1000ms

4：1500ms

5：2000ms

6：3000ms

7：5000ms

<32DI Counter Submodule>Submodule configuration parameter definition

Configuration parameters								
Bit No	Bit 7	Bit 6	Bit 5	Bit 4	Bit 3	Bit 2	Bit 1	Bit 0
Byte 0	Reserved				Storage Enable	Storage Function	32Bit Data Format	
Byte 1	Count Mode Ch#3		Count Mode Ch#2		Count Mode Ch#1		Count Mode Ch#0	
Byte 2	Count Mode Ch#7		Count Mode Ch#6		Count Mode Ch#5		Count Mode Ch#4	
Byte 3	Count Mode Ch#11		Count Mode Ch#10		Count Mode Ch#9		Count Mode Ch#8	
Byte 4	Count Mode Ch#15		Count Mode Ch#14		Count Mode Ch#13		Count Mode Ch#12	
Byte 5	Count Mode Ch#19		Count Mode Ch#18		Count Mode Ch#17		Count Mode Ch#16	
Byte 6	Count Mode Ch#23		Count Mode Ch#22		Count Mode Ch#21		Count Mode Ch#20	
Byte 7	Count Mode		Count Mode		Count Mode		Count Mode	

	Ch#27		Ch#26		Ch#25		Ch#24	
Byte 8	Count Mode Ch#31		Count Mode Ch#30		Count Mode Ch#29		Count Mode Ch#28	
Byte 9	Count Direction Ch#7	Count Direction Ch#6	Count Direction Ch#5	Count Direction Ch#4	Count Direction Ch#3	Count Direction Ch#2	Count Direction Ch#1	Count Direction Ch#0
Byte 10	Count Direction Ch#15	Count Direction Ch#14	Count Direction Ch#13	Count Direction Ch#12	Count Direction Ch#11	Count Direction Ch#10	Count Direction Ch#9	Count Direction Ch#8
Byte 11	Count Direction Ch#23	Count Direction Ch#22	Count Direction Ch#21	Count Direction Ch#20	Count Direction Ch#19	Count Direction Ch#18	Count Direction Ch#17	Count Direction Ch#16
Byte 12	Count Direction Ch#31	Count Direction Ch#30	Count Direction Ch#29	Count Direction Ch#28	Count Direction Ch#27	Count Direction Ch#26	Count Direction Ch#25	Count Direction Ch#24

Data description:

32Bit Data Format: Byte transfer order of Channel count value (Default: 0)

0：AB-CD

1：BA-DC

2：CD-AB

3：DC-BA

Storage Function: Storage Function is supported or not, read only attribute, and this value is the actual value of the module when uploading device parameters.

0：storage is not supported

1：storage is supported

Storage Enable：Storage enable，when the Storage Function enables, the IO module will save the count value in real time to non-volatile memory, and load the last saved count value on the next power on. (Default: 1)

0：Disabled

1：Enable

Count Mode Ch# (0-31)：Count mode of the input channel. (Default: 0)

0: rising edge count

1: falling edge count

2: double edge count

Count Direction Ch# (0-31): The counting direction of the input channel. (Default: 0)

0: count up

1: count down

A Dimension drawing

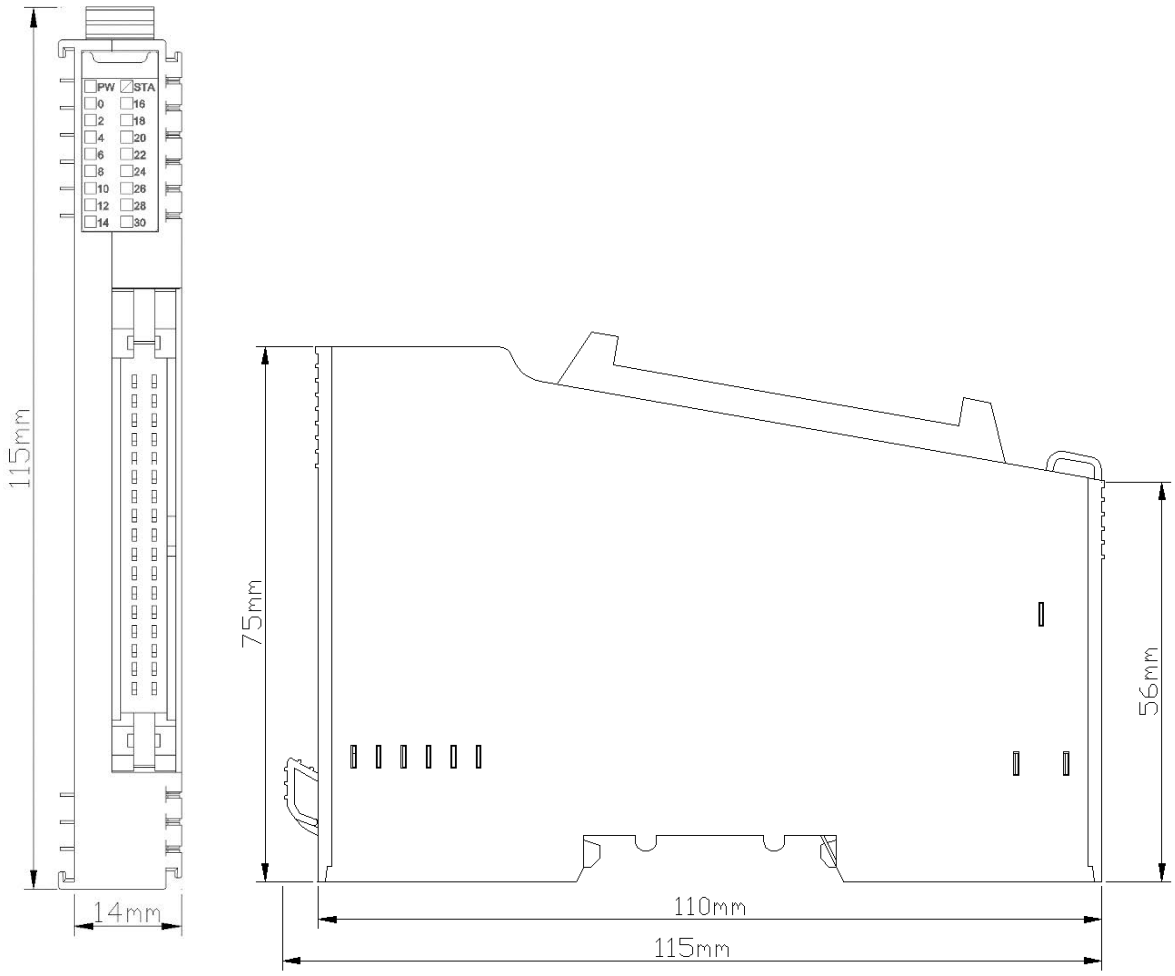

NT-2224 4 channels digital output/24VDC/ PNP

1 Module features

◆the module supports 4-channel digital output, the output voltage is 24VDC and the output high level is valid.

◆the max output current of DO single channel is 3.3 A.

◆the module could drive field equipment (relay, solenoid valve, etc.)

◆the module internal bus and field output are isolated by optocoupler

◆the module carries with 4 digital output channel LED indicator

◆the module has the functions of thermal shutdown and overcurrent protection

◆the module supports short circuit protection and overload protection

2 Technical Parameters

General parameters	
Power Consumption	Max.30mA@5.0Vdc
Isolation	I/O to internal bus: opto-couple isolation (3KVrms)
Field Power	Nominal:24Vdc, Range: 12~30Vdc
Wiring	Max.1.0mm² (AWG 17)
Mounting Type	35mm DIN-Rail
Size	115*14*75mm
Weight	65g
Environment Specification	
Operational Temperature	-40~85℃
Operational Humidity	5%~95% RH(No Condensation)
Ingress Protection Rating	IP20
Output parameters	
Channel Number	4 Channels
LED Indicator	4 Channels output LED Indicator
Rated Current	Typical value：2.2A
Leak Current	Max. value：10uA
Output Impedance	<90mΩ
Output Delay	OFF to ON:Max.5us ON to OFF:Max.200us
Protection Function	Over temperature turn-off: typical value 150℃ Overcurrent protection: typical value 12A

3 Hardware Interface

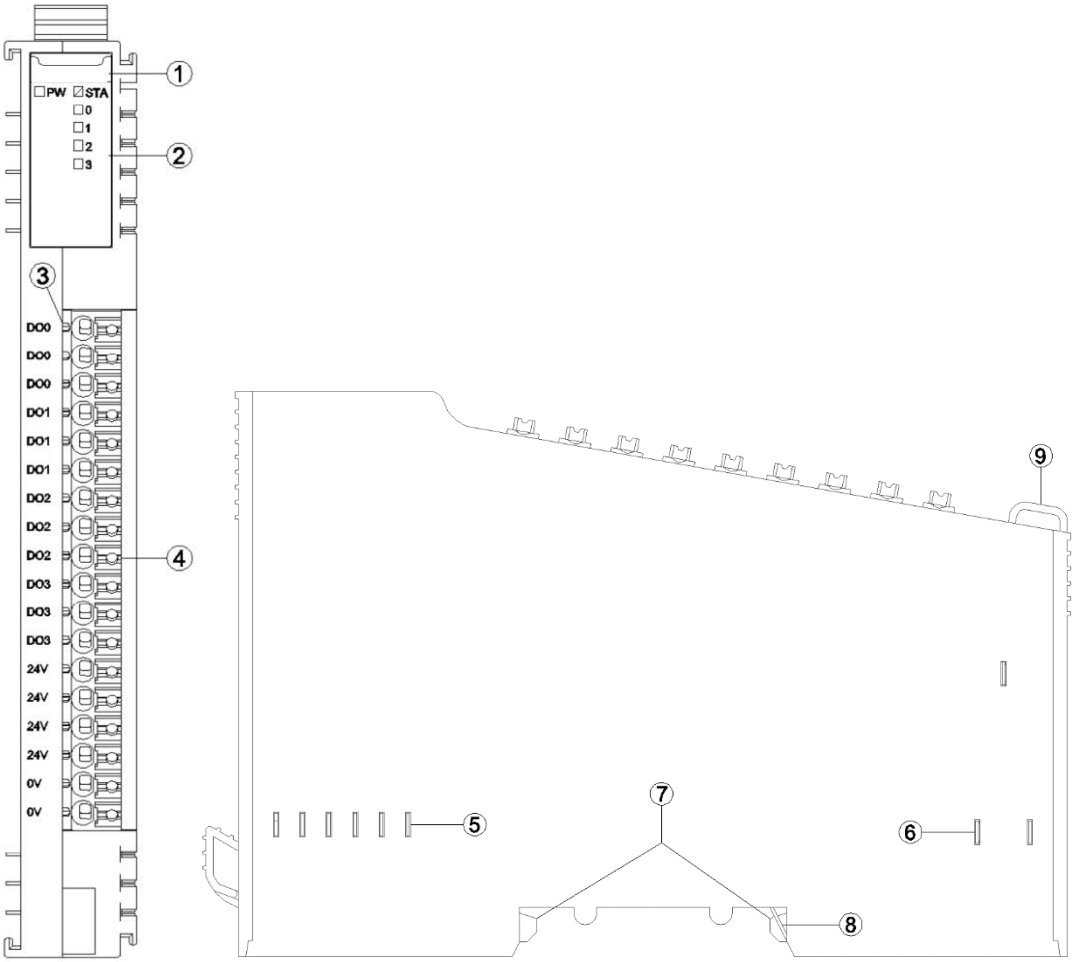

① Module Type

② State indicator

③ Channel indicator

④ Wiring Terminal and identification

⑤ Internal Bus

⑥ Field Power

⑦ Buckle

⑧ Grounding Spring Sheet

⑨ Fixed Wiring Harness

3.1 LED indicator definition

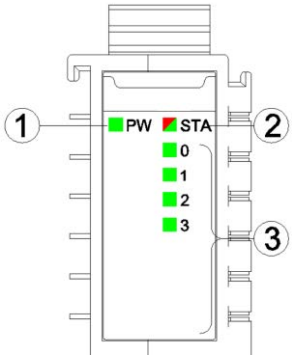

① Power LED indicator (green)

② Module State LED indicator (red/green)

③ Output channel LED indicator (green)

PW Power State (GREEN)	Definition
ON	Internal bus Power Normal
OFF	Internal bus Power Failure
STA Module State (RED/GREEN)	Definition
Green slow flash (2.5Hz)	Module internal bus is not started
Red slow flash (2.5Hz)	Module internal bus offline
ON (GREEN)	Operation normal
Flash(2.5Hz) (RED/GREEN)	Upgrading mode
Flash(10Hz) (RED/GREEN)	Firmware Update
Double Flash (RED)	Module Exception has been soft-restarted
0-3 channel LED indicator (GREEN)	Definition
ON	Output signal valid
OFF	Output signal invalid

3.2 Field channel LED indicator (Green)

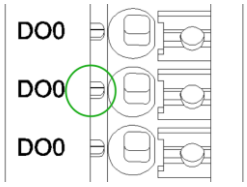

When the output signal of the output channel is valid, the corresponding field channel LED indicator is lit.

3.3 Terminal definition

Terminal Number	Symbol	Description
1	DO0	Signal output
2	DO0	
3	DO0	
4	DO1	
5	DO1	
6	DO1	
7	DO2	
8	DO2	
9	DO2	
10	DO3	
11	DO3	
12	DO3	
13	24V	Power intput *(Note1)*
14	24V	
15	24V	
16	24V	
17	0V	
18	0V	

Note 1: The module must be connected to a 24V power supply. Otherwise, the module cannot work properly. The input power of the power supply must be greater than that of all channel loads.

It is recommended to use cables with cores smaller than 1mm².

The cold-pressed terminal parameters are as follows:

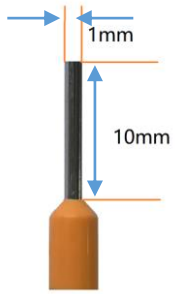

4 Wiring

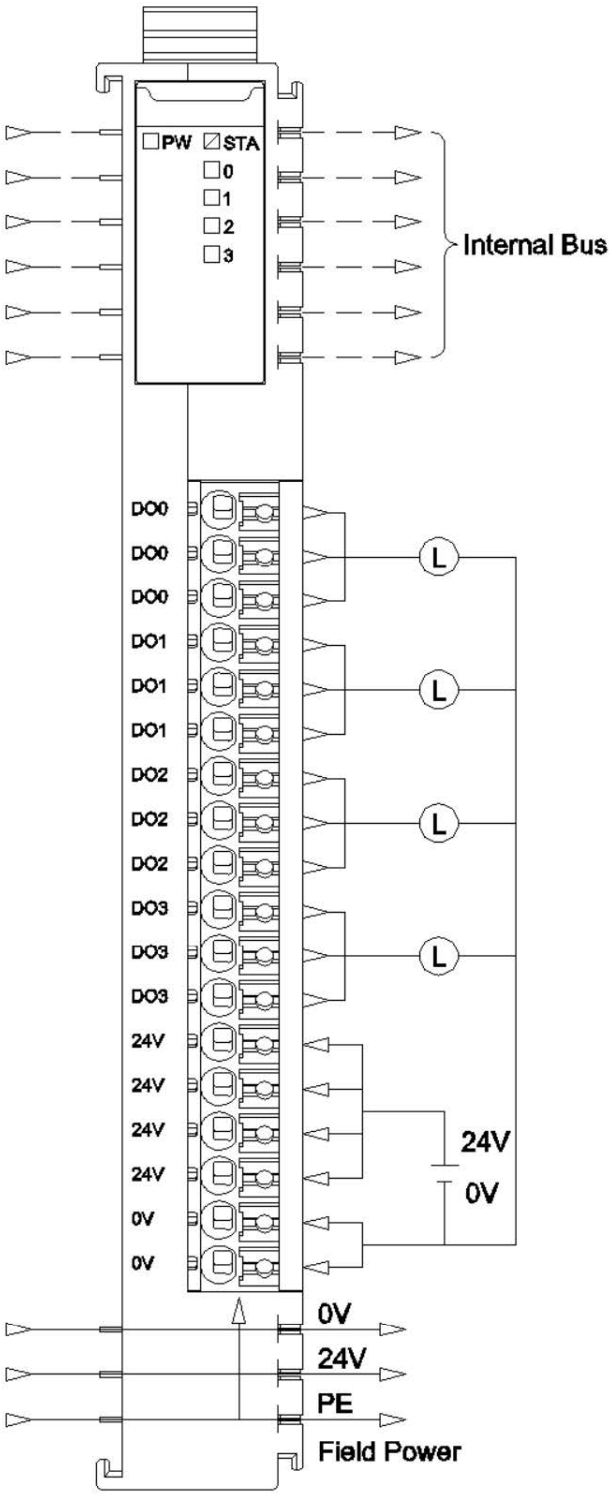
PW
STA
0
1
2
3
Internal Bus
DO0
DO0
DO0
DO1
DO1
DO1
DO2
DO2
DO2
DO3
DO3
DO3
24V
24V
24V
24V
0V
0V
L
L
L
L
24V
0V
0V
24V
PE
Field Power

5 Process data definition

Output Data								
Bit No	Bit 7	Bit 6	Bit 5	Bit 4	Bit 3	Bit 2	Bit 1	Bit 0
Byte 0	Reserve				DO Ch#3	DO Ch#2	DO Ch#1	DO Ch#0

Data description：

DO Ch#(0-3)： When the bit is 1, the output signal of the corresponding channel is effective, the output is high level, and the output is invalid when it is 0.

0: The output signal is invalid

1: The output signal is valid

6 Configuration parameters definition

Configured Parameter								
Bit No	Bit 7	Bit 6	Bit 5	Bit 4	Bit 3	Bit 2	Bit 1	Bit 0
Byte 0	Reserve				Fault Action for Output Ch#3	Fault Action for Output Ch#2	Fault Action for Output Ch#1	Fault Action for Output Ch#0
Byte 1	Reserve				Fault Value for Output Ch#3	Fault Value for Output Ch#2	Fault Value for Output Ch#1	Fault Value for Output Ch#0

Data description:

Fault Action for Output Ch#(0-3)： When IO module detects the internal bus communication is abnormal and enters offline mode, and output data will be processed in this mode. (Default: 0)

0：Hold Last Output State

1：Output Fault Value

Fault Value for Output Ch#(0-3): When the fault output mode is 1, this bit sets the fault output value, and when the internal bus of IO module is offline, this setting value will be output.(Default: 0)

0: Output low level.

1: Output high level.

A Dimension drawing

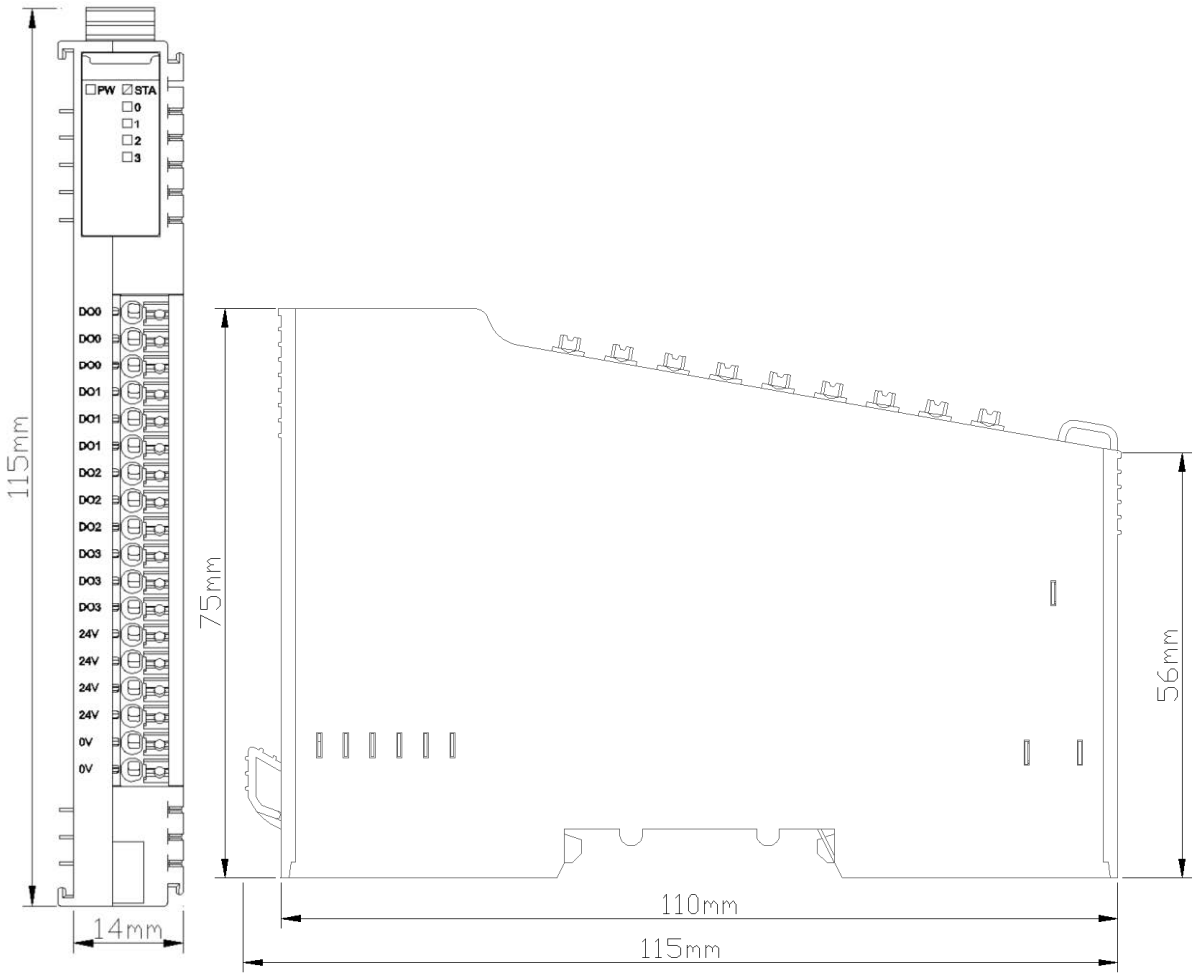

NT-2218 8 channels digital output/24VDC/NPN

1 Module features

- ◆The module supports 8-channel digital output, the output voltage is 0VDC and the output low level is valid.
- ◆The module could drive field equipment (relay, solenoid valve, etc.).
- ◆The module internal bus and field output are isolated by optocoupler.
- ◆The module carries with 8 digital output channel LED indicator.
- ◆The module has the functions of thermal shutdown and short-circuit protection.

2 Technical Parameters

General parameters	
Power Consumption	Max.64mA@5.0Vdc
Isolation	I/O to internal bus: opto-couple isolation (3KVrms)
Field Power	Nominal:24Vdc, Range:22-28Vdc
Wiring	Max.1.0mm² (AWG 17)
Mounting Type	35mm DIN-Rail
Size	115*14*75mm
Weight	65g
Environment Specification	
Operational Temperature	-40~85℃
Operational Humidity	5%~95% RH (No Condensation)
Ingress Protection Rating	IP20
Output parameters	
Channel Number	8 Channels
LED Indicator	8 channels output LED indicator
Rated Current	Single channel output：Max. 1000mA Simultaneously output: Max.500mA
Leak Current	Max. value：3uA
Output Impedance	< 200mΩ
Output Delay	OFF to ON:Max.50us ON to OFF:Max.300us
Protection Function	Over temperature shutdown: typical 135℃ Overcurrent protection: typical value 3A Short-circuit protection: Supported

3 Hardware Interface

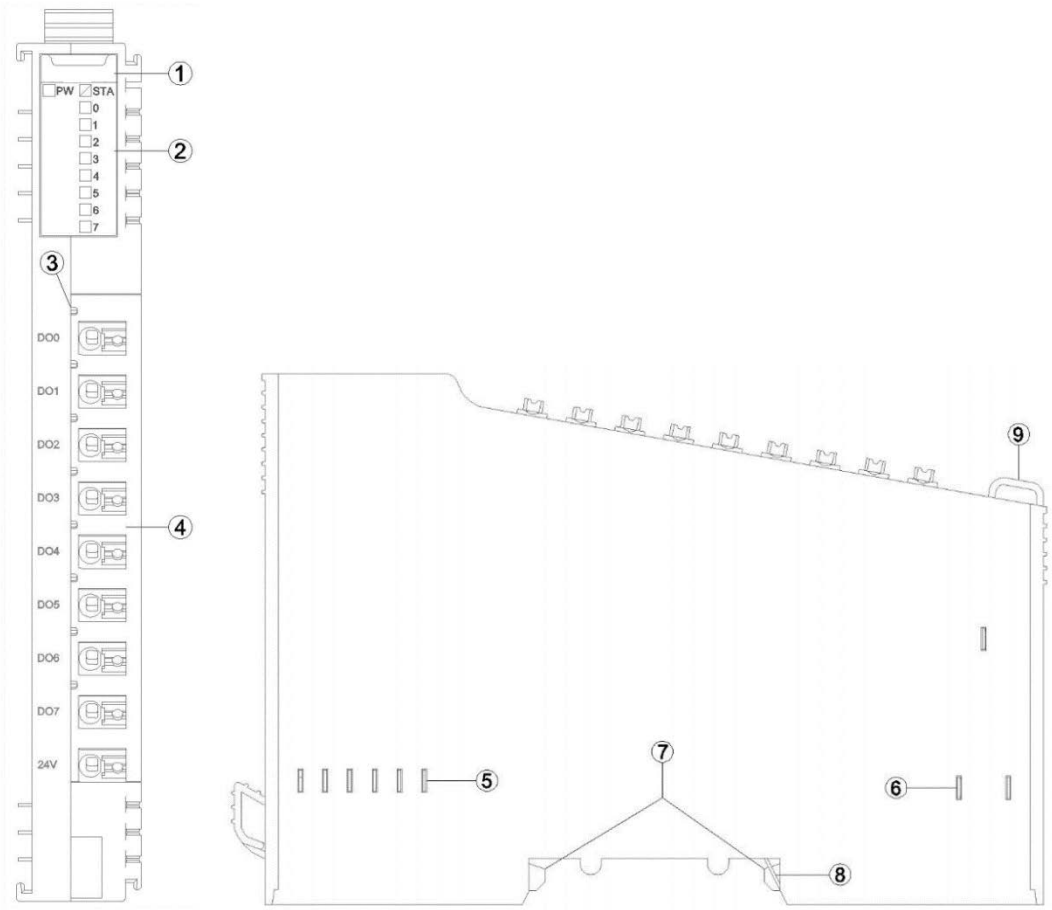

① Module Type

② State indicator

③ Channel indicator

④ Wiring Terminal and identification

⑤ Internal Bus

⑥ Field Power

⑦ Buckle

⑧ Grounding Spring Sheet

⑨ Fixed Wiring Harness

3.1 LED indicator definition

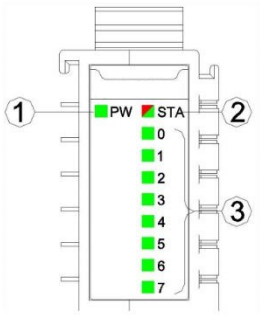

① Power LED indicator (green)

② Module state LED indicator (red/green)

③ Output channel LED indicator (green)

PW Power State (GREEN)	Definition
ON	Internal bus Power Normal
OFF	Internal bus Power Failure
STA Module State (RED/GREEN)	Definition
Green slow flash (2.5Hz)	Module internal bus is not started
Red slow flash (2.5Hz)	Module internal bus offline
ON (GREEN)	Operation normal
Flash(2.5Hz) (RED/GREEN)	Upgrading mode
Flash(10Hz) (RED/GREEN)	Firmware Update
Double Flash (RED)	Module Exception has been soft-restarted
0-7 channel LED indicator (GREEN)	Definition
ON	Output signal valid
OFF	Output signal invalid

3.2 Field channel LED indicator (Green)

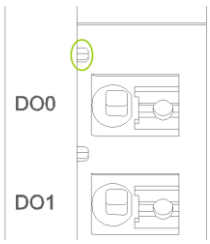

When the output signal of the output channel is valid, the corresponding field channel

LED indicator is lit.

3.3 Terminal definition

Terminal Number	Symbol	Description
1	DO0	Signal output
2	DO1	
3	DO2	
4	DO3	
5	DO4	
6	DO5	
7	DO6	
8	DO7	
9	24V	Power input *(Note1)*

Note: This power input port has two access methods depending on the load type.

It is recommended to use cables with cores greater than 0.2mm² and smaller than 1mm².

When connecting cables (terminals)with cores, need to check and connect them according to the corresponding node serial number.

The cold-pressed terminal parameters are as follows:

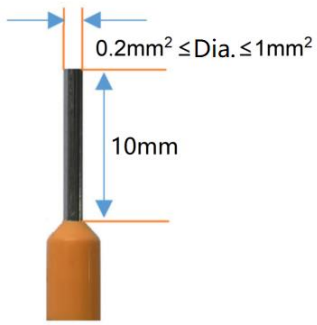

4 Wiring

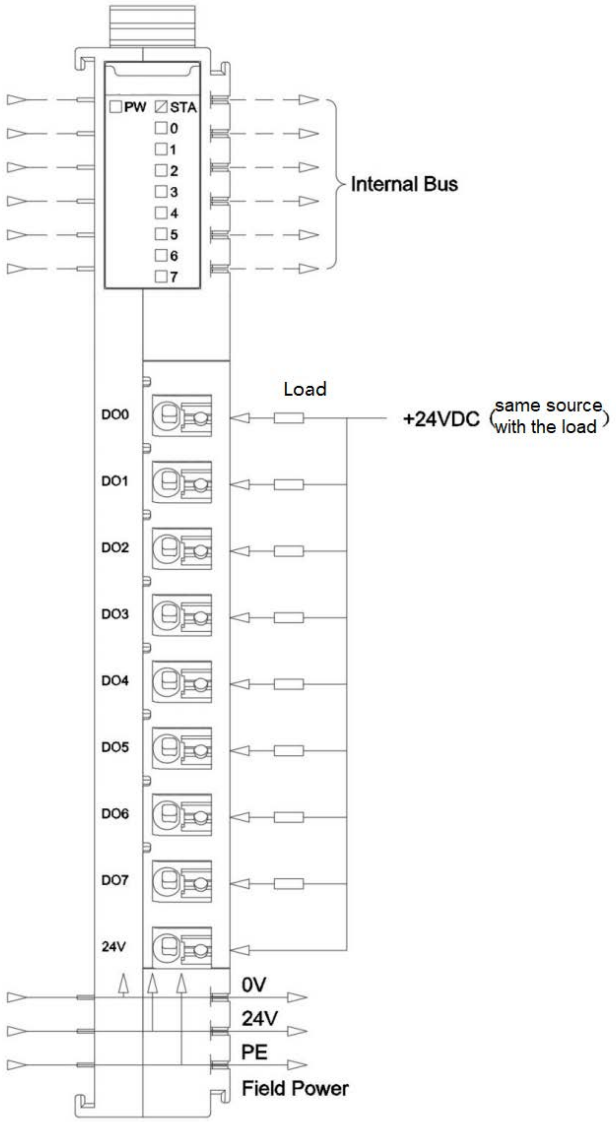

5 Process data definition

5.1 Module Process data

Output Data								
Bit No	Bit 7	Bit 6	Bit 5	Bit 4	Bit 3	Bit 2	Bit 1	Bit 0
Byte 0	DO Ch#7	DO Ch#6	DO Ch#5	DO Ch#4	DO Ch#3	DO Ch#2	DO Ch#1	DO Ch#0

Data description：

DO Ch#(0-7)： When the bit is 1, the output signal of the corresponding channel is effective, the output is low level, and the output is invalid when it is 0.

0: The output signal is invalid

1: The output signal is valid

5.2 Sub-Module Process data

Input Data								
Bit No	Bit 7	Bit 6	Bit 5	Bit 4	Bit 3	Bit 2	Bit 1	Bit 0
Byte 0	Alarm (CH 7)	Alarm Ch#6	Alarm Ch#5	Alarm Ch#4	Alarm Ch#3	Alarm Ch#2	Alarm Ch#1	Alarm Ch#0

Alarm (CH 0-7): When the bit is 1, the corresponding channel is working abnormally, when it is 0, the channel is working normally.

0: The channel is working normally

1: The channel is working abnormally

6 Configuration parameters definition

6.1 Module Configuration Parameters

Configured Parameter								
Bit No	Bit 7	Bit 6	Bit 5	Bit 4	Bit 3	Bit 2	Bit 1	Bit 0
Byte 0	Fault Action for Output Ch#7	Fault Action for Output Ch#6	Fault Action for Output Ch#5	Fault Action for Output Ch#4	Fault Action for Output Ch#3	Fault Action for Output Ch#2	Fault Action for Output Ch#1	Fault Action for Output Ch#0
Byte 1	Fault Value for Output Ch#7	Fault Value for Output Ch#6	Fault Value for Output Ch#5	Fault Value for Output Ch#4	Fault Value for Output Ch#3	Fault Value for Output Ch#2	Fault Value for Output Ch#1	Fault Value for Output Ch#0

Data description:

Fault Action for Output Ch#(0-7): When IO module detects the internal bus communication is abnormal and enters offline mode, and output data will be processed in this mode. (Default: 0)

0：Hold Last Output State

1：Output Fault Value

Fault Value for Output Ch#(0-7): When the fault output mode is 1, this bit sets the fault output value, and when the internal bus of IO module is offline, this setting value will be output. (Default: 0)

0: Output low level.

1: Output high level.

6.2 Sub-Module Configuration Parameters

Configure Parameter								
Bit No	Bit 7	Bit 6	Bit 5	Bit 4	Bit 3	Bit 2	Bit 1	Bit 0
Byte 0	Handle Mode (CH 7)	Handle Mode (CH 6)	Handle Mode (CH 5)	Handle Mode (CH 4)	Handle Mode (CH 3)	Handle Mode (CH 2)	Handle Mode (CH 1)	Handle Mode (CH 0)
Byte 1	Output Turn off Time(s)							
Byte 2	Reserved							

Handle Mode (CH 0-7): When the channel is detected to be abnormal condition (short circuit or overcurrent), the channel will immediately shut off.

Output Turn off Time(s): When the channel is detected to be abnormal condition (short circuit or overcurrent), the time for the channel to be turned off can be set 16-bit unsigned data, the range is “1-255”, (Default: 2s).

A Dimension drawing

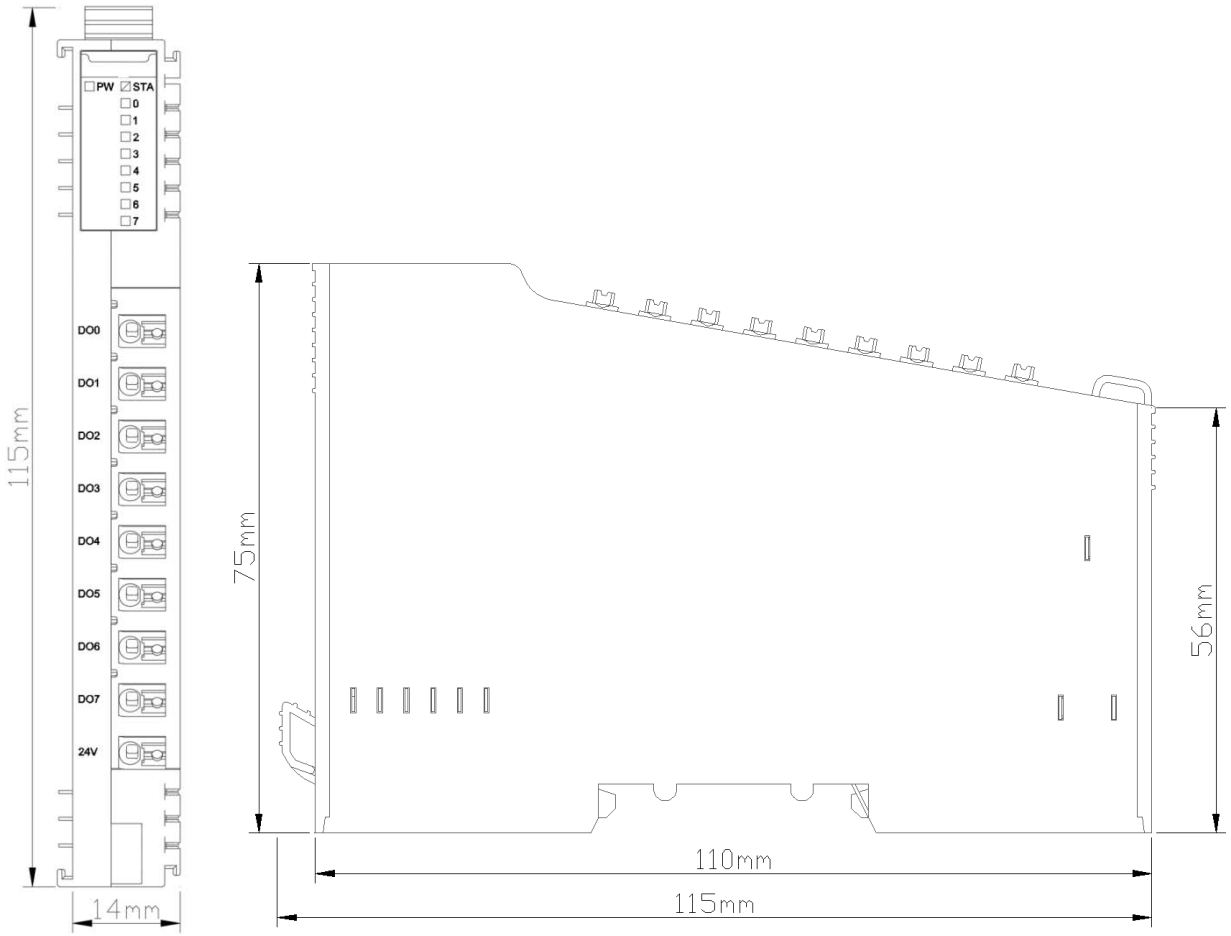

NT-2228 8 channels digital output/24VDC/ PNP

1 Module features

◆the module supports 8-channel digital output, the output voltage is 24VDC and the output high level is valid.

◆the module could drive field equipment (relay, solenoid valve, etc.)

◆the module internal bus and field output are isolated by optocoupler

◆the module carries with 8 digital output channel LED indicator

◆the module has the functions of thermal shutdown and overcurrent protection

◆the module supports short circuit protection and overload protection

2 Technical Parameters

General parameters	
Power Consumption	Max.80mA@5.0Vdc
Isolation	I/O to internal bus: opto-couple isolation (3KVrms)
Field Power	Nominal:24Vdc, Range:22-28Vd
Wiring	Max.1.0mm² (AWG 17)
Mounting Type	35mm DIN-Rail
Size	115*14*75mm
Weight	65g
Environment Specification	
Operational Temperature	-40~85℃
Operational Humidity	5%~95% RH(No Condensation)
Ingress Protection Rating	IP20
Output parameters	
Channel Number	8 Channels
LED Indicator	8 Channels output LED Indicator
Rated Current	Typical value：500mA
Leak Current	Max. value：100uA
Output Impedance	<280mΩ
Output Delay	OFF to ON:Max.100us ON to OFF:Max.150us
Protection Function	Over temperature turn-off: typical 135℃ Overcurrent protection: typical value 1.1A

3 Hardware Interface

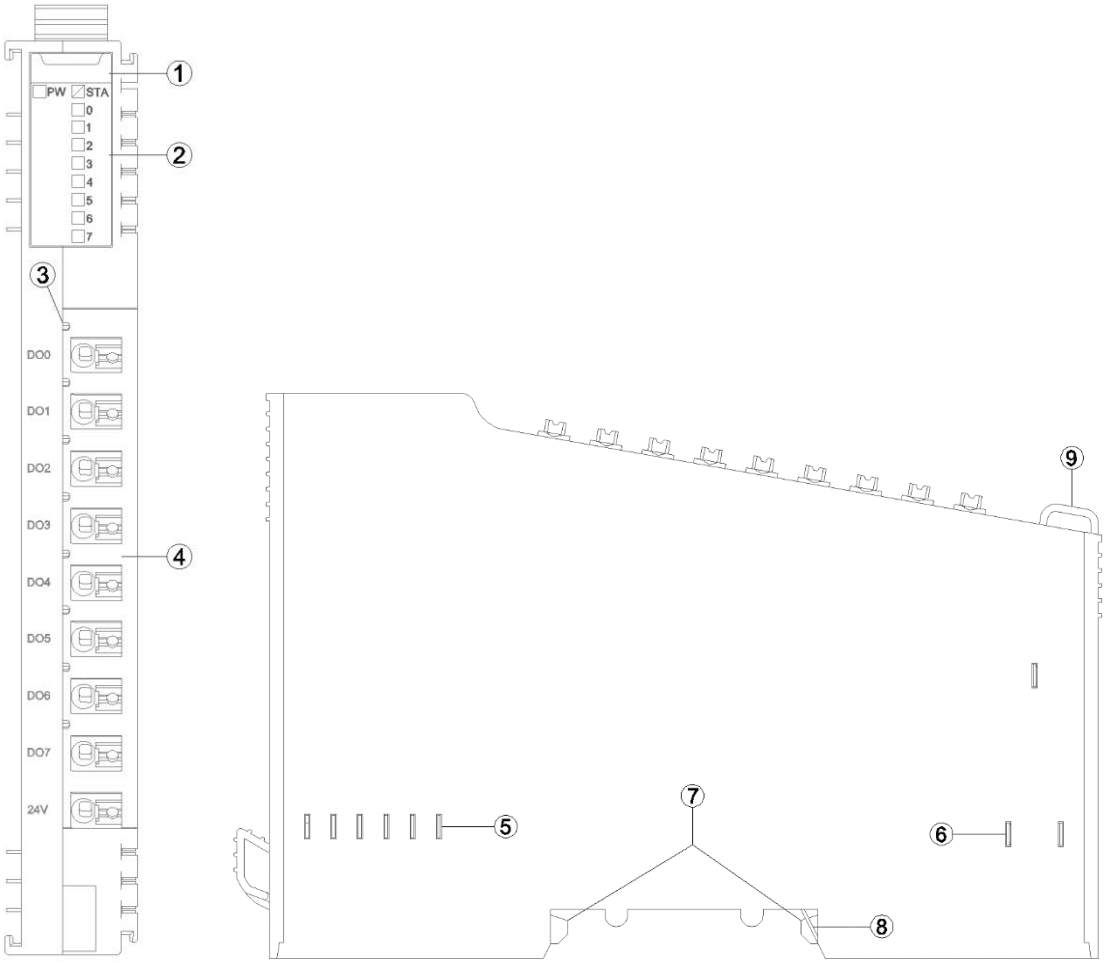

① Module Type

② State indicator

③ Channel indicator

④ Wiring Terminal and identification

⑤ Internal Bus

⑥ Field Power

⑦ Buckle

⑧ Grounding Spring Sheet

⑨ Fixed Wiring Harness

3.1 LED indicator definition

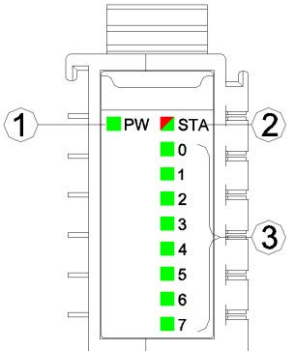

① Power LED indicator (green)

② Module State LED indicator (red/green)

③ Output channel LED indicator (green)

PW Power State (GREEN)	Definition
ON	Internal bus Power Normal
OFF	Internal bus Power Failure
STA Module State (RED/GREEN)	Definition
Green slow flash (2.5Hz)	Module internal bus is not started
Red slow flash (2.5Hz)	Module internal bus offline
ON (GREEN)	Operation normal
Flash(2.5Hz) (RED/GREEN)	Upgrading mode
Flash(10Hz) (RED/GREEN)	Firmware Update
Double Flash (RED)	Module Exception has been soft-restarted
0-7 channel LED indicator (GREEN)	Definition
ON	Output signal valid
OFF	Output signal invalid

3.2 Field channel LED indicator (Green)

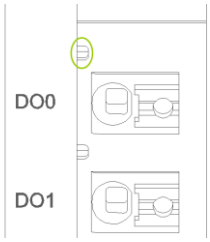

When the output signal of the output channel is valid, the corresponding field channel LED indicator is lit.

3.3 Terminal definition

Terminal Number	Symbol	Description
1	DO0	Signal output
2	DO1	
3	DO2	
4	DO3	
5	DO4	
6	DO5	
7	DO6	
8	DO7	
9	24V	Power intput *(Note1)*

Note 1: When the red LED indicator beside the 24V terminals lights up, this is indicating that the module output has passed the field bus, so the 24V terminals could be disconnected. The max. output current of each channel is 500mA, and the max. sum of the current of all the output channels is 4A. When the total current exceeds 2A, and it is suggested to connect the power in the 24V terminal at the same time to avoid the on-site power current exceeding its limit.

When the red LED indicator beside the 24V terminal goes off, it means that the module output is not powered. In this case, the power supply needs to be connected in the 24V terminal. At this point, the max. output current of each channel is 500mA, and the sum of all output channel currents is 4A.

It is recommended to use cables with cores smaller than 1mm².

The cold-pressed terminal parameters are as follows:

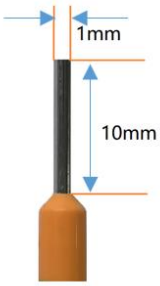

4 Wiring

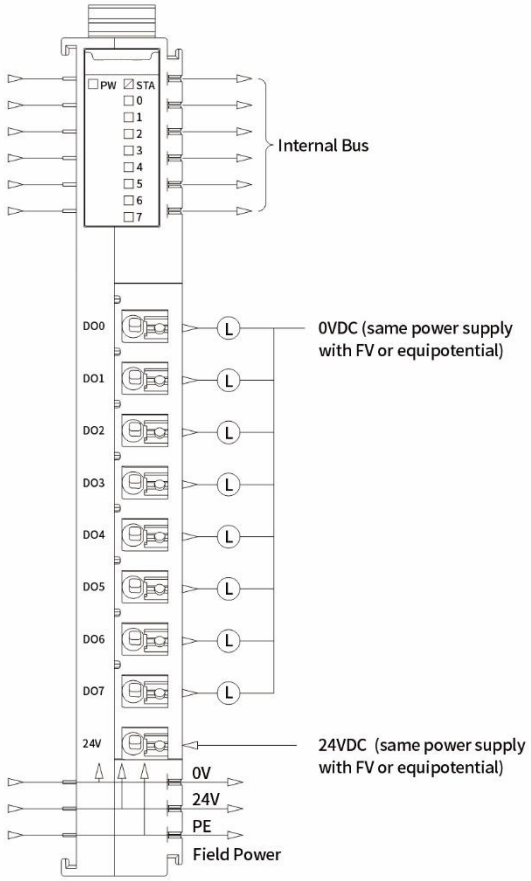

5 Process data definition

Output Data								
Bit No	Bit 7	Bit 6	Bit 5	Bit 4	Bit 3	Bit 2	Bit 1	Bit 0
Byte 0	DO Ch#7	DO Ch#6	DO Ch#5	DO Ch#4	DO Ch#3	DO Ch#2	DO Ch#1	DO Ch#0

Data description：

DO Ch#(0-7)： When the bit is 1, the output signal of the corresponding channel is effective, the output is high level, and the output is invalid when it is 0.

0: The output signal is invalid

1: The output signal is valid

6 Configuration parameters definition

Configured Parameter								
Bit No	Bit 7	Bit 6	Bit 5	Bit 4	Bit 3	Bit 2	Bit 1	Bit 0
Byte 0	Fault Action for Output Ch#7	Fault Action for Output Ch#6	Fault Action for Output Ch#5	Fault Action for Output Ch#4	Fault Action for Output Ch#3	Fault Action for Output Ch#2	Fault Action for Output Ch#1	Fault Action for Output Ch#0
Byte 1	Fault Value for Output Ch#7	Fault Value for Output Ch#6	Fault Value for Output Ch#5	Fault Value for Output Ch#4	Fault Value for Output Ch#3	Fault Value for Output Ch#2	Fault Value for Output Ch#1	Fault Value for Output Ch#0

Data description:

Fault Action for Output Ch#(0-7)： When IO module detects the internal bus communication is abnormal and enters offline mode, and output data will be processed in this mode. (Default: 0)

0：Hold Last Output State

1：Output Fault Value

Fault Value for Output Ch#(0-7)： When the fault output mode is 1, this bit sets the fault output value, and when the internal bus of IO module is offline, this setting value will be output. (Default: 0)

0: Output low level.

1: Output high level.

A Dimension drawing

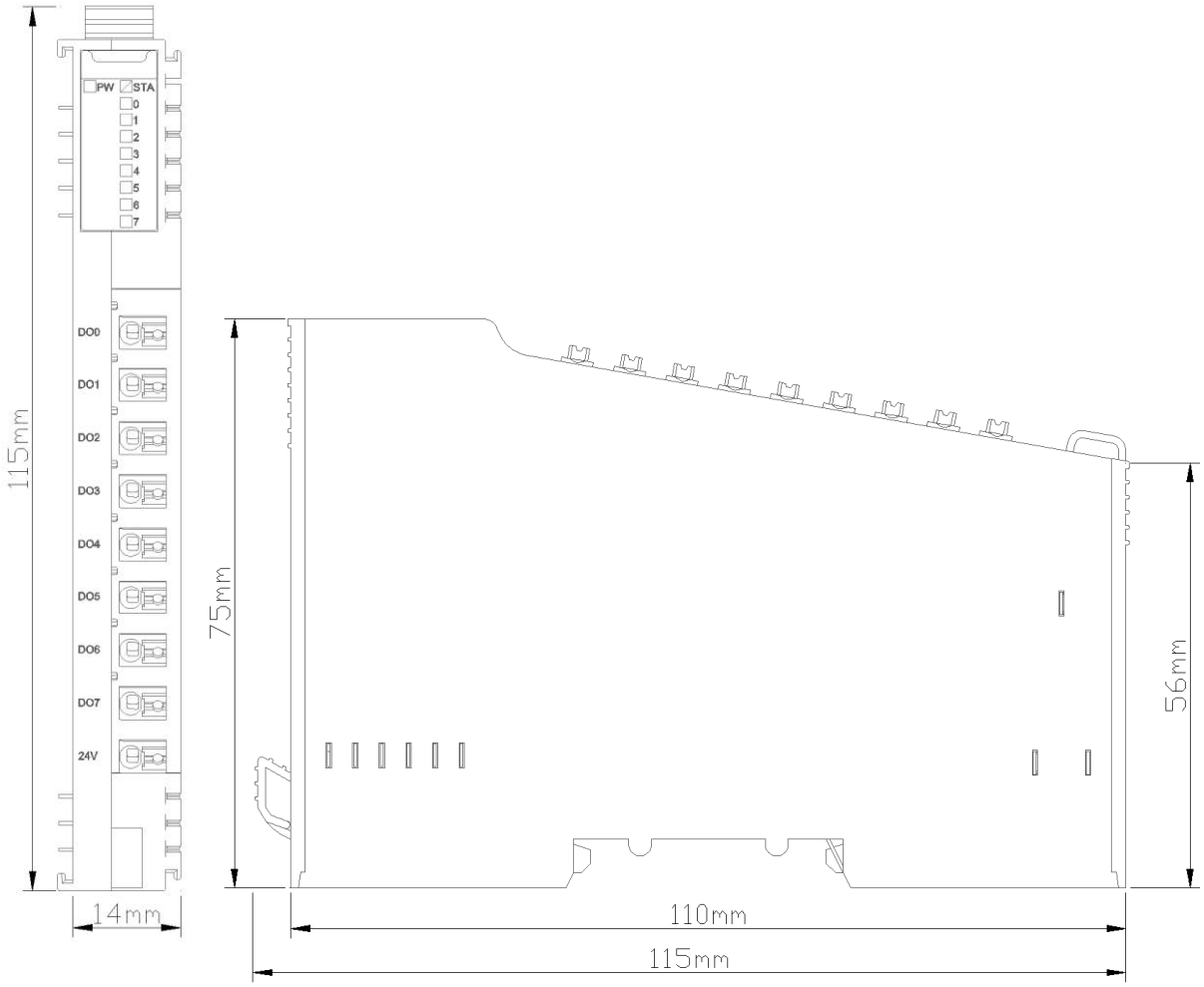

NT-222F 16 channels digital output/24VDC/PNP

1 Module features

◆ the module supports 16 channels digital output, the output voltage is 24VDC and the output high level is valid.

◆ module can drive field equipment. (relay, solenoid valve, etc.)

◆ the internal bus of the module and field output are using opto-coupler.

◆ the module carries 16 digital output channel LED indicator light.

◆ the module has the functions of thermal shutdown and overcurrent protection.

◆ the module supports short circuit protection and overload protection.

2 Technical parameters

General Parameters	
Power	Max.175mA@5.0Vdc
Isolation	I/O to internal bus: opto-couple isolation (3KVrms)
Field Power	Nominal:24Vdc, Range:22-28Vdc
Wiring	Max.1.0mm² (AWG 17)
Mounting Type	35mm DIN-Rail
Size	115*14*75mm
Weight	65g
Environment Specification	
Operational Temperature	-40~85℃
Operational Humidity	5%-95% (No Condensation)
Ingress Protection Rating	IP20
Output Parameters	
Channel Number	16 channel source type output
LED Indicator	16 channel output LED indicator
Rated Current	Typical value: 500mA
Leakage Current	Max：10uA
Output Impedance	<200mΩ
Output Delay	OFF to ON: Max.100us ON to OFF: Max.150us
Protection	Overtemperature shutdown: typical value is 135℃ Overcurrent protection: typical value 1.1A Short circuit protection support

3 Hardware interfaces

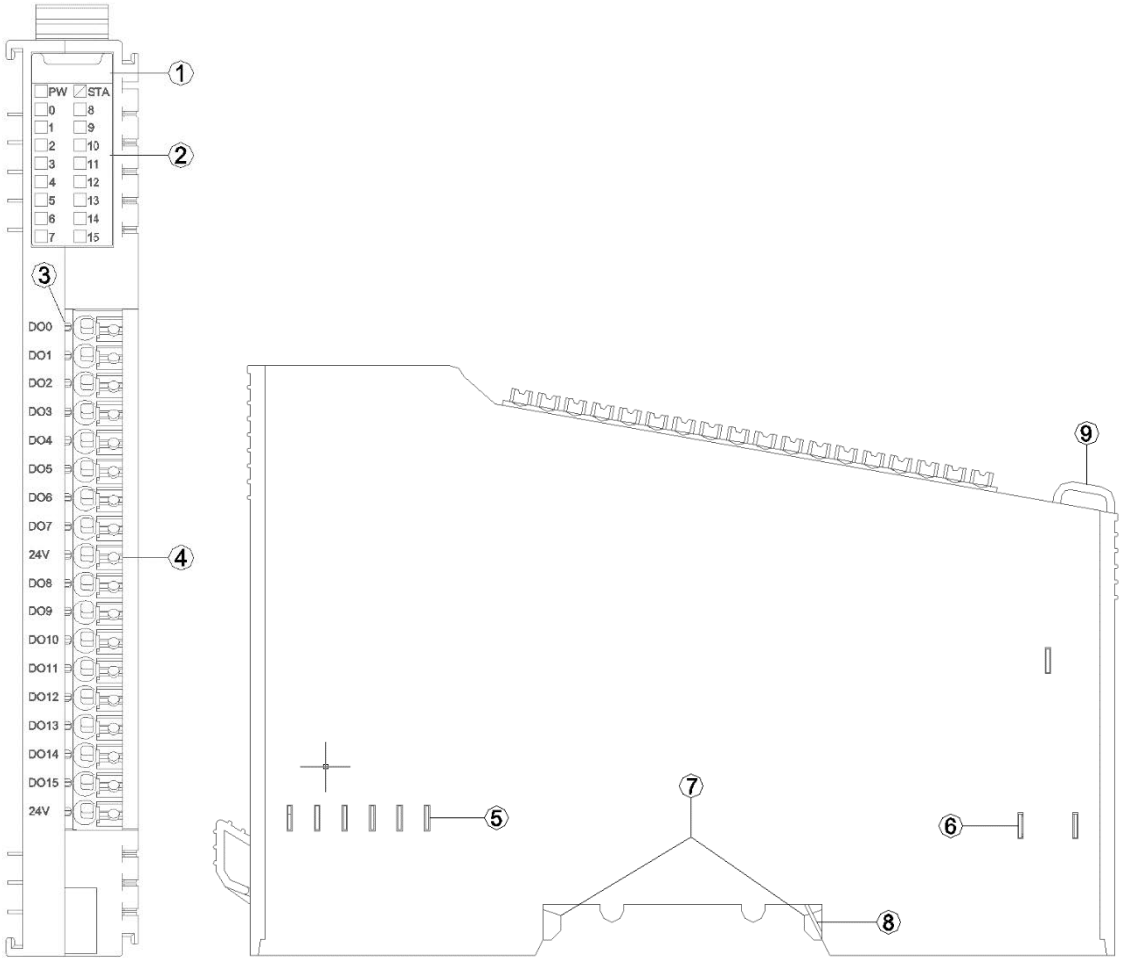

① Module Type

② State indicator

③ Channel indicator

④ Wiring Terminal and identification

⑤ Internal Bus

⑥ Field Power

⑦ Buckle

⑧ Grounding Spring Sheet

⑨ Fixed Wiring Harness

3.1 LED indicator definition

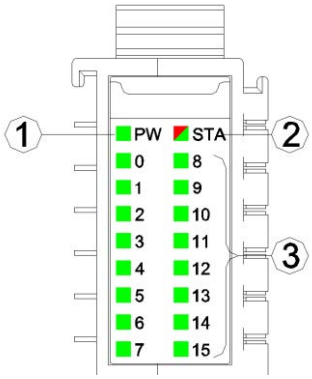

① Power LED indicator (green)

② Module State indicator LED (red/green)

③ Output channel indicator LED (green)

PW Power State	Definition
ON	Internal bus power supply normal
OFF	Internal bus power supply failure
STA Module State (RED/GREEN)	Definition
Green slow flash (2.5 Hz)	Module internal bus is not started
Red slow flash (2.5 Hz)	Module internal bus offline
ON (GREEN)	Operation normal
Flash (2.5 Hz) (RED/GREEN)	updating mode
Flash (10 Hz) (RED/GREEN)	firmware update
Double Flash (RED)	Module exception has been soft-restarted
0-15 channel indicator LED	Definition
ON	Output signal valid
OFF	Output signal invalid

3.2 Field channel LED indicator (Green)

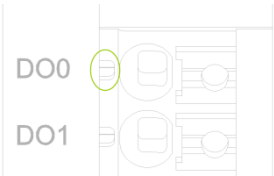

When output signal of output channel is valid, the corresponding field channel LED indicator is on.

3.3 Terminal definition

Terminal Number	Symbol	The Description
1	DO0	Signal output
2	DO1	
3	DO2	
4	DO3	
5	DO4	
6	DO5	
7	DO6	
8	DO7	
9	24V	Power input *(note1)*
10	DO8	Signal output
11	DO9	
12	DO10	
13	DO11	
14	DO12	
15	DO13	
16	DO14	
17	DO15	
18	24V	Power input*(note1)*

Note 1: when the red LED indicator beside the 24V wiring terminal is on, it indicates that the fieldbus is powered on, then the maximum output current of each channel is 500mA, and the maximum sum of all output channel currents is 4A.

When the 24VDC power is supplied to the 24V wiring terminal separately, the maximum sum of all the output channel currents is 8A (Regardless of whether the fieldbus is powered or not, 24V wiring terminals can be connected to 24VDC power supply).

It is recommended to use cables with cores smaller than 1mm².

The cold-pressed terminal parameters are as follows:

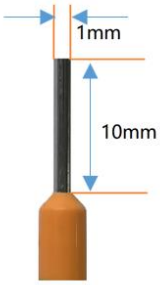

4 Wiring

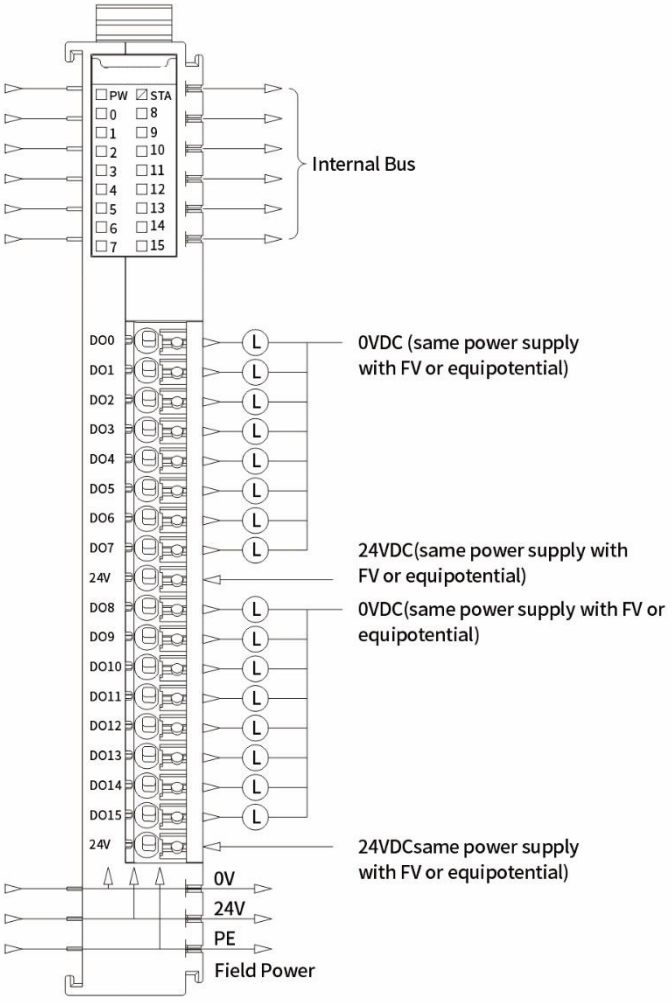
PW
STA
0
1
2
3
4
5
6
7
8
9
10
11
12
13
14
15
Internal Bus
DO0
DO1
DO2
DO3
DO4
DO5
DO6
DO7
24V
DO8
DO9
DO10
DO11
DO12
DO13
DO14
DO15
24V
L
0VDC (same power supply with FV or equipotential)
24VDC(same power supply with FV or equipotential)
0VDC(same power supply with FV or equipotential)
24VDCsame power supply with FV or equipotential)
0V
24V
PE
Field Power

5 Process data definition

Output data								
Bit No	Bit 7	Bit 6	Bit 5	Bit 4	Bit 3	Bit 2	Bit 1	Bit 0
Byte 0	DO Ch#7	DO Ch#6	DO Ch#5	DO Ch#4	DO Ch#3	DO Ch#2	DO Ch#1	DO Ch#0
Byte 1	DO Ch#15	DO Ch#14	DO Ch#13	DO Ch#12	DO Ch#11	DO Ch#10	DO Ch#9	DO Ch#8

Data description:

DO Ch#(0-15): when this bit is 1, the corresponding channel output signal is valid, the output is high level, and the output is invalid when it is 0.

0：Output signal is invalid

1：Output signal is valid

6 Configuration parameter definitions

Configuration parameters								
Bit No	Bit 7	Bit 6	Bit 5	Bit 4	Bit 3	Bit 2	Bit 1	Bit 0
Byte 0	Fault Action for Output Ch#7	Fault Action for Output Ch#6	Fault Action for Output Ch#5	Fault Action for Output Ch#4	Fault Action for Output Ch#3	Fault Action for Output Ch#2	Fault Action for Output Ch#1	Fault Action for Output Ch#0
Byte 1	Fault Action for Output Ch#15	Fault Action for Output Ch#14	Fault Action for Output Ch#13	Fault Action for Output Ch#12	Fault Action for Output Ch#11	Fault Action for Output Ch#10	Fault Action for Output Ch#9	Fault Action for Output Ch#8
Byte 2	Fault Value for Output Ch#7	Fault Value for Output Ch#6	Fault Value for Output Ch#5	Fault Value for Output Ch#4	Fault Value for Output Ch#3	Fault Value for Output Ch#2	Fault Value for Output Ch#1	Fault Value for Output Ch#0
Byte 3	Fault Value for Output Ch#15	Fault Value for Output Ch#14	Fault Value for Output Ch#13	Fault Value for Output Ch#12	Fault Value for Output Ch#11	Fault Value for Output Ch#10	Fault Value for Output Ch#9	Fault Value for Output Ch#8

Data description:

Fault Action for Output Ch#(0-15): Fault Output mode. When the IO module detects an internal bus exception and fails to communicate with the adapter. And the module will turn to offline mode, so the output data is processed in this way. (Default: 0)

0: keep the last time output State.

1: output fault value.

Fault Value for Output Ch#(0-15): when the Fault Output mode is 1, this bit sets the Fault Output Value, and this setting value will be outputted when the interal bus of IO module is offline. (default: 0)

0: Output low level.

1: Output high level.

A Dimension drawing

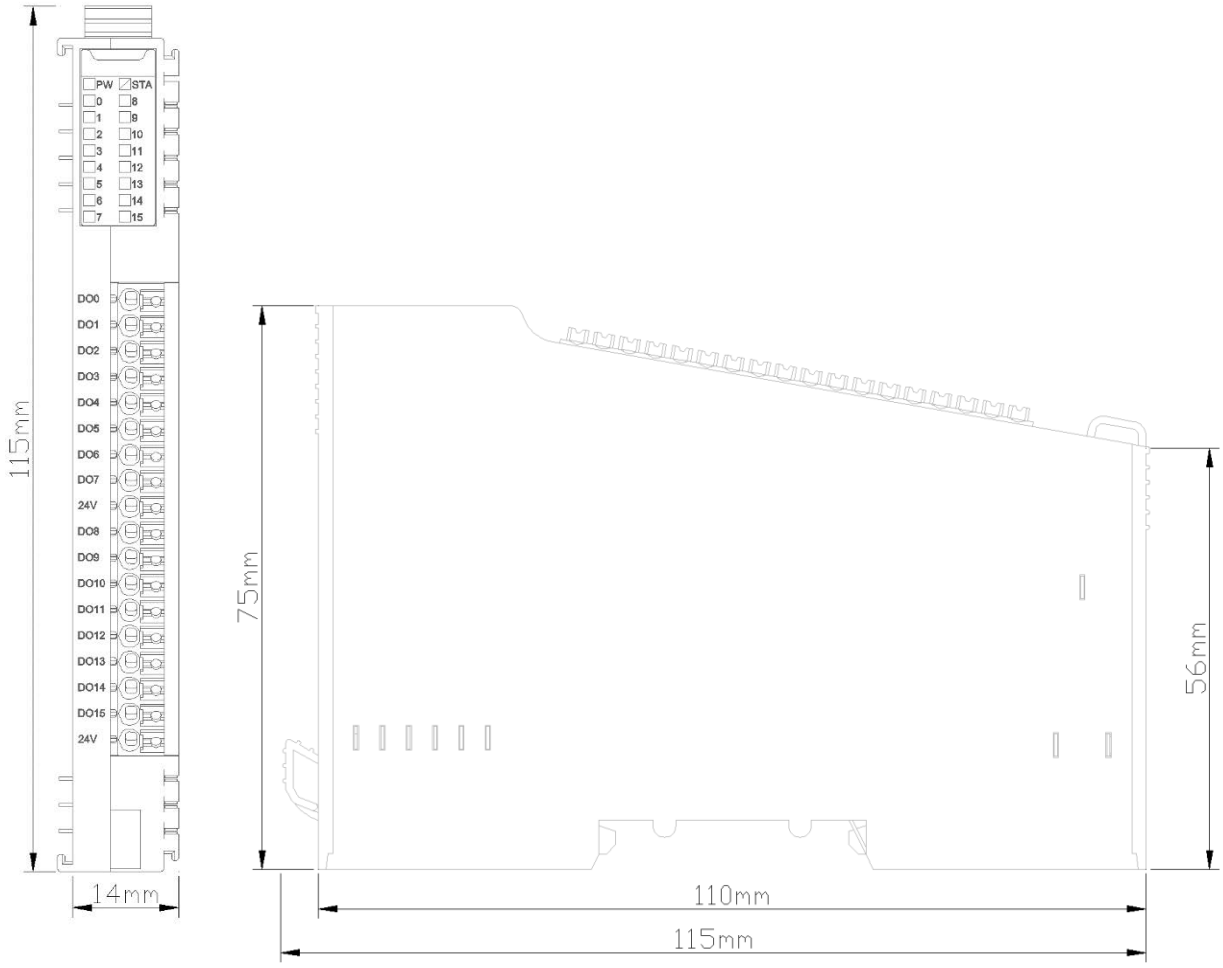

NT-222H 32 channels digital output/24VDC/PNP

1 Module features

◆ the module supports 32 channels digital output; the output voltage is 24VDC and the output high level is valid.

◆ module can drive field equipment. (relay, solenoid valve, etc.)

◆ the internal bus of the module and field output are using opto-coupler.

◆ the module carries 32 digital output channel LED indicator light.

◆ the module has the functions of thermal shutdown and overcurrent protection.

◆ the module supports short circuit protection and overload protection.

2 Technical parameters

General Parameters	
Power	Max.175mA@5.0Vdc
Isolation	I/O to internal bus: opto-couple isolation (3KVrms)
Field Power	Nominal:24Vdc, Range:22-28Vdc
Wiring	34P male connector 2.54mm Pin header
Mounting Type	35mm DIN-Rail
Size	115*14*75mm
Weight	65g
Environment Specification	
Operational Temperature	-40~85℃
Operational Humidity	5%-95% (No Condensation)
Ingress Protection Rating	IP20
Output Parameters	
Channel Number	32 channels source type output
LED Indicator	32 channel output LED indicator
Rated Current	Typical value：300mA
Leakage Current	Max：10uA
Output Impedance	<200mΩ
Output Delay	OFF to ON: Max.100us ON to OFF: Max.150us
Protection	Overtemperature shutdown: typical value is 135℃ Overcurrent protection: typical value 1.1A Short circuit protection support

3 Hardware interfaces

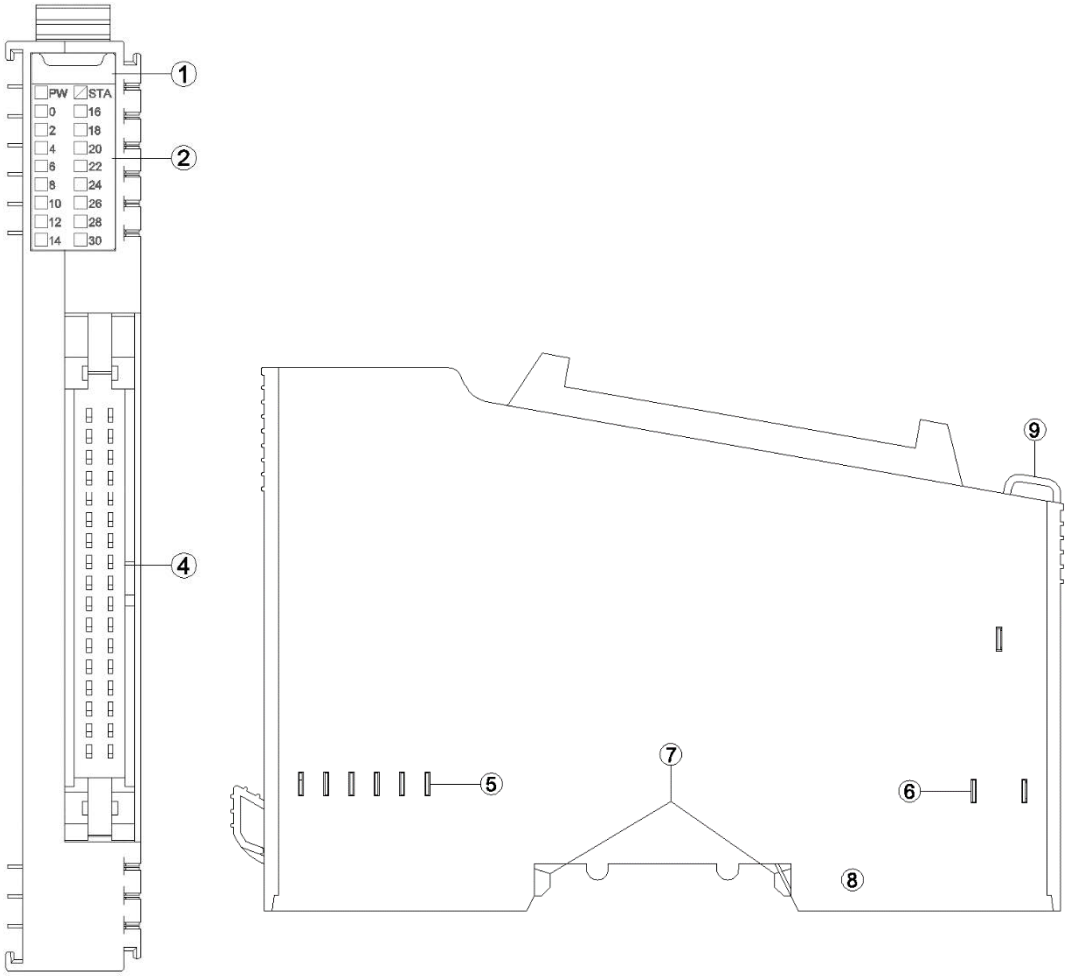

① Module Type

② State indicator

④ 34P male connector

⑤ Internal Bus

⑥ Field Power

⑦ Buckle

⑧ Grounding Spring Sheet

⑩ Fixed Wiring Harness

3.1 LED indicator definition

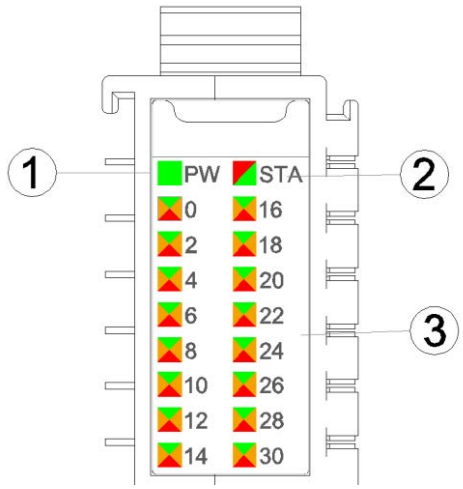

① Power LED indicator (green)

② Module State LED indicator (red/green)

③ Output channel LED indicator (green/red/orange)

PW Power State	Definition
ON	Internal bus power supply normal
OFF	Internal bus power supply failure
STA Module State	Definition
Green slow flash (2.5 Hz)	Module internal bus is not started
Red slow flash (2.5 Hz)	Module internal bus offline
ON (GREEN)	Operation normal
Flash (2.5 Hz) (RED/GREEN)	updating mode
Flash (10 Hz) (RED/GREEN)	firmware update
Double Flash (RED)	Module exception has been soft-restarted
0-31 channel indicator LED	Definition
ON (GREEN)	Indicates that the output channel signal is valid
ON (RED)	Indicates that the output channel +1 signal is valid
ON (ORANGE)	Indicates that the output channel and channel +1 signal are valid
OFF	Output signal is invalid

3.2 Terminal definition

Description	Symbol	Terminal Number	Terminal Number	Symbol	Description
Signal Output	DO0	1	18	DO16	Signal Output
	DO1	2	19	DO17	
	DO2	3	20	DO18	
	DO3	4	21	DO19	
	DO4	5	22	DO20	
	DO5	6	23	DO21	
	DO6	7	24	DO22	
	DO7	8	25	DO23	
	DO8	9	26	DO24	
	DO9	10	27	DO25	
	DO10	11	28	DO26	
	DO11	12	29	DO27	
	DO12	13	30	DO28	
	DO13	14	31	DO29	
	DO14	15	32	DO30	
	DO15	16	33	DO31	
24V	24V	17	34	24V	24V

Pins 17 and 34 are internally short-circuited.

4 Wiring

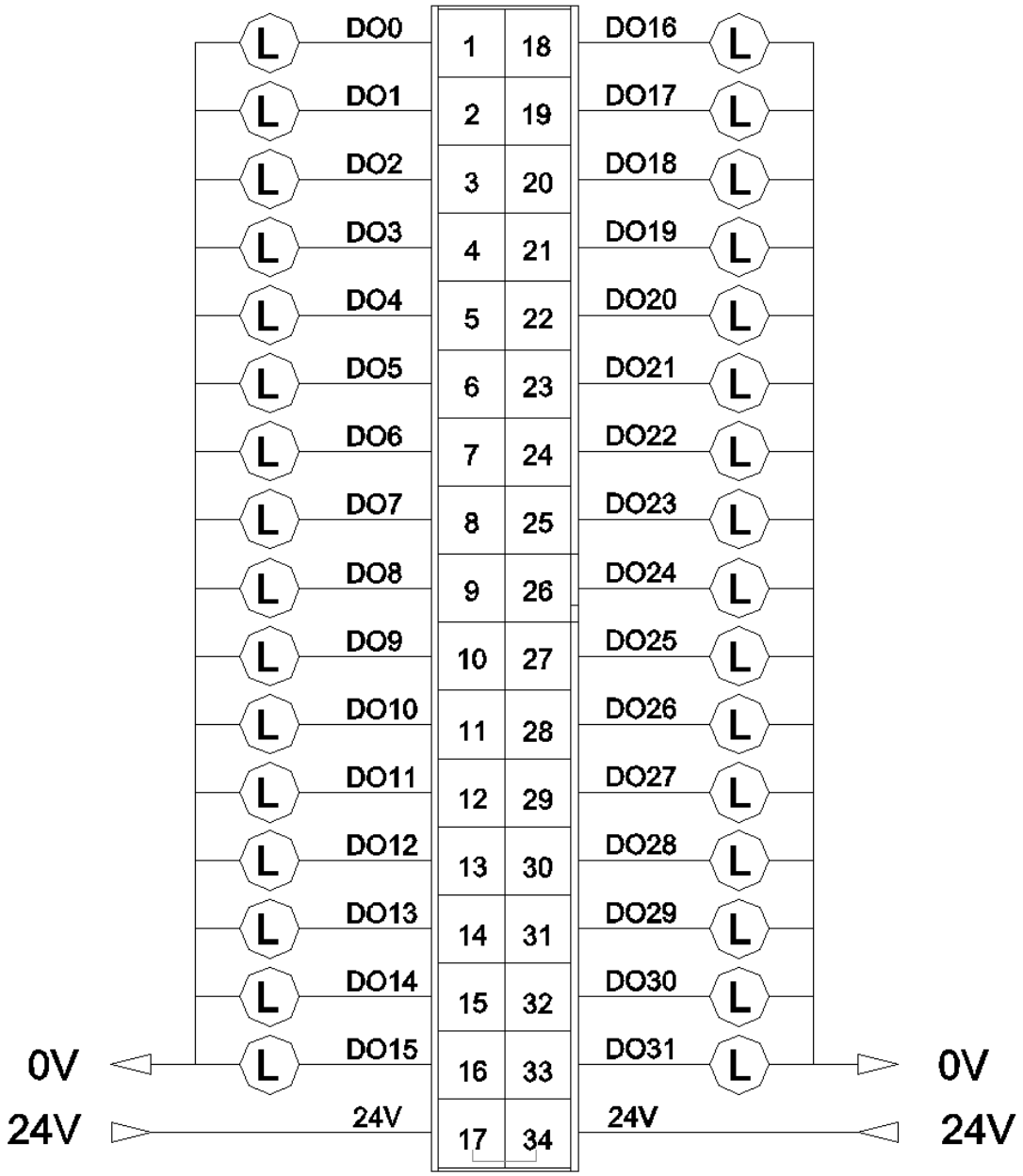

Terminals 17 and 34 are internally short-circuited

5 Process data definition

Output data								
Bit No	Bit 7	Bit 6	Bit 5	Bit 4	Bit 3	Bit 2	Bit 1	Bit 0
Byte 0	DO Ch#7	DO Ch#6	DO Ch#5	DO Ch#4	DO Ch#3	DO Ch#2	DO Ch#1	DO Ch#0
Byte 1	DO Ch#15	DO Ch#14	DO Ch#13	DO Ch#12	DO Ch#11	DO Ch#10	DO Ch#9	DO Ch#8
Byte 2	DO Ch#23	DO Ch#22	DO Ch#21	DO Ch#20	DO Ch#19	DO Ch#18	DO Ch#17	DO Ch#16
Byte 3	DO Ch#31	DO Ch#30	DO Ch#29	DO Ch#28	DO Ch#27	DO Ch#26	DO Ch#25	DO Ch#24

Data description:

DO Ch#(0-31): when this bit is 1, the corresponding channel output signal is valid, the output is high level, and the output is invalid when it is 0.

0：Output signal is invalid

1：Output signal is valid

6 Configuration parameter definitions

Configuration parameters								
Bit No	Bit 7	Bit 6	Bit 5	Bit 4	Bit 3	Bit 2	Bit 1	Bit 0
Byte 0	Fault Action for Output Ch#7	Fault Action for Output Ch#6	Fault Action for Output Ch#5	Fault Action for Output Ch#4	Fault Action for Output Ch#3	Fault Action for Output Ch#2	Fault Action for Output Ch#1	Fault Action for Output Ch#0
Byte 1	Fault Action for Output Ch#15	Fault Action for Output Ch#14	Fault Action for Output Ch#13	Fault Action for Output Ch#12	Fault Action for Output Ch#11	Fault Action for Output Ch#10	Fault Action for Output Ch#9	Fault Action for Output Ch#8
Byte 2	Fault Action for Output Ch#23	Fault Action for Output Ch#22	Fault Action for Output Ch#21	Fault Action for Output Ch#20	Fault Action for Output Ch#19	Fault Action for Output Ch#18	Fault Action for Output Ch#17	Fault Action for Output Ch#16
Byte 3	Fault Action for Output Ch#31	Fault Action for Output Ch#30	Fault Action for Output Ch#29	Fault Action for Output Ch#28	Fault Action for Output Ch#27	Fault Action for Output Ch#26	Fault Action for Output Ch#25	Fault Action for Output Ch#24

Byte 4	Fault Value for Output Ch#7	Fault Value for Output Ch#6	Fault Value for Output Ch#5	Fault Value for Output Ch#4	Fault Value for Output Ch#3	Fault Value for Output Ch#2	Fault Value for Output Ch#1	Fault Value for Output Ch#0
Byte 5	Fault Value for Output Ch#15	Fault Value for Output Ch#14	Fault Value for Output Ch#13	Fault Value for Output Ch#12	Fault Value for Output Ch#11	Fault Value for Output Ch#10	Fault Value for Output Ch#9	Fault Value for Output Ch#8
Byte 6	Fault Value for Output Ch#23	Fault Value for Output Ch#22	Fault Value for Output Ch#21	Fault Value for Output Ch#20	Fault Value for Output Ch#19	Fault Value for Output Ch#18	Fault Value for Output Ch#17	Fault Value for Output Ch#16
Byte 7	Fault Value for Output Ch#31	Fault Value for Output Ch#30	Fault Value for Output Ch#29	Fault Value for Output Ch#28	Fault Value for Output Ch#27	Fault Value for Output Ch#26	Fault Value for Output Ch#25	Fault Value for Output Ch#24

Data description:

Fault Action for Output Ch#(0-31): Fault Output mode. When the IO module detects an internal bus exception and fails to communicate with the adapter. And the module will turn to offline mode, so the output data is processed in this way. (default: 0)

0: keep the last time output State.

1: output fault value.

Fault Value for Output Ch#(0-31): when the Fault Output mode is 1, this bit sets the Fault Output Value, and this setting value will be outputted when the interal bus of IO module is offline. (default: 0)

0: Output low level.

1: Output high level.

A Dimension drawing

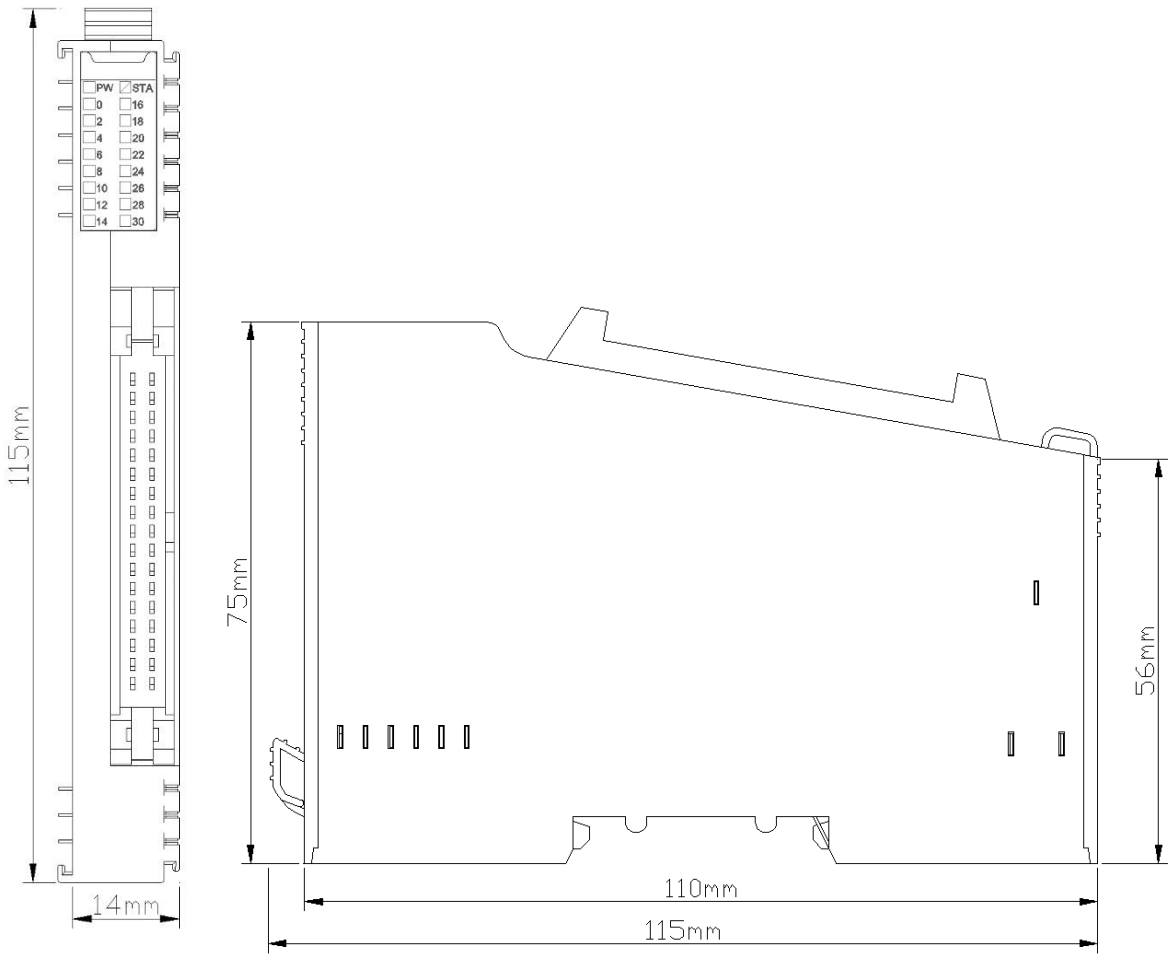

CT-221F 16 channels digital output/24VDC/NPN

1 Module features

◆ the module supports 16 channels digital output, the output voltage is 0V and the output low level is valid.

◆ the module can drive field equipment (relay, solenoid valve, etc.)

◆ the internal bus and field output of the module both adopt electromagnetic isolation

◆ the module carries 16 digital output channel LED indicator

◆ the module has the function of thermal shutdown and over current protection

2 Technical parameters

General Parameters	
Power	Max.140mA@5.0Vdc
Isolation	I/O to internal bus: opto-couple isolation (3KVrms)
Field Power	Nominal:24Vdc, Range:22-28Vdc
VCLAMP Voltage	Nominal:24Vdc, Input range:12-36Vdc
Wiring	I/O wiring：Max.1.0mm² (AWG 17)
Mounting Type	35mm DIN-Rail
Size	115*14*75mm
Weight	65g
Environment Specification	
Operational Temperature	-40~85℃
Operational Humidity	5%-95% (No Condensation)
Ingress Protection Rating	IP20
Output Parameters	
Channel Number	16 channel sink type output
LED Indicator	16 channel output LED indicator
Rated Current	single channel output：Max.1000mA simultaneously output：Max.500mA
Leakage Current	Max. 10uA
On Resistance	Typical value：500mΩ
Output Delay	OFF to ON: Max.100us ON to OFF: Max.150us
Protection Function	Over-temperature shut down: typical value 160℃ Overcurrent protection: typical value 1.8A Short circuit protection: supported

3 Hardware interfaces

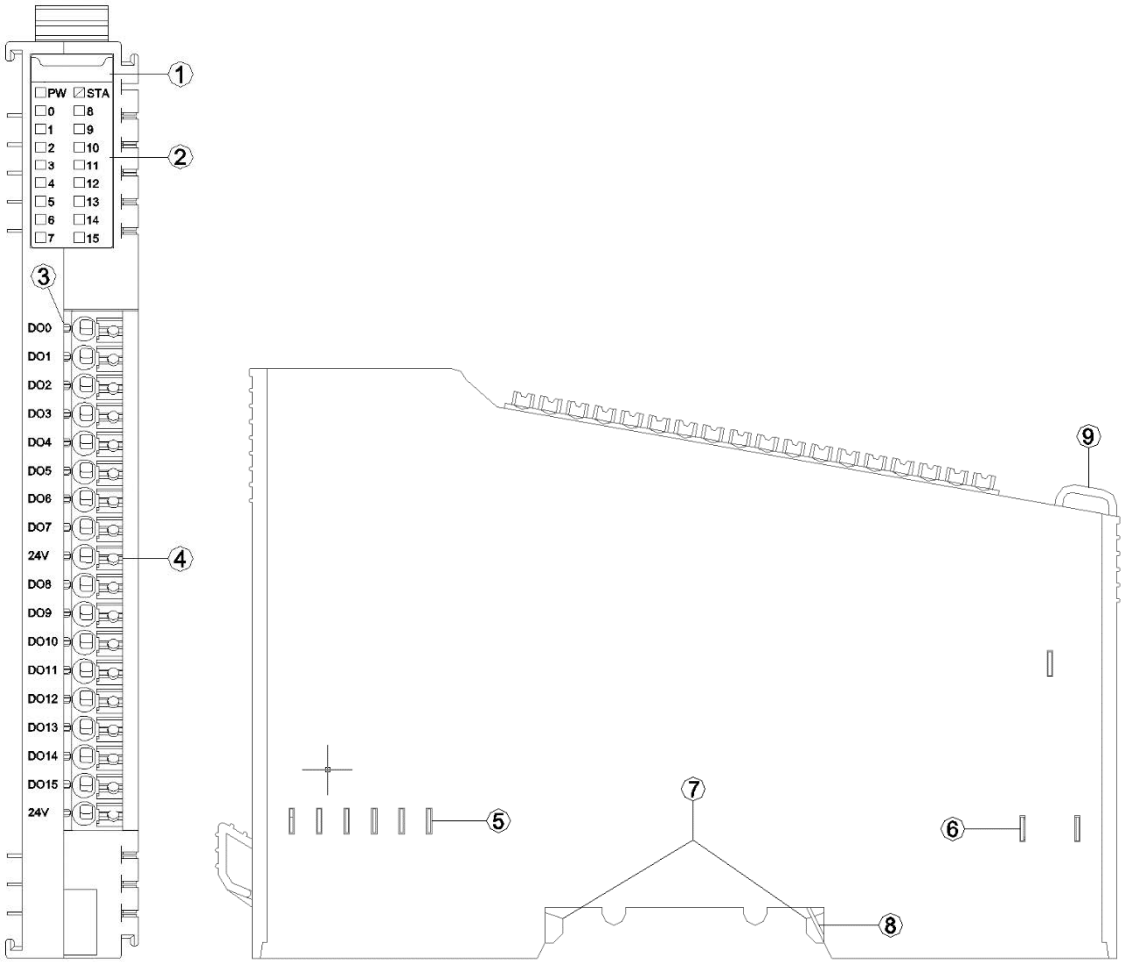

① Module Type

② State indicator

③ Channel indicator

④ Wiring Terminal and identification

⑤ Internal Bus

⑥ Field Power

⑦ Buckle

⑧ Grounding Spring Sheet

⑨ Fixed Wiring Harness

3.1 LED indicator definition

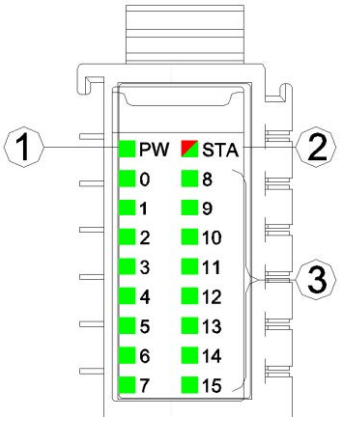

① Power LED indicator (green)

② Module State indicator LED (red/green)

③ Output channel indicator LED (green)

PW Power State	Definition
ON	Internal bus power supply normal
OFF	Internal bus power supply failure
STA Module State (RED/GREEN)	Definition
Green slow flash (2.5 Hz)	Module internal bus is not started
Red slow flash (2.5 Hz)	Module internal bus offline
ON (GREEN)	Operation normal
Flash (2.5 Hz) (RED/GREEN)	updating mode
Flash (10 Hz) (RED/GREEN)	firmware update
Double Flash (RED)	Module exception has been soft-restarted
0-15 channel indicator LED	Definition
ON	Output signal valid
OFF	Output signal invalid

3.2 Field channel LED indicator (Green)

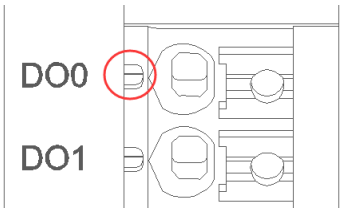

When output signal of output channel is valid, the corresponding field channel LED indicator is on.

3.3 Terminal definition

Terminal Number	Symbol	The Description
1	DO0	Signal output
2	DO1	
3	DO2	
4	DO3	
5	DO4	
6	DO5	
7	DO6	
8	DO7	
9	24V	Power input *(note1)*
10	DO8	Signal output
11	DO9	
12	DO10	
13	DO11	
14	DO12	
15	DO13	
16	DO14	
17	DO15	
18	24V	Power input*(note1)*

Note 1: There are two access methods for this power input port depending on the type of load.

A: When the load is ordinary resistive load, this port is the selected port.When the 24V power supply is connected, the output channel can output 0V normally, meanwhile the terminal channel indicator LED will be on.When the 24V power supply is not connected, the output channel can output 0V normally, but the terminal channel indicator LED will be off.

B: When the load is inductive loads such as coils, this port is the VCLAMP voltage clamp port. This port must be connected to the positive pole of the inductive load power supply; it could provide a continuous current circuit when the inductive load disconnects.

. It is recommended to use cables with cores smaller than 1mm²

The cold-pressed terminal parameters are as follows:

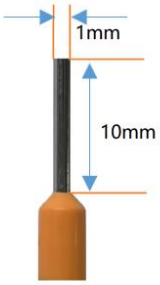

4 Wiring

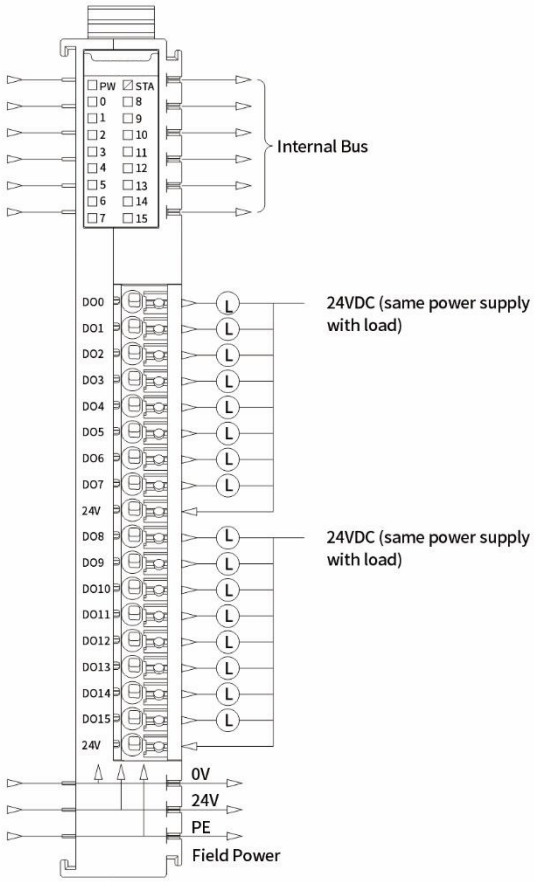

5 Process data definition

Output data								
Bit No	Bit 7	Bit 6	Bit 5	Bit 4	Bit 3	Bit 2	Bit 1	Bit 0
Byte 0	DO Ch#7	DO Ch#6	DO Ch#5	DO Ch#4	DO Ch#3	DO Ch#2	DO Ch#1	DO Ch#0
Byte 1	DO Ch#15	DO Ch#14	DO Ch#13	DO Ch#12	DO Ch#11	DO Ch#10	DO Ch#9	DO Ch#8

Data description:

DO Ch#(0-15): when this bit is 1, the corresponding channel output signal is valid, the output is low level, and the output is invalid when it is 0.

0：Output signal is invalid

1：Output signal is valid

6 Configuration parameter definitions

Configuration parameters								
Bit No	Bit 7	Bit 6	Bit 5	Bit 4	Bit 3	Bit 2	Bit 1	Bit 0
Byte 0	Fault Action for Output Ch#7	Fault Action for Output Ch#6	Fault Action for Output Ch#5	Fault Action for Output Ch#4	Fault Action for Output Ch#3	Fault Action for Output Ch#2	Fault Action for Output Ch#1	Fault Action for Output Ch#0
Byte 1	Fault Action for Output Ch#15	Fault Action for Output Ch#14	Fault Action for Output Ch#13	Fault Action for Output Ch#12	Fault Action for Output Ch#11	Fault Action for Output Ch#10	Fault Action for Output Ch#9	Fault Action for Output Ch#8
Byte 2	Fault Value for Output Ch#7	Fault Value for Output Ch#6	Fault Value for Output Ch#5	Fault Value for Output Ch#4	Fault Value for Output Ch#3	Fault Value for Output Ch#2	Fault Value for Output Ch#1	Fault Value for Output Ch#0
Byte 3	Fault Value for Output Ch#15	Fault Value for Output Ch#14	Fault Value for Output Ch#13	Fault Value for Output Ch#12	Fault Value for Output Ch#11	Fault Value for Output Ch#10	Fault Value for Output Ch#9	Fault Value for Output Ch#8

Data description:

Fault Action for Output Ch#(0-15)： Fault Output mode. When the IO module detects an internal bus exception and fails to communicate with the adapter. And the module will turn to offline mode, so the output data is processed in this way. (default: 0)

0: keep the last time output State.

1: output fault value.

Fault Value for Output Ch#(0-15)： when the Fault Output mode is 1, this bit sets the Fault Output Value, and this setting value will be outputted when the interal bus of IO module is offline. (default: 0)

0: Output low level.

1: Output high level.

A Dimension drawing

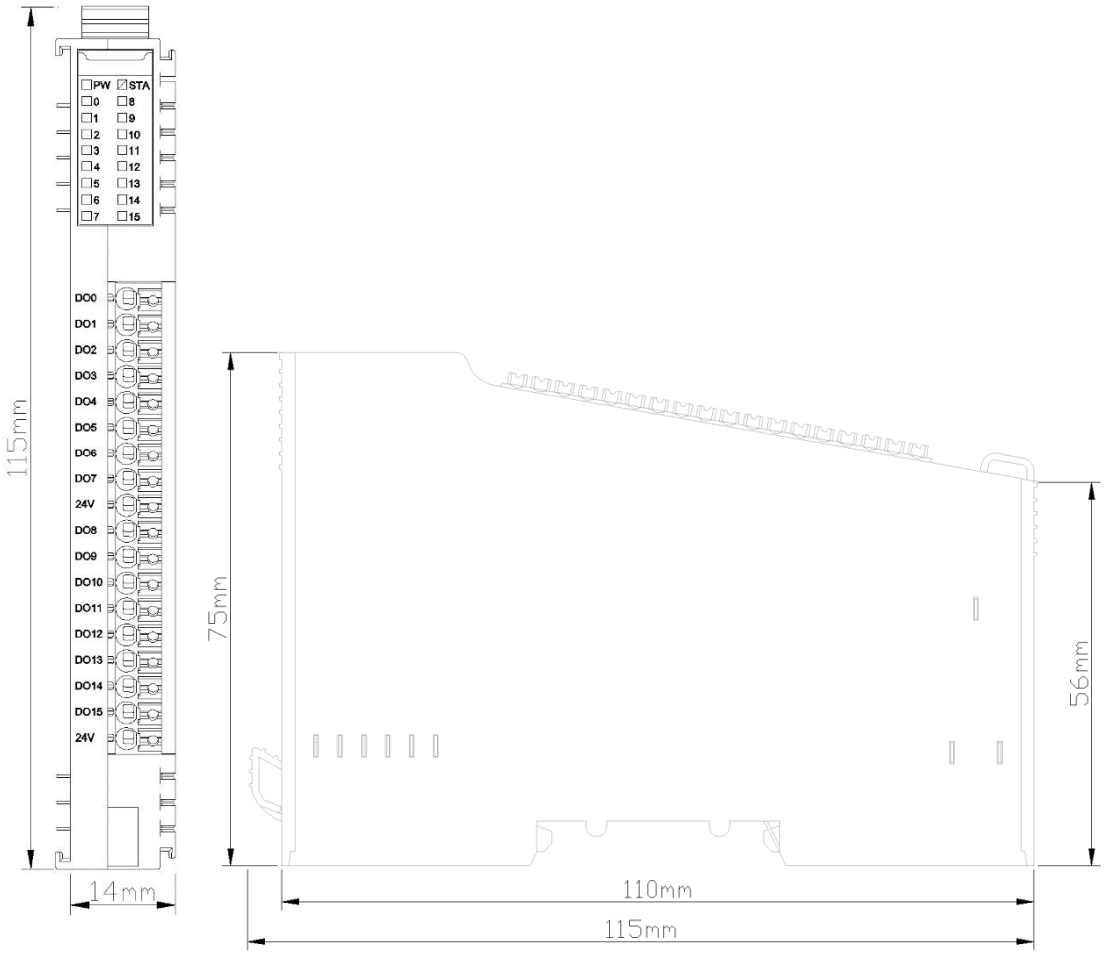

NT-2718 8 channels relay output 2A/30VDC/60W

1 Module features

- 8-channel relay normally on output
- 8 LED channel indicators
- Low on resistance (≤100mΩ)
- 250VAC/220VDC the max. switch voltage is 250VAC/220VDC

2 Technical Parameters

General parameters	
Power Consumption	Max.280mA@5.0Vdc
Isolation	I/O to internal bus：coil isolation(1600VAC)
Field Power	Not used
Wiring	Max.1.0mm² (AWG 17)
Mounting Type	35mm DIN-Rail
Size	115*14*75mm
Weight	65g
Environment Specification	
Operational Temperature	-40~85°C
Operational Humidity	5%~95%(No Condensation)
Ingress Protection Rating	IP20
Output Parameter	
Channel Number	8 channel relay normally on output
LED Indicator	8 channel output LED Indicator
Max. Switching Current	2A
Max. Switching Voltage	250VAC/220VDC
Max. Switching Power	62.5VA/60W
Contact Resistance	≤100mΩ
Output Delay	ON to OFF:Max.3ms OFF to ON:Max.3ms
Mechanical Endurance	$1x10^8$
Electricity Endurance	$1x10^5$
Vibration	10Hz~55Hz 3.3mm Double vibration amplitude
Impact	Stability：735m/s² Strength：980m/s²

3 Hardware Interface

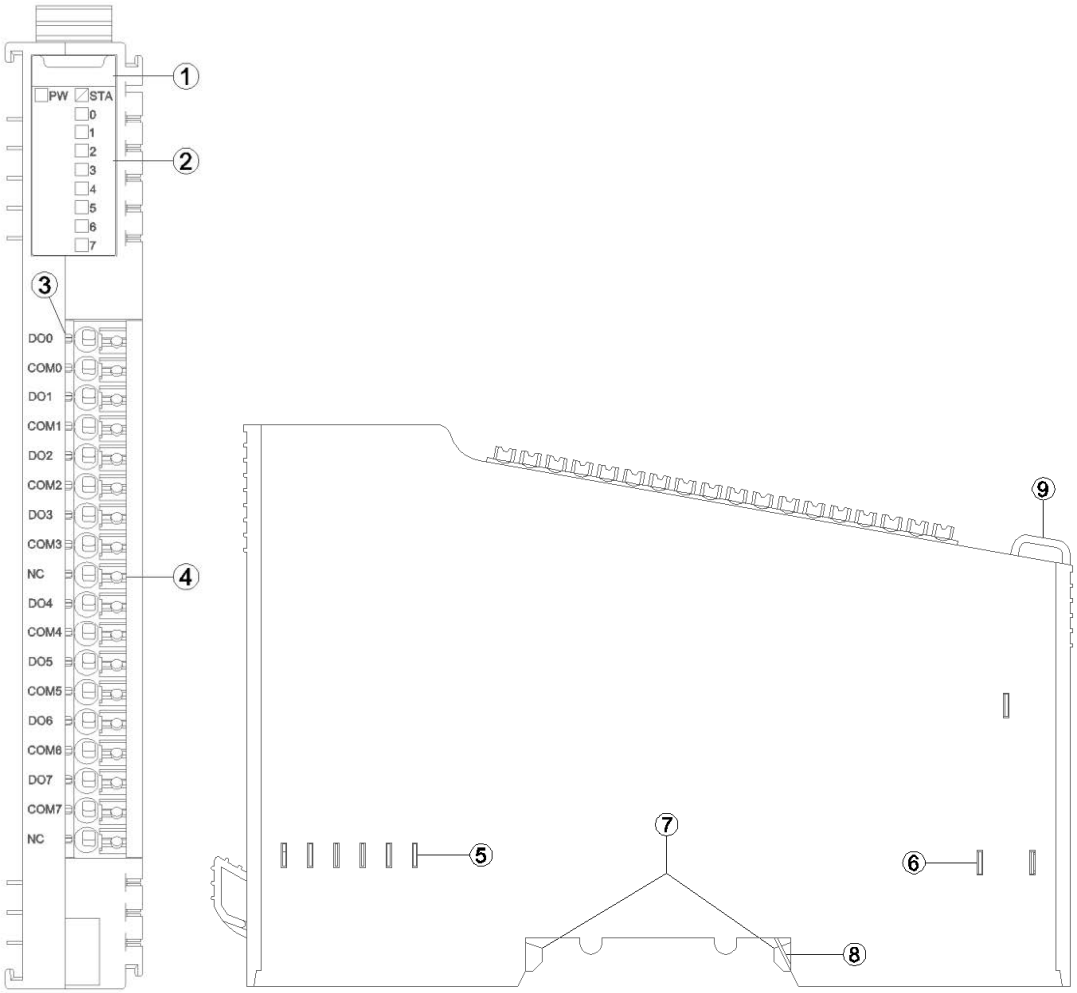

① Module Type

② State indicator

③ N/A

④ Wiring Terminal and identification

⑤ Internal Bus

⑥ Field Power

⑦ Buckle

⑧ Grounding Spring Sheet

⑨ Fixed Wiring Harness

3.1 LED indicator definition

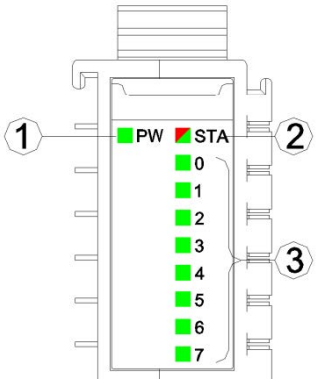

① Power LED indicator (green)

② Module State LED indicator (red/green)

③ Output channel LED indicator (green)

PW Power State (GREEN)	Definition
ON	Internal bus Power Normal
OFF	Internal bus Power Failure
STA Module State (RED/GREEN)	Definition
Green slow flash (2.5Hz)	Module internal bus is not started
Red slow flash (2.5Hz)	Module internal bus offline
ON (GREEN)	Operation normal
Flash(2.5Hz) (RED/GREEN)	Upgrading mode
Flash(10Hz) (RED/GREEN)	Firmware Update
Double Flash (RED)	Module Exception, has been soft-restarted
0-7 channel LED indicator (GREEN)	Definition
ON	Output signal valid
OFF	Output signal invalid

3.2 Terminal definition

Terminal Number	Definition	Description
1	DO0	Channel 0 output
2	COM0	Channel 0 Common Port
3	DO1	Channel 1 output
4	COM1	Channel 1 Common Port
5	DO2	Channel 2 output
6	COM2	Channel 2 Common Port
7	DO3	Channel 3 output
8	COM3	Channel 3 Common Port
9	NC	Not Connected
10	DO4	Channel 4 output
11	COM4	Channel 4 Common Port
12	DO5	Channel 5 output
13	COM5	Channel 5 Common Port
14	DO6	Channel 6 output
15	COM6	Channel 6 Common Port
16	DO7	Channel 7 output
17	COM7	Channel 7 Common Port
18	NC	Not Connected

It is recommended to use cables with cores greater than 0.2mm² and smaller than 1mm².

When connecting cables (terminals)with cores, need to check and connect them according to the corresponding node serial number.

The cold-pressed terminal parameters are as follows:

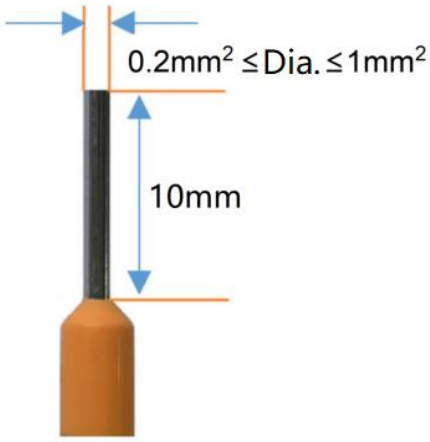

4 Wiring

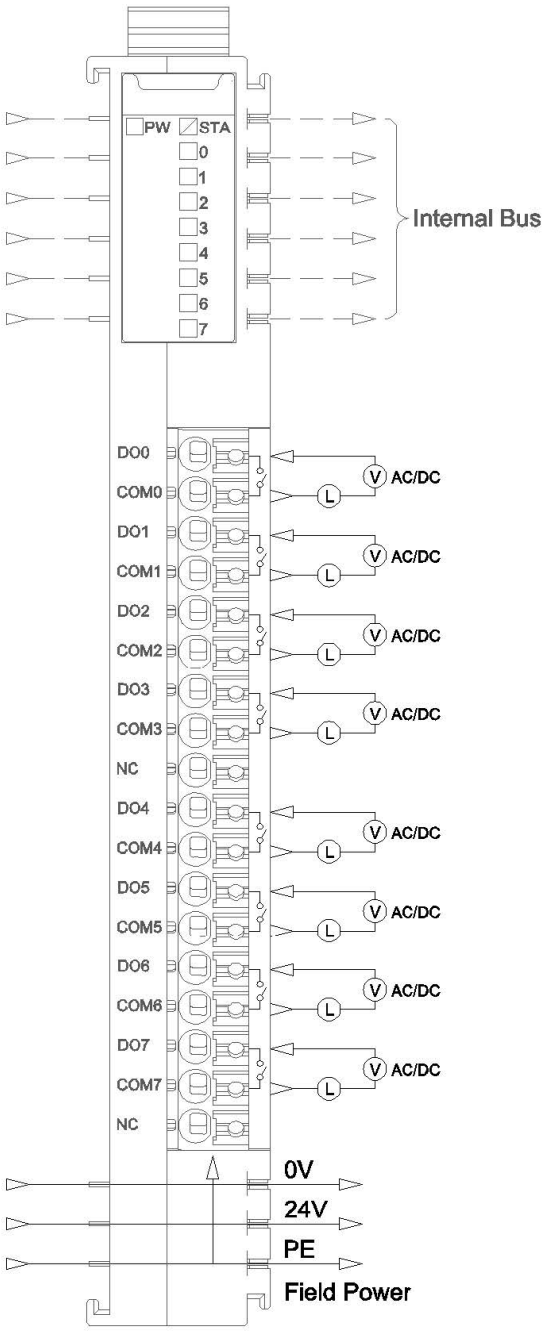
PW
STA
0
1
2
3
4
5
6
7
Internal Bus
DO0
COM0
DO1
COM1
DO2
COM2
DO3
COM3
NC
DO4
COM4
DO5
COM5
DO6
COM6
DO7
COM7
NC
V
L
AC/DC
0V
24V
PE
Field Power

5 Process data definition

Output Data								
Bit No	Bit 7	Bit 6	Bit 5	Bit 4	Bit 3	Bit 2	Bit 1	Bit 0
Byte 0	DO Ch#7	DO Ch#6	DO Ch#5	DO Ch#4	DO Ch#3	DO Ch#2	DO Ch#1	DO Ch#0

Data description：

DO Ch#(0-7)： When the bit is 1, the output signal of corresponding channel is effective and the output contact of relay is closed. When the bit is 0, the output is invalid and the relay contact is disconnected.

0: The output signal is invalid

1: The output signal is valid

6 Configuration parameters definition

Configuration parameters								
Bit No	Bit 7	Bit 6	Bit 5	Bit 4	Bit 3	Bit 2	Bit 1	Bit 0
Byte 0	Fault Action for Output Ch#7	Fault Action for Output Ch#6	Fault Action for Output Ch#5	Fault Action for Output Ch#4	Fault Action for Output Ch#3	Fault Action for Output Ch#2	Fault Action for Output Ch#1	Fault Action for Output Ch#0
Byte 1	Fault Value for Output Ch#7	Fault Value for Output Ch#6	Fault Value for Output Ch#5	Fault Value for Output Ch#4	Fault Value for Output Ch#3	Fault Value for Output Ch#2	Fault Value for Output Ch#1	Fault Value for Output Ch#0

Data description：

Fault Action for Output Ch#(0-7)： Fault output mode. When IO module detects that internal bus communication is failed and enters offline mode, the output data will be processed in this mode. (Default: 0)

0: Hold the last output state.

1: Output fault value

Fault Value for Output Ch#(0-7)： When the fault output mode is 1, this bit would set the fault output value, and when the internal bus of IO module is offline, this setting value will be output.(Default: 0)

0: Output low level.

1: Output high level.

A Dimension drawing

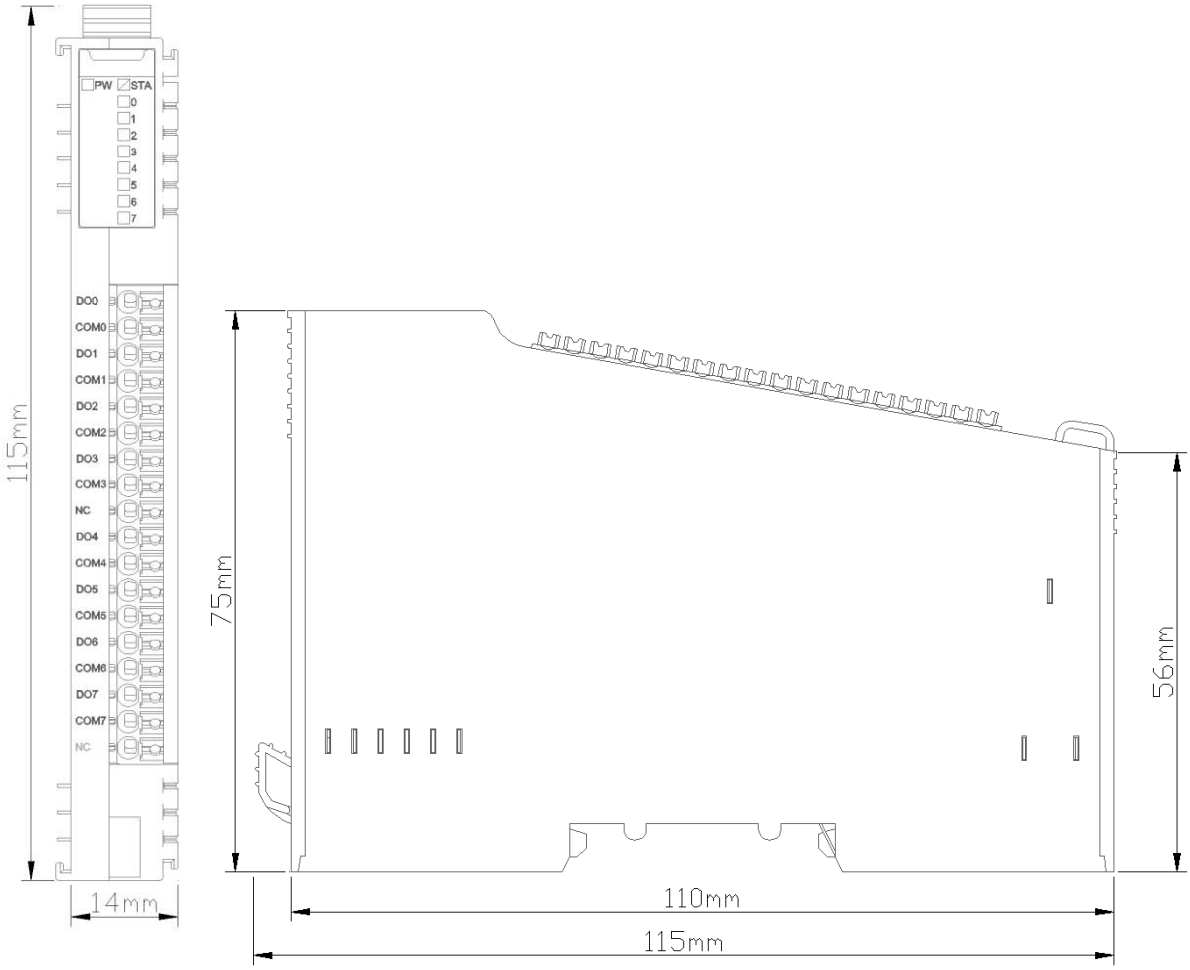

NT-2738 8 channels relay output 1A/30VDC/30W

1 Module features

- 8-channel relay normally on output
- 8 LED channel indicators
- Low on resistance (≤100mΩ)
- With isolation between channels
- Built-in TVS bidirectional diode, built-in RC circuit
- Resistive and inductive loads can be connected

2 Technical Parameters

General parameters	
Power Consumption	Max.250mA@5.0Vdc
Isolation	I/O channel to internal Bus isolation voltage AC 500V Isolation voltage between channels AC 500V
Field Power	Not used
Wiring	Max.1.0mm² (AWG 17)
Mounting Type	35mm DIN-Rail
Size	115*14*75mm
Weight	65g
Environment Specification	
Operational Temperature	-40~85℃
Operational Humidity	5%~95%(No Condensation)
Ingress Protection Rating	IP20
Output Parameter	
Channel Number	8 channel Relay normally on output
LED Indicator	8 channel output LED Indicator
Max. Switching Current	Resistive load: 1A Inductive load: 1A
Max. Switching Voltage	30VDC
Max. Switching Power	30W
Switching Frequency	Resistive load：Max 2Hz Inductive load：Max 0.5Hz
Contact Resistance	≤100mΩ
Output Delay	ON to OFF: Max.10ms OFF to ON: Max.10ms
Mechanical Endurance	$2x10^7$
Electricity Endurance	$1x10^5$
Vibration	10Hz~55Hz 1.5mm Double vibration amplitude
Impact	Stability：$98m/s^2$ Strength：$980m/s^2$

3 Hardware Interface

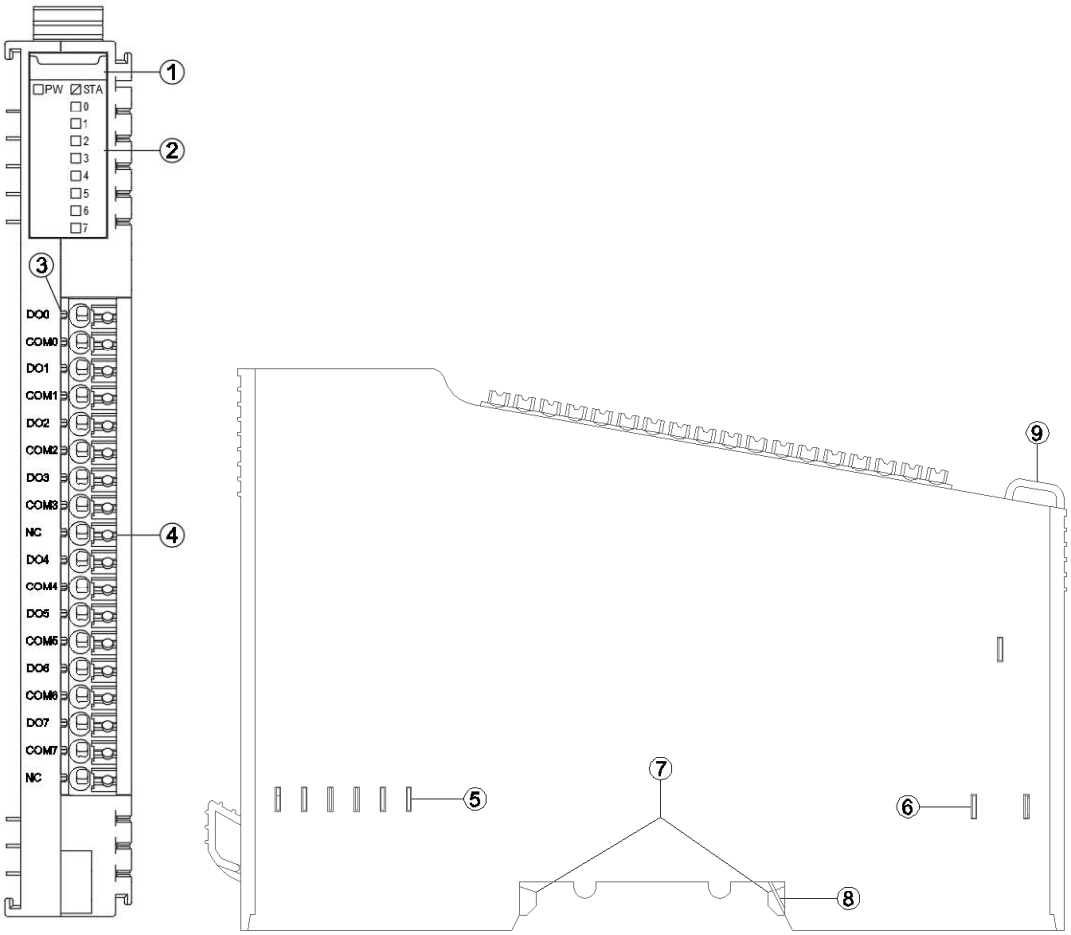

① Module Type

② State indicator

③ N/A

④ Wiring Terminal and identification

⑤ Internal Bus

⑥ Filed Power

⑦ Buckle

⑧ Grounding Spring Sheet

⑨ Fixed Wiring Harness

3.1 LED Indicator definition

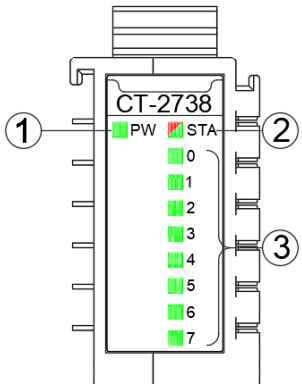

① Power LED indicator (green)

② Module State LED indicator (red/green)

③ Output channel LED indicator (green)

PW Power State (RED)	Definition
ON	Internal bus Power Normal
OFF	Internal bus Power Failure
STA Module State (RED/GREEN)	Definition
Green slow flash (2.5Hz)	Module internal bus is not started
Red slow flash (2.5Hz)	Module internal bus offline
ON (GREEN)	Operation normal
Flash(2.5Hz) (RED/GREEN)	Upgrading mode
Flash(10Hz) (RED/GREEN)	Firmware Update
Double Flash (RED)	Module Exception, has been soft-restarted
0-7 channel LED indicator (GREEN)	Definition
ON	Output signal valid
OFF	Output signal invalid

3.2 Terminal definition

Terminal Number	Definition	Description
1	DO0	Channel 0 output
2	COM0	Channel 0 Common Port
3	DO1	Channel 1 output
4	COM1	Channel 1 Common Port
5	DO2	Channel 2 output
6	COM2	Channel 2 Common Port
7	DO3	Channel 3 output
8	COM3	Channel 3 Common Port
9	NC	Not Connected
10	DO4	Channel 4 output
11	COM4	Channel 4 Common Port
12	DO5	Channel 5output
13	COM5	Channel 5 Common Port
14	DO6	Channel 6 output
15	COM6	Channel 6 Common Port
16	DO7	Channel 7 output
17	COM7	Channel 7 Common Port
18	NC	Not Connected

It is recommended to use cables with cores greater than 0.2mm² and smaller than 1mm².

When connecting cables (terminals)with cores, need to check and connect them according to the corresponding node serial number.

The cold-pressed terminal parameters are as follows:

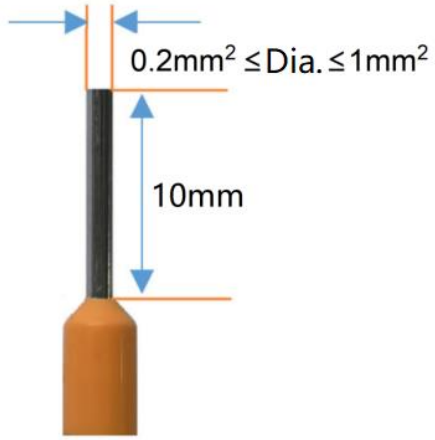

4 Wiring

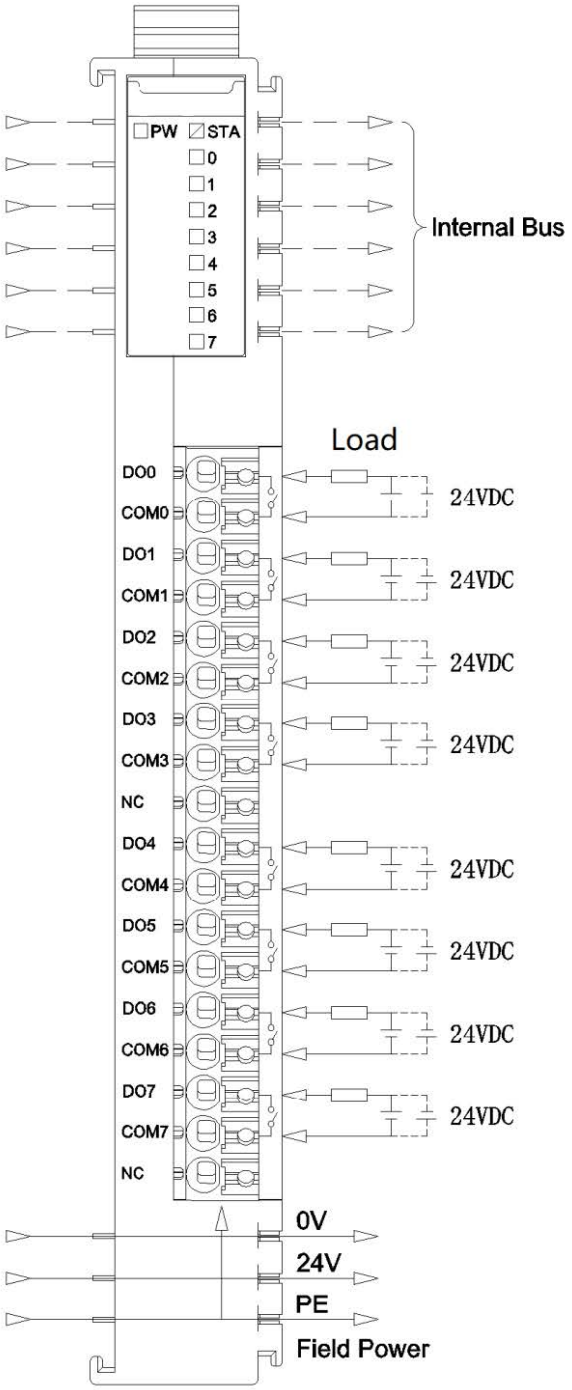
PW
STA
0
1
2
3
4
5
6
7
Internal Bus
Load
DO0
COM0
DO1
COM1
DO2
COM2
DO3
COM3
NC
DO4
COM4
DO5
COM5
DO6
COM6
DO7
COM7
NC
24VDC
0V
24V
PE
Field Power

5 Process data definition

Output Data								
Bit No	Bit 7	Bit 6	Bit 5	Bit 4	Bit 3	Bit 2	Bit 1	Bit 0
Byte 0	DO Ch#7	DO Ch#6	DO Ch#5	DO Ch#4	DO Ch#3	DO Ch#2	DO Ch#1	DO Ch#0

Data description ：

DO Ch#(0-7)： When the bit is 1, the output signal of corresponding channel is effective and the output contact of relay is closed. When the bit is 0, the output is invalid and the relay contact is disconnected.

0: The output signal is invalid

1: The output signal is valid

6 Configuration parameters definition

Configuration parameters								
Bit No	Bit 7	Bit 6	Bit 5	Bit 4	Bit 3	Bit 2	Bit 1	Bit 0
Byte 0	Fault Action for Output Ch#7	Fault Action for Output Ch#6	Fault Action for Output Ch#5	Fault Action for Output Ch#4	Fault Action for Output Ch#3	Fault Action for Output Ch#2	Fault Action for Output Ch#1	Fault Action for Output Ch#0
Byte 1	Fault Value for Output Ch#7	Fault Value for Output Ch#6	Fault Value for Output Ch#5	Fault Value for Output Ch#4	Fault Value for Output Ch#3	Fault Value for Output Ch#2	Fault Value for Output Ch#1	Fault Value for Output Ch#0

Data description：

Fault Action for Output Ch#(0-7)： Fault output mode. When IO module detects that internal bus communication is failed and enters offline mode, the output data will be processed in this mode. (Default: 0)

0: Hold the last output state.

1: Output fault value

Fault Value for Output Ch#(0-7)： When the fault output mode is 1, this bit would set the fault output value, and when the internal bus of IO module is offline, this setting value will be output. (Default: 0)

0: Output low level.

1: Output high level.

A Dimension drawing

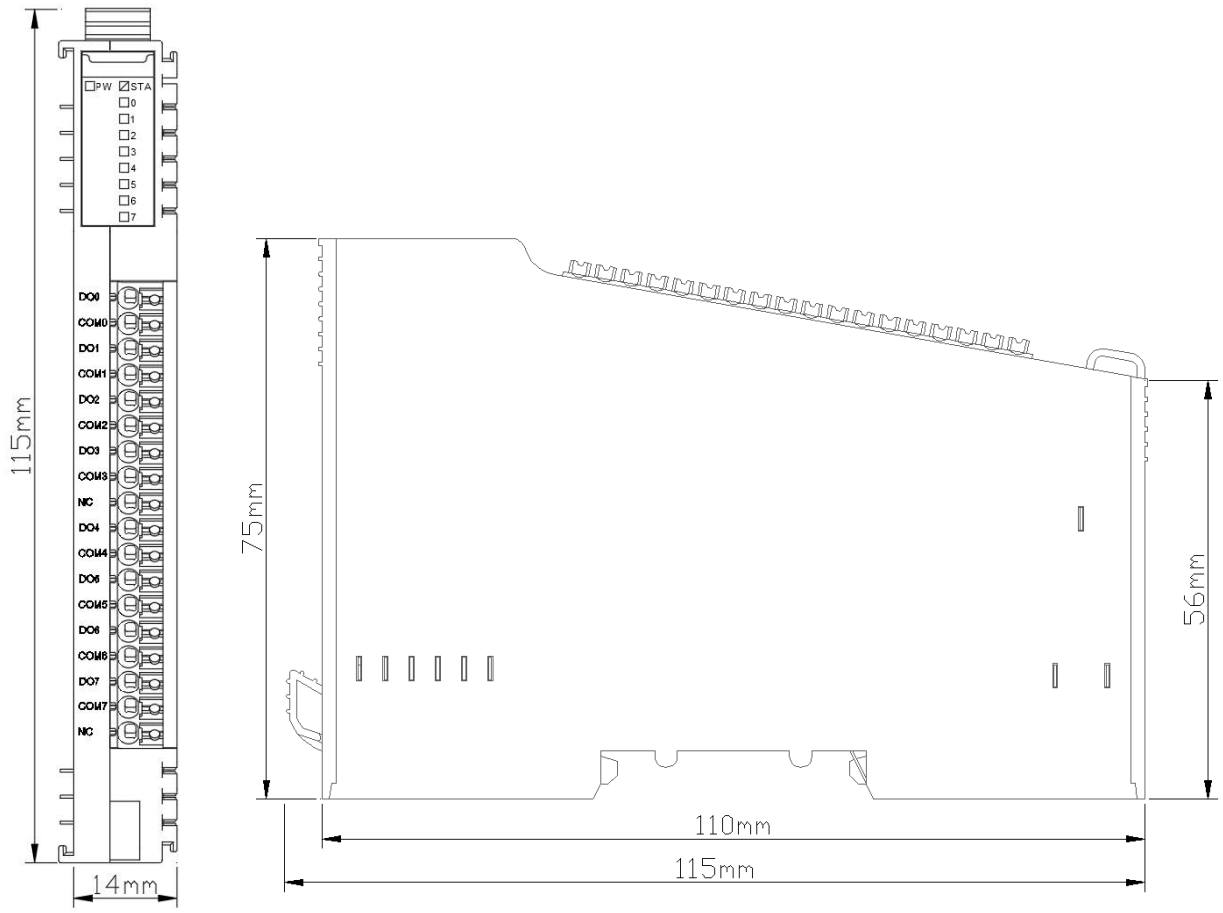

NT-2754 4 channels relay output,3A@30VDC/90W

1 Module features

- 4-channels relay normally on output
- 4 LED channel indicators
- Low on resistance (≤100mΩ)
- With isolation between channels
- Built-in unidirectional (freewheel diode) FWD, built-in RC circuit
- Resistive and inductive loads can be connected

2 Technical Parameters

General parameters	
Power Consumption	Max.125mA@5.0Vdc
Isolation	I/O to internal bus isolation voltage: AC 500V Isolation voltage between channels AC 500V
Field Power	Not used
Wiring	I/O wiring ： Max.1.0mm^2(AWG 17)
Mounting Type	35mm DIN-Rail
Size	115*14*75mm
Weight	65g
Environment Specification	
Operational Temperature	-40~85°C
Operational Humidity	5%~95% (No Condensation)
Ingress Protection Rating	IP20
Output Parameter	
Channel Number	4 channel Relay normally on output
LED Indicator	4 channel output LED Indicator
Max. Switching Current	Resistive load：3A Inductive load：2A
Max. Switching Voltage	30VDC
Max. Switching Power	90W
Switching Frequency	Resistive load：Max 2Hz Inductive load：Max 0.5Hz
Contact Resistance	≤100mΩ
Output Delay	ON to OFF:Max.10ms OFF to ON:Max.10ms
Mechanical Endurance	2x10^7
Electricity Endurance	1x10^5
Vibration	10Hz~55Hz 1.5mm Double vibration amplitude
Impact	Stability：98m/s^2 Strength：980m/s^2

3 Hardware Interface

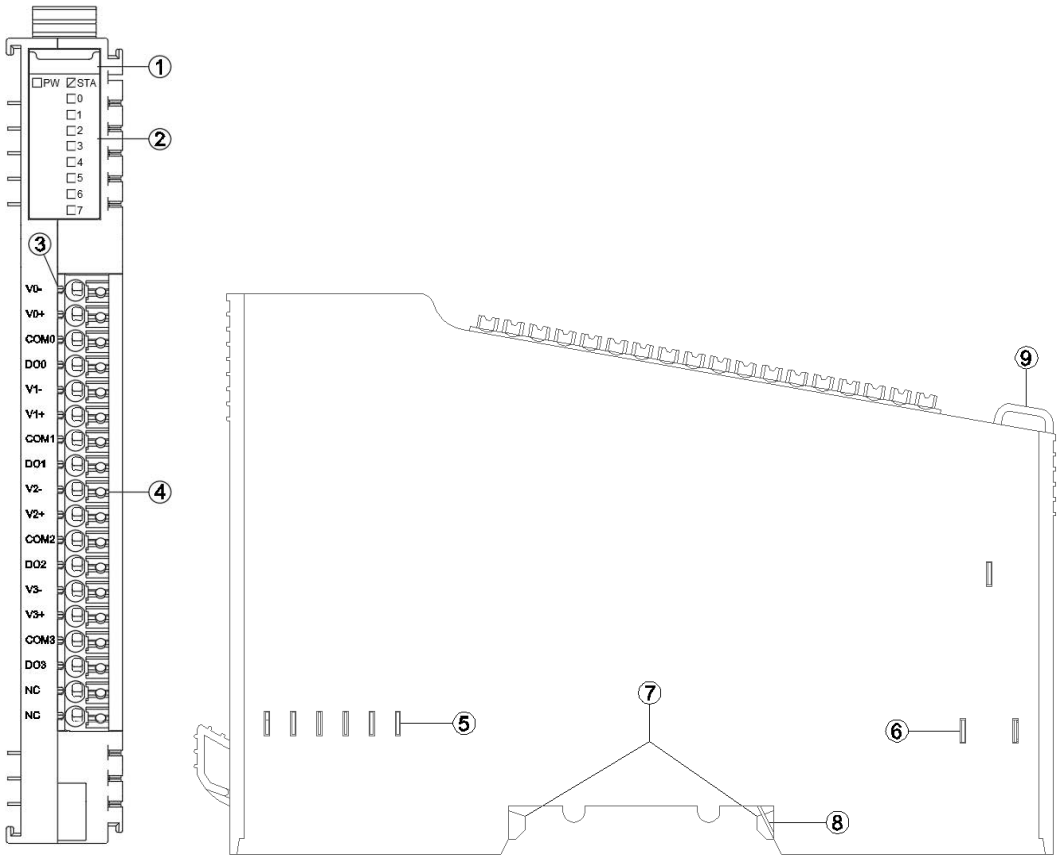

① Module Type

② State indicator

③ N/A

④ Wiring Terminal and identification

⑤ Internal Bus

⑥ Field Power

⑦ Buckle

⑧ Grounding Spring Sheet

⑨ Fixed Wiring Harness

3.1 LED LED indicator definition

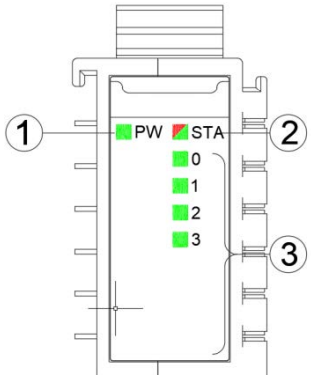

① Power LED indicator (green)

② Module State LED indicator (red/green)

③ Output channel LED indicator (green)

PW Power State (RED)	Definition
ON	Internal bus Power Normal
OFF	Internal bus Power Failure
STA Module State (RED/GREEN)	Definition
Green slow flash (2.5Hz)	Module internal bus is not started
Red slow flash (2.5Hz)	Module internal bus offline
ON (GREEN)	Operation normal
Flash(2.5Hz) (RED/GREEN)	Upgrading mode
Flash(10Hz) (RED/GREEN)	Firmware Update
Double Flash (RED)	Module Exception has been soft-restarted
0-3 channel LED indicator (GREEN)	Definition
ON	Output signal valid
OFF	Output signal invalid

3.2 Terminal definition

Terminal Number	Definition	Description
1	V0-	Channel 0 power supply
2	V0+	
3	COM0	Channel 0
4	DO0	
5	V1-	Channel 1 power supply
6	V1+	
7	COM1	Channel 1
8	DO1	
9	V2-	Channel 2 power supply
10	V2+	
11	COM2	Channel 2
12	DO2	
13	V3-	Channel 3 power supply
14	V3+	
15	COM3	Channel 3
16	DO3	
17	NC	Not Connected
18		

Note: Internal V- and COM short circuited for each channel.

It is recommended to use cables with cores greater than 0.2mm² and smaller than 1mm².

When connecting cables (terminals)with cores, need to check and connect them according to the corresponding node serial number.

The cold-pressed terminal parameters are as follows:

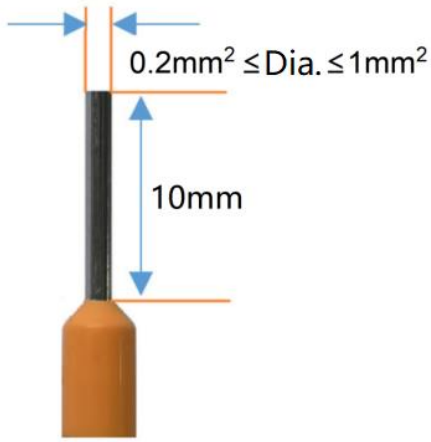

4 Wiring

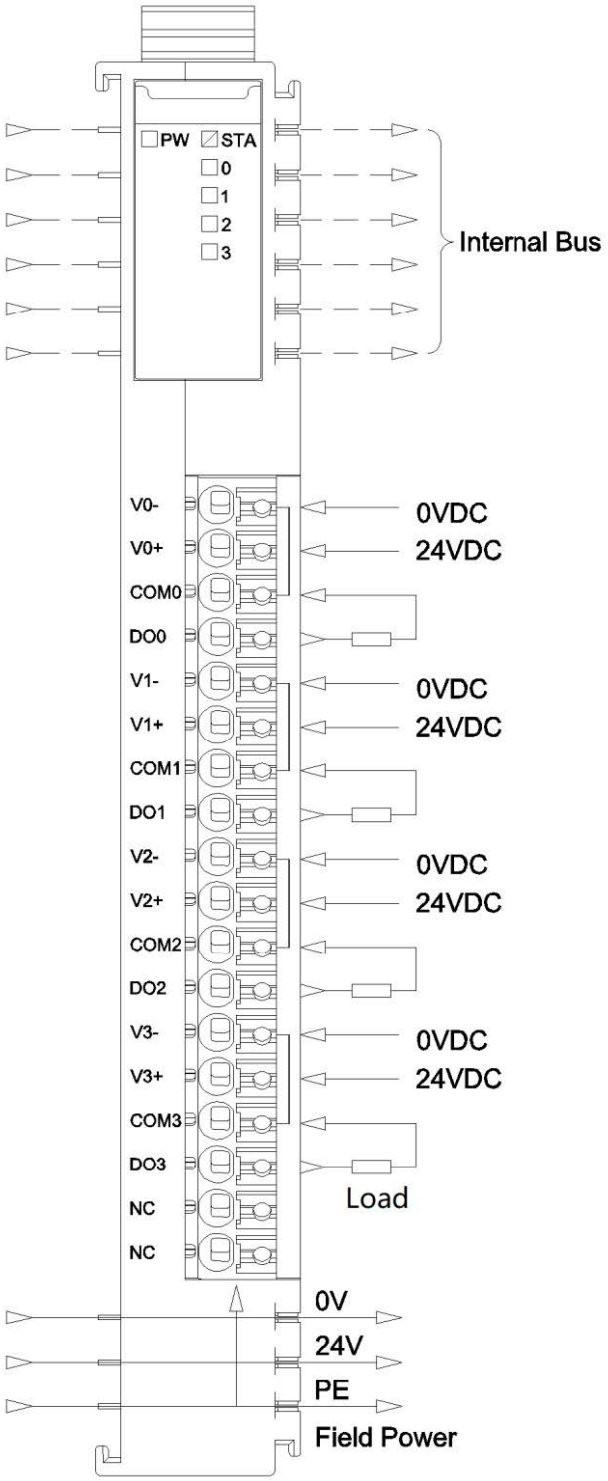
PW
STA
0
1
2
3
Internal Bus
V0-
V0+
COM0
DO0
V1-
V1+
COM1
DO1
V2-
V2+
COM2
DO2
V3-
V3+
COM3
DO3
NC
NC
0VDC
24VDC
0VDC
24VDC
0VDC
24VDC
0VDC
24VDC
Load
0V
24V
PE
Field Power

5 Process data definition

Output Data								
Bit No	Bit 7	Bit 6	Bit 5	Bit 4	Bit 3	Bit 2	Bit 1	Bit 0
Byte 0	Reserved				DO Ch#3	DO Ch#2	DO Ch#1	DO Ch#0

Data description：

DO Ch#(0-3)： When the bit is 1, the output signal of corresponding channel is effective and the relay output contact is closed. When the bit is 0, the output is invalid and the relay contact is disconnected.

0: The output signal is invalid

1: The output signal is valid

6 Configuration parameters definition

Configuration parameters								
Bit No	Bit 7	Bit 6	Bit 5	Bit 4	Bit 3	Bit 2	Bit 1	Bit 0
Byte 0	Reserved				Fault Action for Output Ch#3	Fault Action for Output Ch#2	Fault Action for Output Ch#1	Fault Action for Output Ch#0
Byte 1	Reserved				Fault Value for Output Ch#3	Fault Value for Output Ch#2	Fault Value for Output Ch#1	Fault Value for Output Ch#0

Data description：

Fault Action for Output Ch#(0-3)： Fault output mode. When IO module detects that internal bus communication is failed and enters offline mode, the output data will be processed in this mode. (Default: 0)

0: Hold the last output state.

1: Output fault value

Fault Value for Output Ch#(0-3)： When the fault output mode is 1, this bit would set the fault output value, and when the internal bus of IO module is offline, this setting value will be output. (Default: 0)

0: Output low level.

1: Output high level.

A Dimension drawing

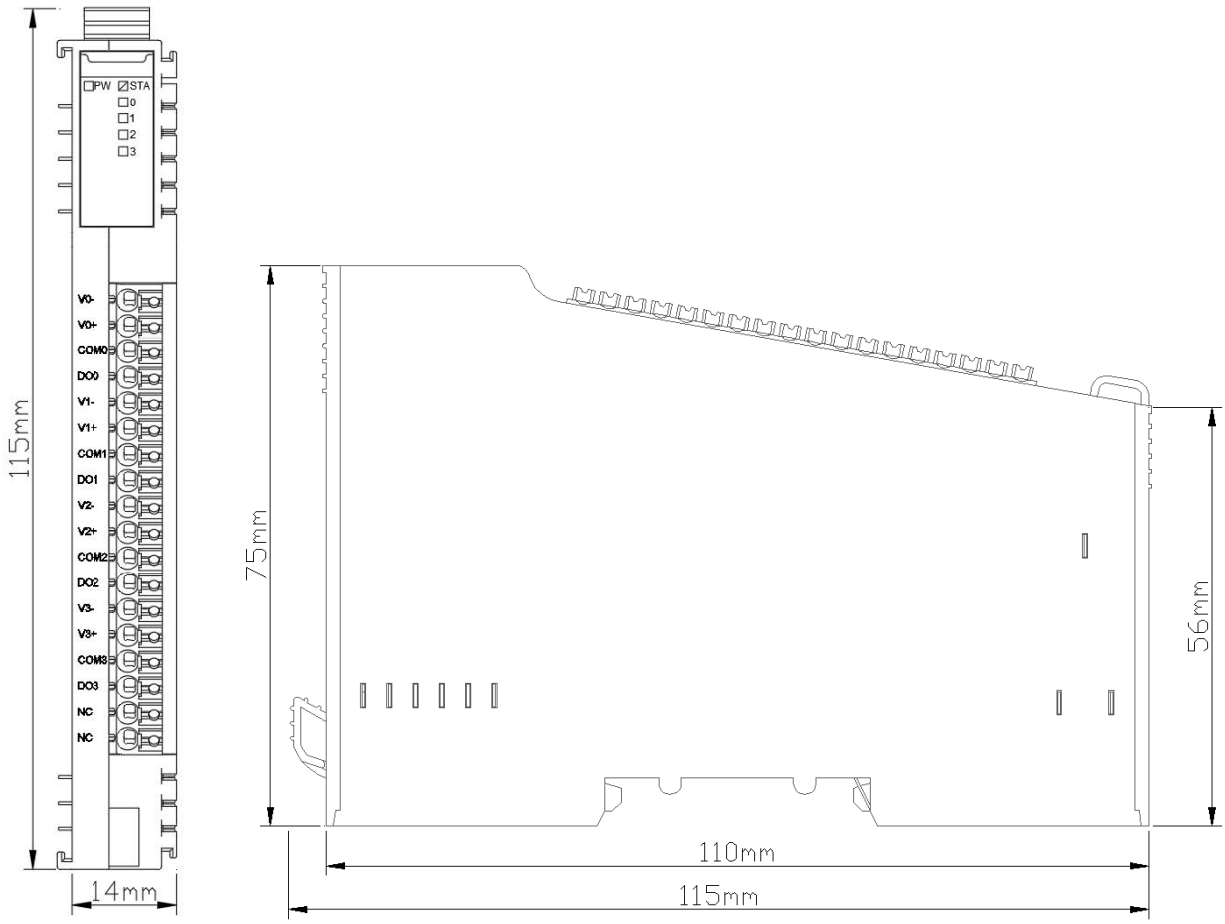

NT-3134 4 channels Voltage Input

0~5/0~10/±5/±10VDC,15 bits /16 bits

1 Module features

- ◆ The module supports 4 channels of voltage signal input
- ◆ The module can collect 0~5VDC, 0~10VDC, ±5VDC, ±10VDC, with 15 bits and 16 bits resolution
- ◆ The module carries with 4 analog input channel LED indicator
- ◆ Filtering time can be set
- ◆ Channels can be disabled independently
- ◆ With isolation between channels

2 Technical Parameters

General parameters	
Power	Max.260mA@5.0Vdc
Isolation	I/O to internal bus isolation voltage AC 500V The isolation voltage between channels is AC 500V
Field Power	Not used
Wiring	Max.1.0mm² (AWG 17)
Mounting Type	35mmDIN-Rail
Size	115*14*75mm
Weight	65g
Environment Specification	
Operational Temperature	-40~55℃
Operational Humidity	5%~95% RH (No Condensation)
Ingress Protection Rating	IP20
Input Parameter	
Channel Number	4 channel voltage input
LED Indicator	4 channel input indicators
Input Voltage Range	0~5VDC, 0~10VDC, ±5VDC and ±10VDC
Resolution	16 bits
Accuracy	±0.3%@25℃ ±0.5%@-40~55℃
Sampling Rate	12ms/4 channel
Output Impedance	100KΩ（±5%)
Channel disable	supported
Diagnostic function	Channel disabled fault value: -32767 Overflow: 32767 (Overflow failure value supported only in standard mode) Underflow: -32768(Underflow fault value supported only in standard mode)

3 Hardware Interface

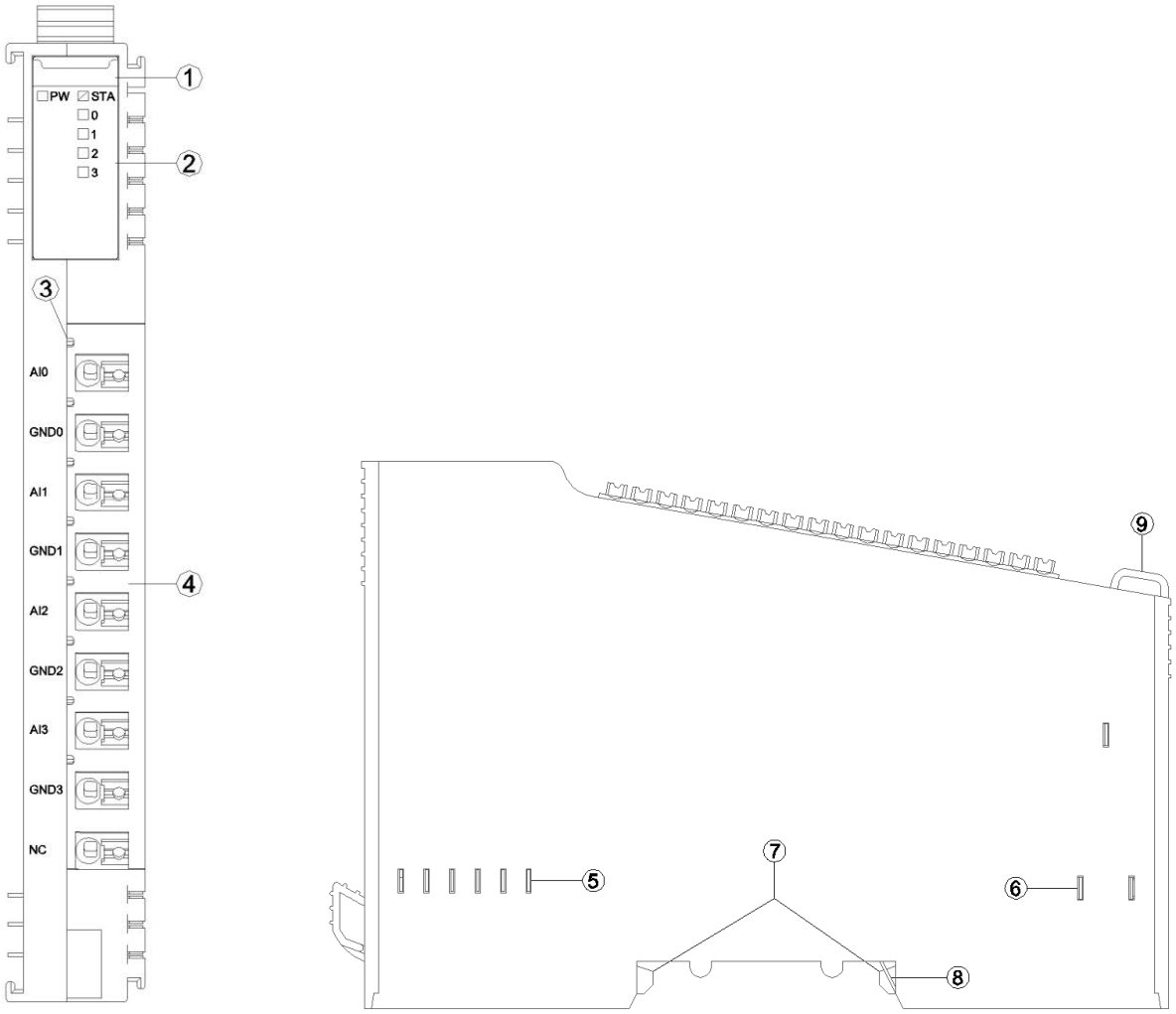

① Module Type

② State indicator

③ N/A

④ Wiring Terminal and identification

⑤ Internal Bus

⑥ Field Power

⑦ Buckle

⑧ Grounding Spring Sheet

⑨ Fixed Wiring Harness

3.1 LED indicator definition

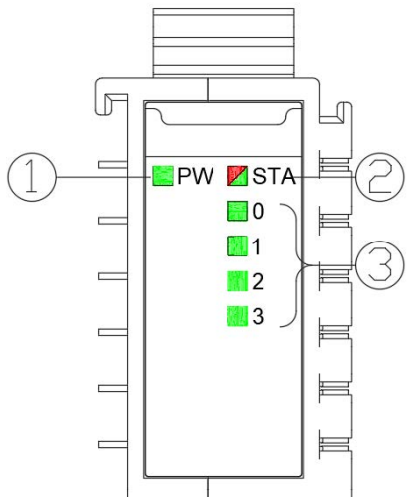

① Power LED indicator (green)

② Module State LED indicator (red/green)

③ Input channel LED indicator (green)

PW POWER STATE (GREEN)	Definition
ON	Internal bus Power Normal
OFF	Internal bus Power Failure
STA MODULE STATE (RED/GREEN)	Definition
Green slow flash (2.5Hz)	Module internal bus is not started
Red slow flash (2.5Hz)	Module internal bus is offline
ON (GREEN)	Operation normal
Flash(2.5Hz) (RED/GREEN)	Upgrading mode
Flash(10Hz) (RED/GREEN)	Firmware Update
Double Flash (RED)	Module Exception, has been soft-restarted
0-3 channel LED indicator (GREEN)	Definition
ON	The input signal exceeds 0.15Vor - 0.15V
OFF	Input signal invalid

3.2 Terminal definition

Terminal Number	Definition	Definition
1	AI0	Signal Input CH0
2	GND0	Common port CH0
3	AI1	Signal Input CH1
4	GND1	Common port CH1
5	AI2	Signal Input CH2
6	GND2	Common port CH2
7	AI3	Signal Input CH3
8	GND3	Common port CH3
9	NC	Not Connected

It is recommended to use cables with cores greater than 0.2mm² and smaller than 1mm².

When connecting cables (terminals)with cores, need to check and connect them according to the corresponding node serial number.

The cold-pressed terminal parameters are as follows:

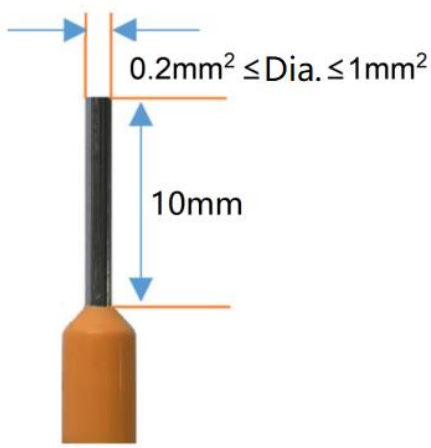

4 Wiring

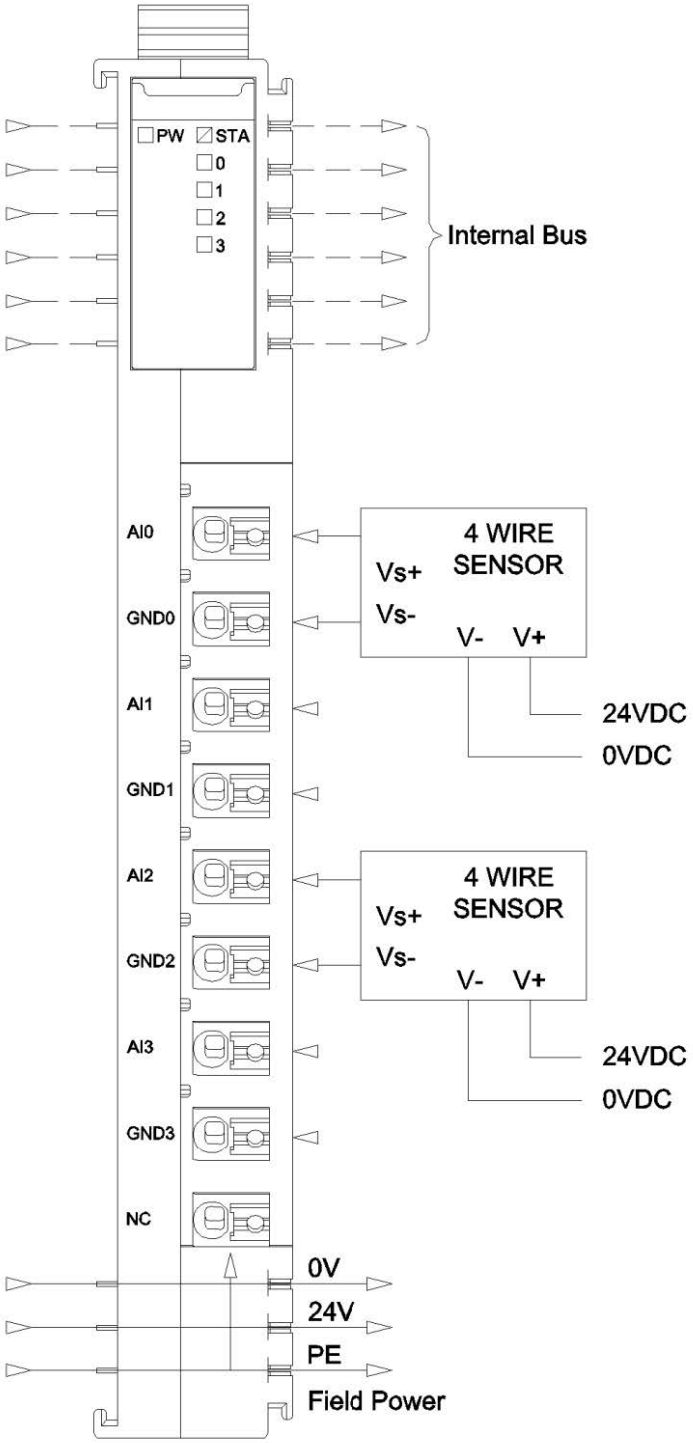
PW
STA
0
1
2
3
Internal Bus
AI0
GND0
AI1
GND1
AI2
GND2
AI3
GND3
NC
4 WIRE SENSOR
Vs+
Vs-
V-
V+
24VDC
0VDC
4 WIRE SENSOR
Vs+
Vs-
V-
V+
24VDC
0VDC
0V
24V
PE
Field Power

5 Process data definition

Input Data								
Bit No	Bit 7	Bit 6	Bit 5	Bit 4	Bit 3	Bit 2	Bit 1	Bit 0
Byte 0	Analog Input Data (CH 0)							
Byte 1								
Byte 2	Analog Input Data (CH 1)							
Byte 3								
Byte 4	Analog Input Data (CH 2)							
Byte 5								
Byte 6	Analog Input Data (CH 3)							
Byte 7								
Byte 8	Analog Input Data (CH 4)							
Byte 9								
Byte 10	Analog Input Data (CH 5)							
Byte 11								
Byte 12	Analog Input Data (CH 6)							
Byte13								
Byte 14	Analog Input Data (CH 7)							
Byte 15								

5.1 Process data definition (Standard mode)

Data description：

Analog Input Data (CH0-7)：Voltage input data value

Process data definition(8AI)						
Voltage (0-5V)	Voltage (0-10V)	Voltage (±5V)	Voltage (±10V)	Decimal	HEX	
>5.06	>10.12	>5.06	>10.12	32767	0x7FFF	Overflow
5.06	10.12	5.06	10.12	27979	0x6D4B	Exceeds the upper limit
5V+0.1808mv	10V+0.3617mv	5V+0.1808mv	10V+0.3617mv	27649	0x6C01	
5	10	5	10	27648	0x6C00	Rated range
.	.	.	.	.	.	
.	.	.	.	.	.	
2.5	5	2.5	5	13824	0x3600	
.	.	.	.	.	.	
.	.	.	.	.	.	
0	0	0	0	0	0x0000	
/	/	.	.	.	.	
/	/	.	.	.	.	
/	/	-2.5	-5	-13824	0XCA00	
/	/	.	.	.	.	
/	/	.	.	.	.	
/	/	-5	-10	-27648	0x9400	
/	/	-5V-0.1808mv	-10V-0.3617mv	-27649	0x93FF	Exceeds the lower limit
/	/	-5.06	-10.12	-27979	0x92B5	
/	/	-5.06<	-10.12<	-32768	0x8000	Underflow

5.2 Process data definition（special mode）

Process data definition (8AI)					
Voltage (0-5V)	Voltage (0-10V)	Voltage (±5V)	Voltage (±10V)	Decimal	HEX
5	10	5	10	32767	0x7FFF
.	.	.	.	.	.
.	.	.	.	.	.
2.5	5	2.5	5	16383	0x3FFF
.	.	.	.	.	.
.	.	.	.	.	.
0	0	0	0	0	0x0000
/	/	.	.	.	.
/	/	.	.	.	.
/	/	-2.5	-5	-16384	0xC000
/	/	.	.	.	.
/	/	.	.	.	.
/	/	-5	-10	-32768	0x8000

6 Configuration parameters definition

Configuration Parameters								
Bit No	Bit 7	Bit 6	Bit 5	Bit 4	Bit 3	Bit 2	Bit 1	Bit 0
Byte 0	Reserved						Range_ Mode	16Bit Data Format
Byte 1	Voltage Type (CH 1)				Voltage Type (CH 0)			
Byte 2	Voltage Type (CH 3)				Voltage Type (CH 2)			
Byte 3	Reserved							
Byte 4								
Byte 5	Filtering Time (CH0)							
Byte 6								
Byte 7	Filtering Time (CH1)							
Byte 8								
Byte 9	Filtering Time (CH2)							
Byte 10								
Byte 11	Filtering Time (CH3)							
Byte 12								
Byte 13 … Byte 29	Reserved							

Data description：

16Bit Data Format： Sequence of 16-bit data byte transmission (Default:0)

0：A_B

1：B_A

Range_Mode： Process data mode (default: standard mode)

Standard mode: same with SIEMENS process data definition

Special mode: max range of the hardware.

Voltage Type(CH 0-3)： Input voltage type (Default:3)

0：disabled

1：0~5Vdc

2：-5~5Vdc

3：0~10Vdc

4：-10~10Vdc

Filtering Time(CH0-CH3)： The input filtering time of the channel, unit in “ms”. (Default：10)

A Dimension drawing

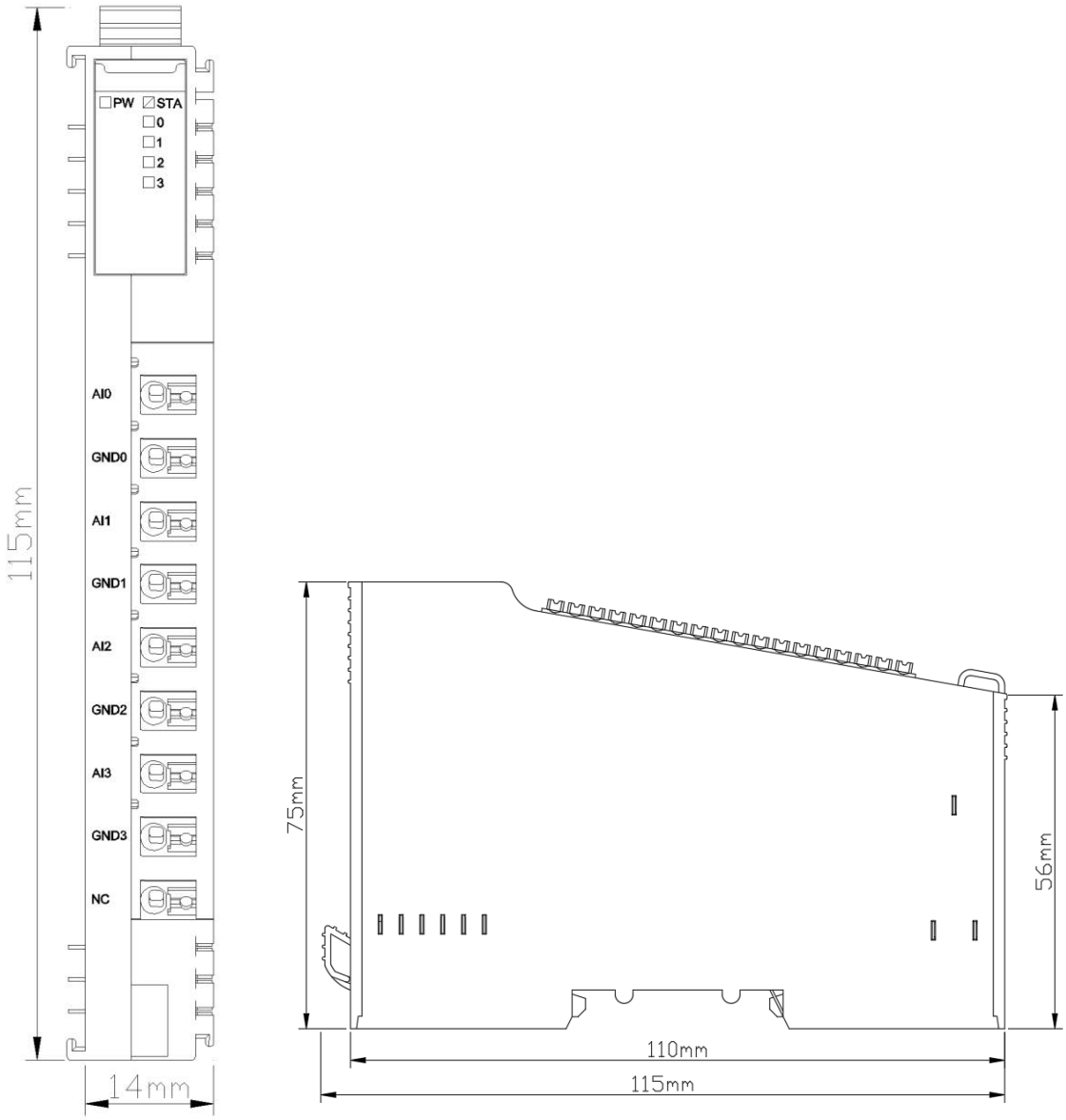

NT-3158: 8 channels voltage Input

0~5V/0~10/±5/±10VDC, 12Bits

1 Module features

◆ the module supports 8 channels of voltage signal input

◆ the module could collect 0~5VDC, 0~10VDC, ±5VDC, ±10VDC, with a 12-bit resolution

◆ the module carries with 8 analog input channel LED indicator

◆ the module input signal is a single ended common grounding input

2 Technical Parameters

General parameters	
Power	Max.90mA@5.0Vdc
Isolation	I/O to internal bus: opto-couple isolation (3KVrms)
Field Power	Not used
Wiring	Max.1.0mm² (AWG 17)
Mounting Type	35mmDIN-Rail
Size	115*14*75mm
Weight	65g
Environment Specification	
Operational Temperature	-40~85℃
Operational Humidity	5%~95% RH(No Condensation)
Ingress Protection Rating	IP20
Input Parameter	
Channel Number	8 channel voltage input
LED Indicator	8 channel input indicators
Input Voltage Range	0~5VDC、0~10VDC、±5VDC、±10VDC
Resolution	12Bit
Accuracy	±0.3%@25℃ ±0.5%@-40~85℃
Sampling Rate	1ms/8 channels
Output Impedance	1MΩ
Common Terminal	Common Grounding Input

3 Hardware Interface

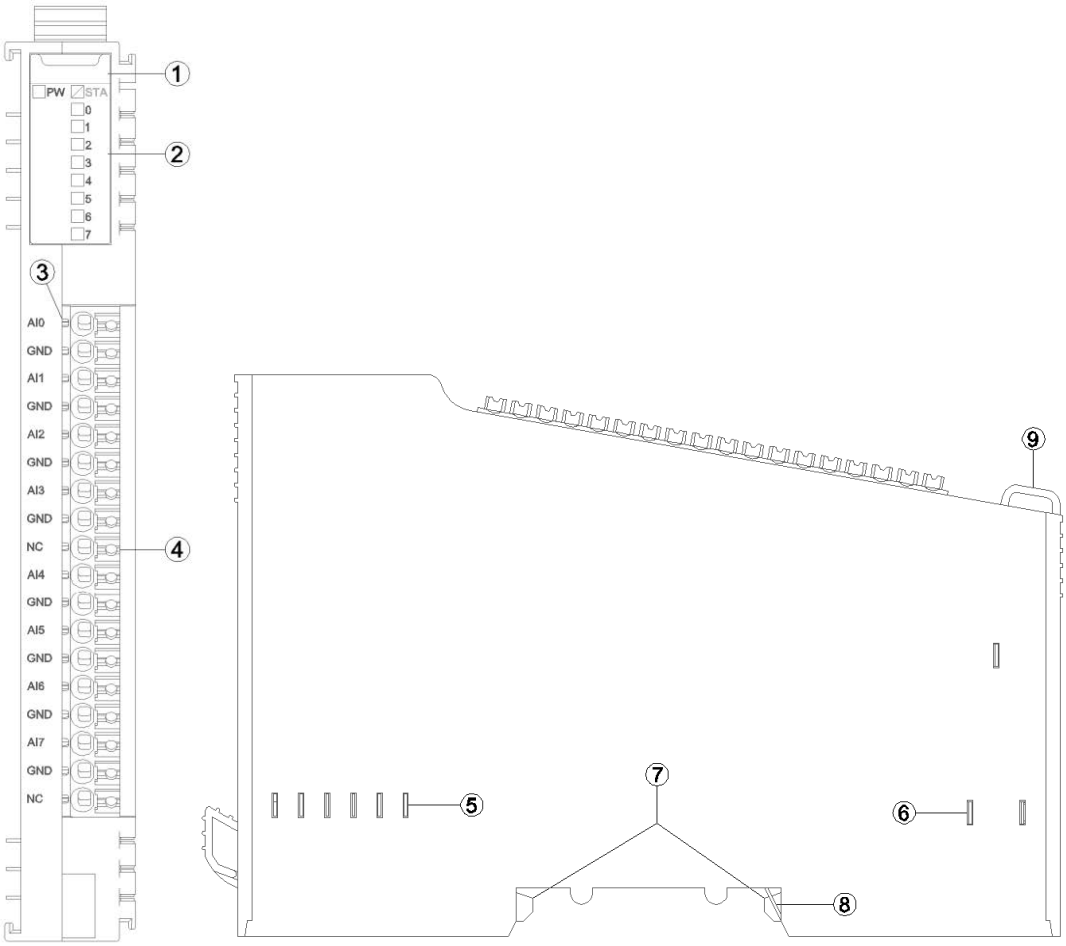

① Module Type

② State indicator

③ N/A

④ Wiring Terminal and identification

⑤ Internal Bus

⑥ Field Power

⑦ Buckle

⑧ Grounding Spring Sheet

⑨ Fixed Wiring Harness

3.1 LEDLED indicator definition

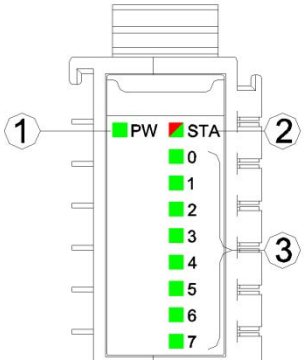

① Power LED indicator (green)

② Module State LED indicator (red/green)

③ Input channel LED indicator (green)

PW POWER STATE (GREEN)	Definition
ON	Internal bus Power Normal
OFF	Internal bus Power Failure
STA MODULE STATE (RED/GREEN)	Definition
Green slow flash (2.5Hz)	Module internal bus is not started
Red slow flash (2.5Hz)	Module internal bus offline
ON (GREEN)	Operation normal
Flash(2.5Hz) (RED/GREEN)	Upgrading mode
Flash(10Hz) (RED/GREEN)	Firmware Update
Double Flash (RED)	Module Exception has been soft-restarted
0-7 channel LED indicator (GREEN)	Definition
ON	The input signal exceeds 1% of the range
OFF	Invalid input signal

3.2 Terminal definition

Terminal Number	Definition	Description
1	AI0	Signal Input CH0
2	GND	
3	AI1	Signal Input CH1
4	GND	
5	AI2	Signal Input CH2
6	GND	
7	AI3	Signal Input CH3
8	GND	
9	NC	Not Connected
10	AI4	Signal Input CH4
11	GND	
12	AI5	Signal Input CH5
13	GND	
14	AI6	Signal Input CH6
15	GND	
16	AI7	Signal Input CH7
17	GND	
18	NC	Not Connected

It is recommended to use cables with cores smaller than 1mm².

The cold-pressed terminal parameters are as follows:

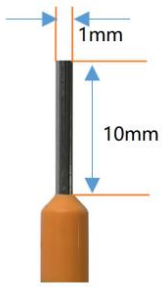

4 Wiring

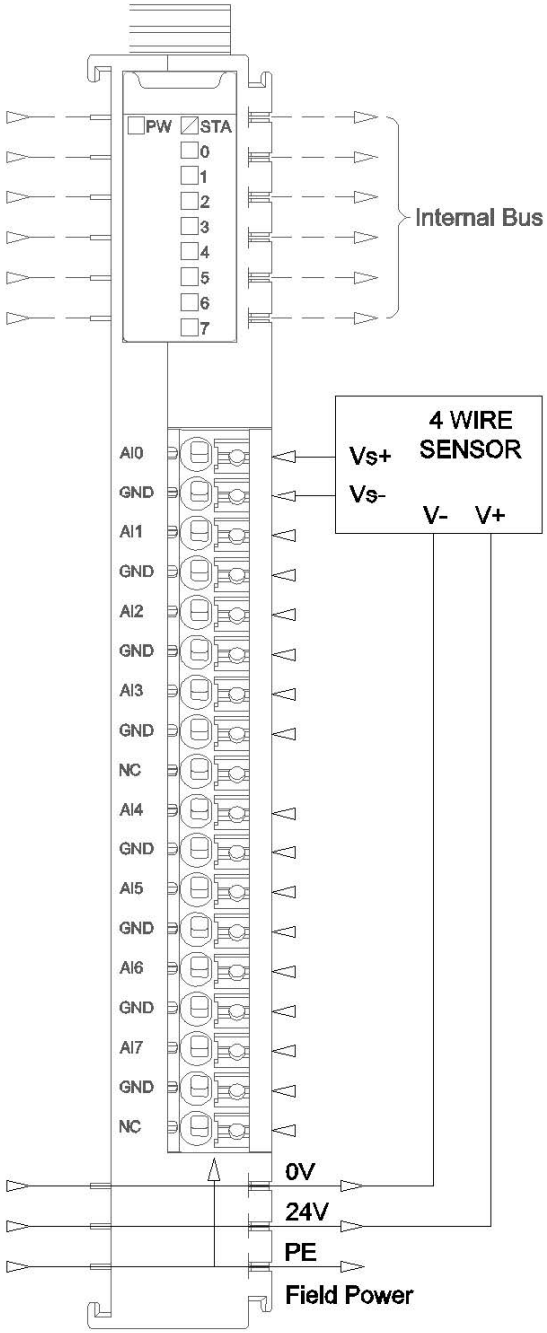
PW
STA
0
1
2
3
4
5
6
7
Internal Bus
4 WIRE SENSOR
Vs+
Vs-
V-
V+
AI0
GND
AI1
GND
AI2
GND
AI3
GND
NC
AI4
GND
AI5
GND
AI6
GND
AI7
GND
NC
0V
24V
PE
Field Power

5 Process data definition

Input Data								
Bit No	Bit 7	Bit 6	Bit 5	Bit 4	Bit 3	Bit 2	Bit 1	Bit 0
Byte 0	Analog Input Data (CH 0)							
Byte 1								
Byte 2	Analog Input Data (CH 1)							
Byte 3								
Byte 4	Analog Input Data (CH 2)							
Byte 5								
Byte 6	Analog Input Data (CH 3)							
Byte 7								
Byte 8	Analog Input Data (CH 4)							
Byte 9								
Byte 10	Analog Input Data (CH 5)							
Byte 11								
Byte 12	Analog Input Data (CH 6)							
Byte 13								
Byte 14	Analog Input Data (CH 7)							
Byte 15								

Data description：

Analog Input Data (CH0-7)：Voltage input data value

Process Data Definition (8AI)					
Voltage(0-5 V)	Voltage (0-10V)	Voltage (±5V)	Voltage (±10V)	Decimal	Hex
5	10	5	10	4095	0x0FFF
.	.	.	.	.	.
.	.	.	.	.	.
2.5	5	2.5	5	2047	0x07FF
.	.	.	.	.	.
.	.	.	.	.	.
0	0	0	0	0	0x0000
/	/	.	.	.	.
/	/	.	.	.	.
/	/	-2.5	-5	-2047	0xF801
/	/	.	.	.	.
/	/	.	.	.	.
/	/	-5	-10	-4095	0xF001

6 Configuration parameters definition

Configuration Parameters								
Bit No	Bit 7	Bit 6	Bit 5	Bit 4	Bit 3	Bit 2	Bit 1	Bit 0
Byte 0	Reserved							16Bit Data Format
Byte 1	Voltage Type (CH 0)	Voltage Type (CH 1)	Voltage Type (CH 2)	Voltage Type (CH 3)	Voltage Type (CH 4)	Voltage Type (CH 5)	Voltage Type (CH 6)	Voltage Type (CH 7)

Data description：

16Bit Data Format： Sequence of 16-bit data byte transmission (Default:0)

0：A_B。

1：B_A。

Voltage Type(CH 0-7)： Input voltage type (Default:2)

0：0~5Vdc。

1：-5~5Vdc。

2：0~10Vdc。

3：-10~10Vdc。

A Dimension drawing

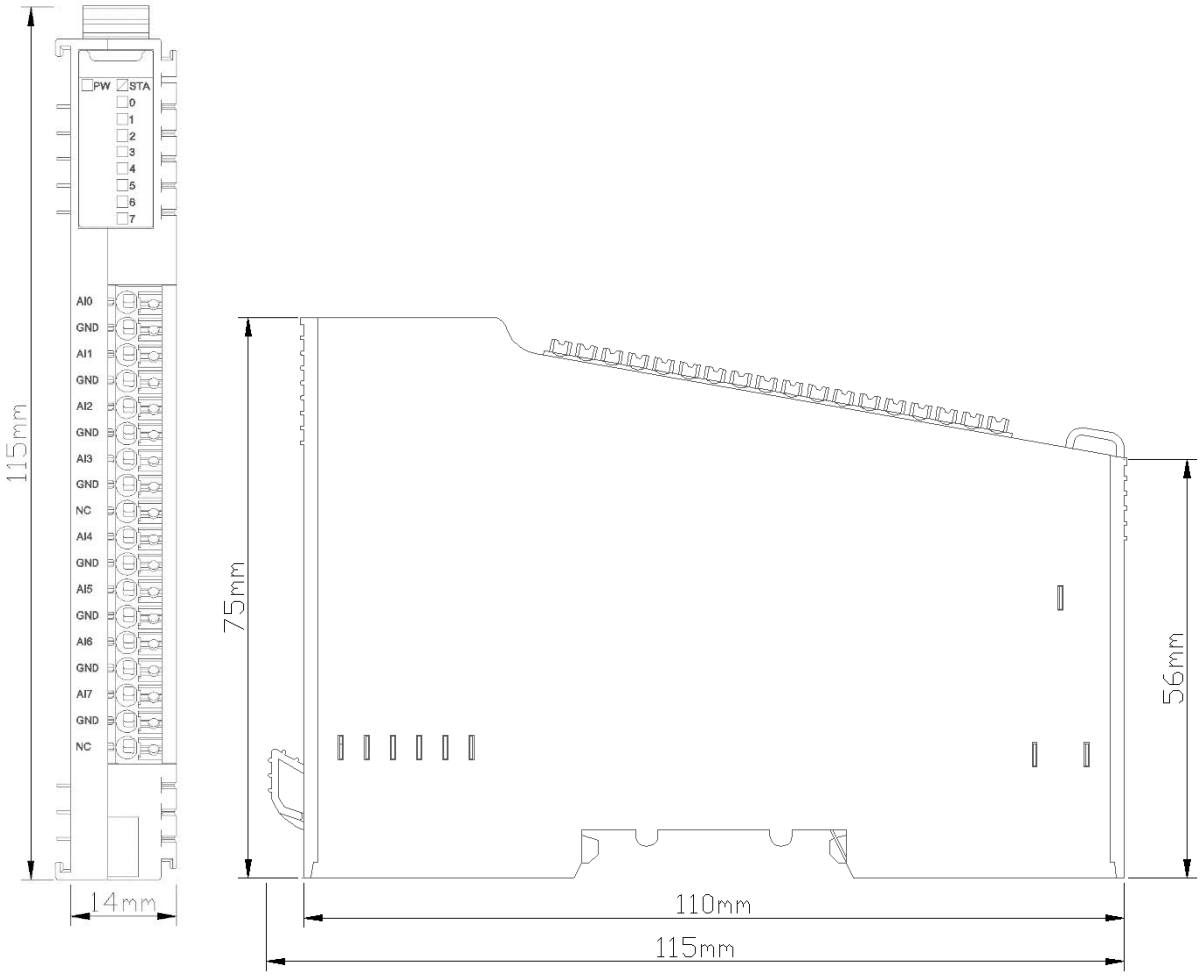

NT-3168 8 channels voltage Input

0~5/0~10/±5/±10VDC, 15Bit/16 Bit

1 Module features

- the module supports 8 channels of voltage signal input
- the module could collect 0~5VDC, 0~10VDC, ±5VDC, ±10VDC, with a 15-bit or 16-bit resolution
- the module carries with 8 analog input channel LED indicator
- the module input signal is a single ended common grounding input
- filter time could be set
- channels could be disabled independently

2 Technical Parameters

General parameters	
Power	Max.100mA@5.0Vdc
Isolation	I/O to internal bus: opto-couple isolation (3KVrms)
Field Power	Not used
Wiring	Max.1.0mm² (AWG 17)
Mounting Type	35mmDIN-Rail
Size	115*14*75mm
Weight	65g
Environment Specification	
Operational Temperature	-40~85℃
Operational Humidity	5%~95% RH (No Condensation)
Ingress Protection Rating	IP20
Input Parameter	
Channel Number	8 channel voltage input
LED Indicator	8 channel input indicators
Input Voltage Range	0~5VDC、0~10VDC、±5VDC、±10VDC
Resolution	15Bit/16Bit
Accuracy	±0.3%@25℃ ±0.5%@-40~85℃
Sampling Speed	1ms/8 channels
Output Impedance	1MΩ
Common Terminal	Common Grounding Input

3 Hardware Interface

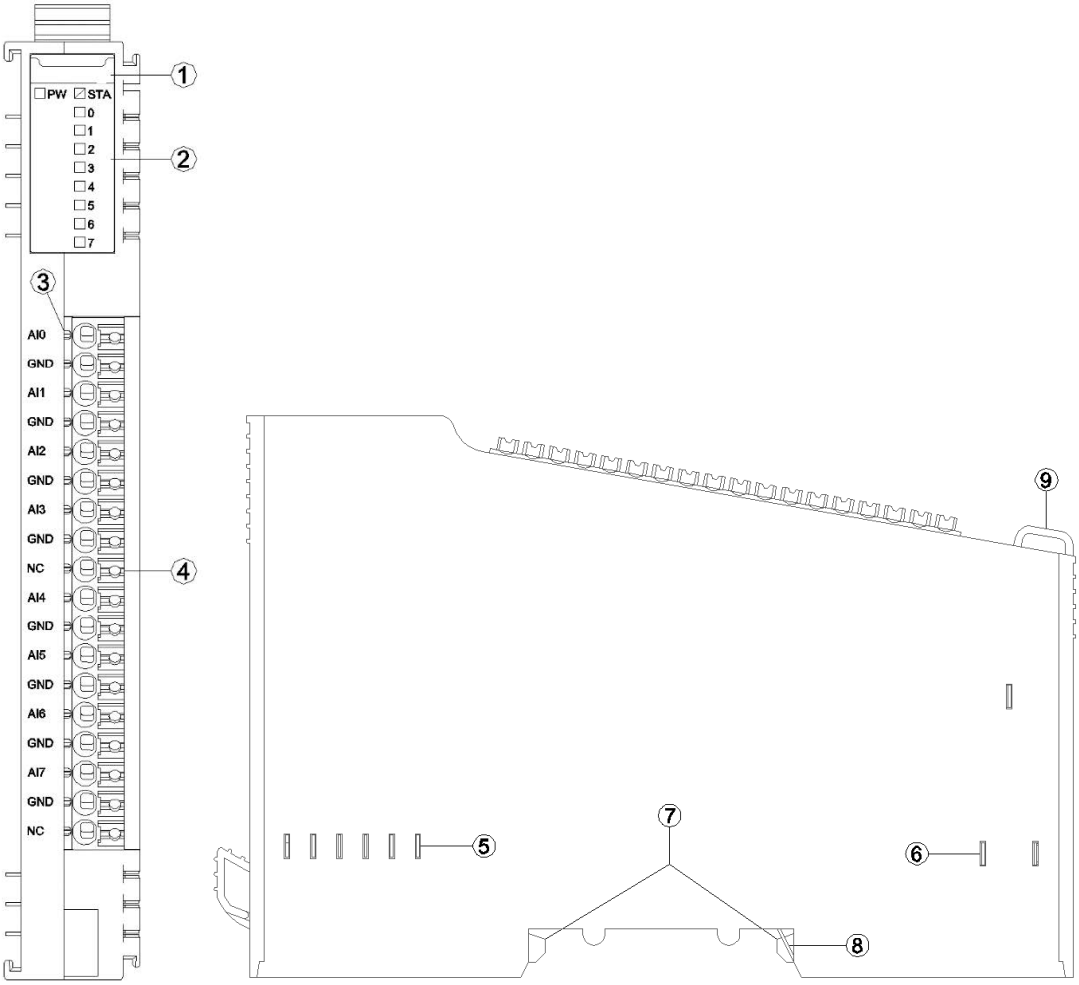

① Module Type

② State indicator

③ N/A

④ Wiring Terminal and identification

⑤ Internal Bus

⑥ Field Power

⑦ Buckle

⑧ Grounding Spring Sheet

⑨ Fixed Wiring Harness

3.1 LED indicator definition

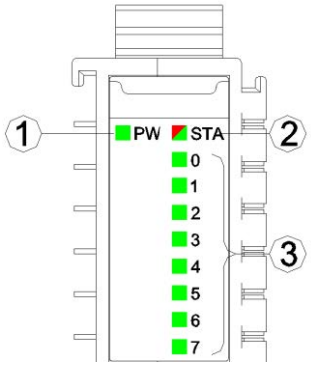

① Power LED indicator (green)

② Module State LED indicator (red/green)

③ Intput channel LED indicator (green)

PW POWER STATE (GREEN)	Definition
ON	Internal bus Power Normal
OFF	Internal bus Power Failure
STA MODULE STATE (RED/GREEN)	Definition
Green slow flash (2.5Hz)	Module internal bus is not started
Red slow flash (2.5Hz)	Module internal bus offline
ON (GREEN)	Operation normal
Flash(2.5Hz) (RED/GREEN)	Upgrading mode
Flash(10Hz) (RED/GREEN)	Firmware Update
Double Flash (RED)	Module Exception has been soft-restarted
0-7 channel LED indicator (GREEN)	Definition
ON	Input signal exceeds 0.15V or -0.15V
OFF	Invalid input signal

3.2 Terminal definition

Terminal Number	Definition	Description
1	AI0	Signal Input CH0
2	GND	
3	AI1	Signal Input CH1
4	GND	
5	AI2	Signal Input CH2
6	GND	
7	AI3	Signal Input CH3
8	GND	
9	NC	Not Connected
10	AI4	Signal Input CH4
11	GND	
12	AI5	Signal Input CH5
13	GND	
14	AI6	Signal Input CH6
15	GND	
16	AI7	Signal Input CH7
17	GND	
18	NC	Not Connected

It is recommended to use cables with cores smaller than 1mm².

The cold-pressed terminal parameters are as follows:

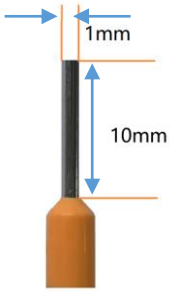

4 Wiring

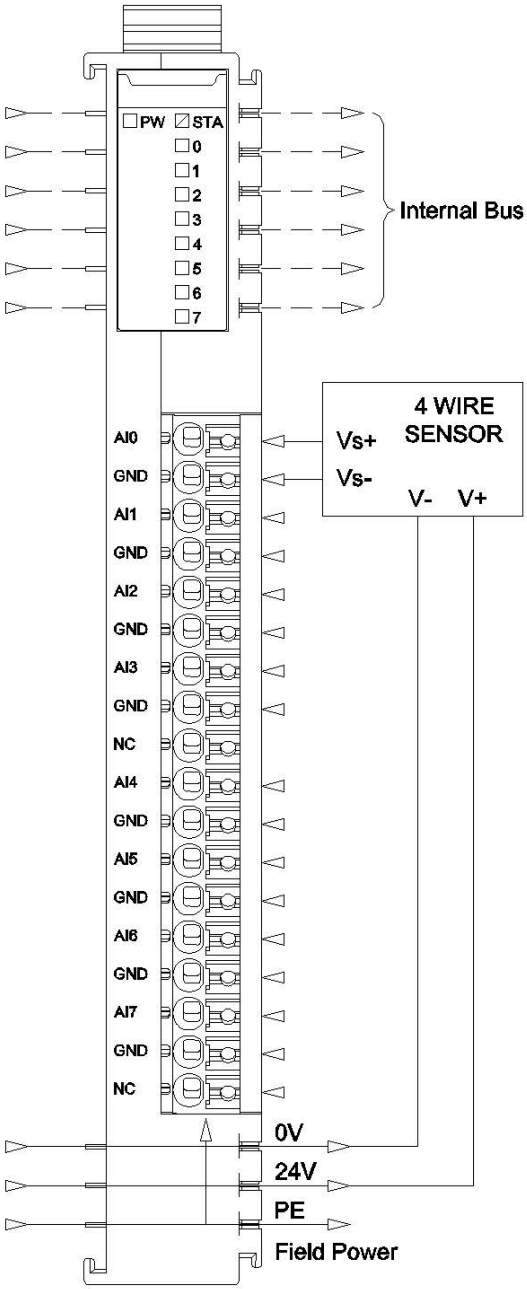
PW
STA
0
1
2
3
4
5
6
7
Internal Bus
4 WIRE SENSOR
Vs+
Vs-
V-
V+
AI0
GND
AI1
GND
AI2
GND
AI3
GND
NC
AI4
GND
AI5
GND
AI6
GND
AI7
GND
NC
0V
24V
PE
Field Power

5 Process data definition

Input Data								
Bit No	Bit 7	Bit 6	Bit 5	Bit 4	Bit 3	Bit 2	Bit 1	Bit 0
Byte 0	Analog Input Data (CH 0)							
Byte 1								
Byte 2	Analog Input Data (CH 1)							
Byte 3								
Byte 4	Analog Input Data (CH 2)							
Byte 5								
Byte 6	Analog Input Data (CH 3)							
Byte 7								
Byte 8	Analog Input Data (CH 4)							
Byte 9								
Byte 10	Analog Input Data (CH 5)							
Byte 11								
Byte 12	Analog Input Data (CH 6)							
Byte 13								
Byte 14	Analog Input Data (CH 7)							
Byte 15								

5.1 Process data definition（standard mode）

Data description：

Analog Input Data (CH0-7)：Voltage input data value

Process data definition (8AI)						
Voltage (0-5V)	Voltage (0-10V)	Voltage (±5V)	Voltage (±10V)	Decimal	Hex	Range
>5.06	>10.12	>5.06	>10.12	32767	0x7FFF	Overflow
5.06	10.12	5.06	10.12	27979	0x6D4B	Exceeds the upper limit
5V+0.1808mv	10V+0.3617mv	5V+0.1808mv	10V+0.3617mv	27649	0x6C01	
5	10	5	10	27648	0x6C00	Rated range
.	.	.	.	.	.	
.	.	.	.	.	.	
2.5	5	2.5	5	13824	0x3600	
.	.	.	.	.	.	
.	.	.	.	.	.	
0	0	0	0	0	0x0000	
/	/	.	.	.	.	
/	/	.	.	.	.	
/	/	-2.5	-5	-13824	0XCA00	
/	/	.	.	.	.	
/	/	.	.	.	.	
/	/	-5	-10	-27648	0x9400	
/	/	-5V-0.1808mv	-10V-0.3617mv	-27649	0x93FF	Exceeds the lower limit
/	/	-5.06	-10.12	-27979	0x92B5	
/	/	-5.06<	-10.12<	-32768	0x8000	Underflow

5.2 Process data definition（special mode）

Process data definition (8AI)					
Voltage (0-5V)	Voltage (0-10V)	Voltage (±5V)	Voltage (±10V)	Decimal	Hex
5	10	5	10	32767	0x7FFF
.	.	.	.	.	.
.	.	.	.	.	.
2.5	5	2.5	5	16383	0x3FFF
.	.	.	.	.	.
.	.	.	.	.	.
0	0	0	0	0	0x0000
/	/	.	.	.	.
/	/	.	.	.	.
/	/	-2.5	-5	-16384	0xC000
/	/	.	.	.	.
/	/	.	.	.	.
/	/	-5	-10	-32768	0x8000

6 Configuration parameters definition

Configuration Parameters								
Bit No	Bit 7	Bit 6	Bit 5	Bit 4	Bit 3	Bit 2	Bit 1	Bit 0
Byte 0	Reserved						Range_ Mode	16Bit Data Format
Byte 1	Voltage Type (CH 1)				Voltage Type (CH 0)			
Byte 2	Voltage Type (CH 3)				Voltage Type (CH 2)			
Byte 3	Voltage Type (CH 5)				Voltage Type (CH 4)			
Byte 4	Voltage Type (CH 7)				Voltage Type (CH 6)			
Byte 5	Filtering Time (CH0)							
Byte 6								
Byte 7	Filtering Time (CH1)							
Byte 8								
Byte 9	Filtering Time (CH2)							
Byte 10								
Byte 11	Filtering Time (CH3)							
Byte 12								
Byte 13	Filtering Time (CH4)							
Byte 14								
Byte 15	Filtering Time (CH5)							
Byte 16								
Byte 17	Filtering Time (CH6)							
Byte 18								
Byte 19	Filtering Time (CH7)							
Byte 20								
Byte 21 … Byte 29	Reserved							

Data description：

16Bit Data Format： Sequence of 16-bit data byte transmission (Default:0)

0：A_B。

1：B_A。

Range_Mode： Process data mode (default: standard mode)

Standard mode: same with Siemens process data definition

Special mode: max range of the hardware

Voltage Type(CH 0-7)： Input voltage type (Default:3)

0：disabled

1：0~5Vdc

2：-5~5Vdc

3：0~10Vdc

4：-10~10Vdc

Filtering Time(CH0-CH7)： The input filtering time of the channel, in ms. (Default：10)

A Dimension drawing

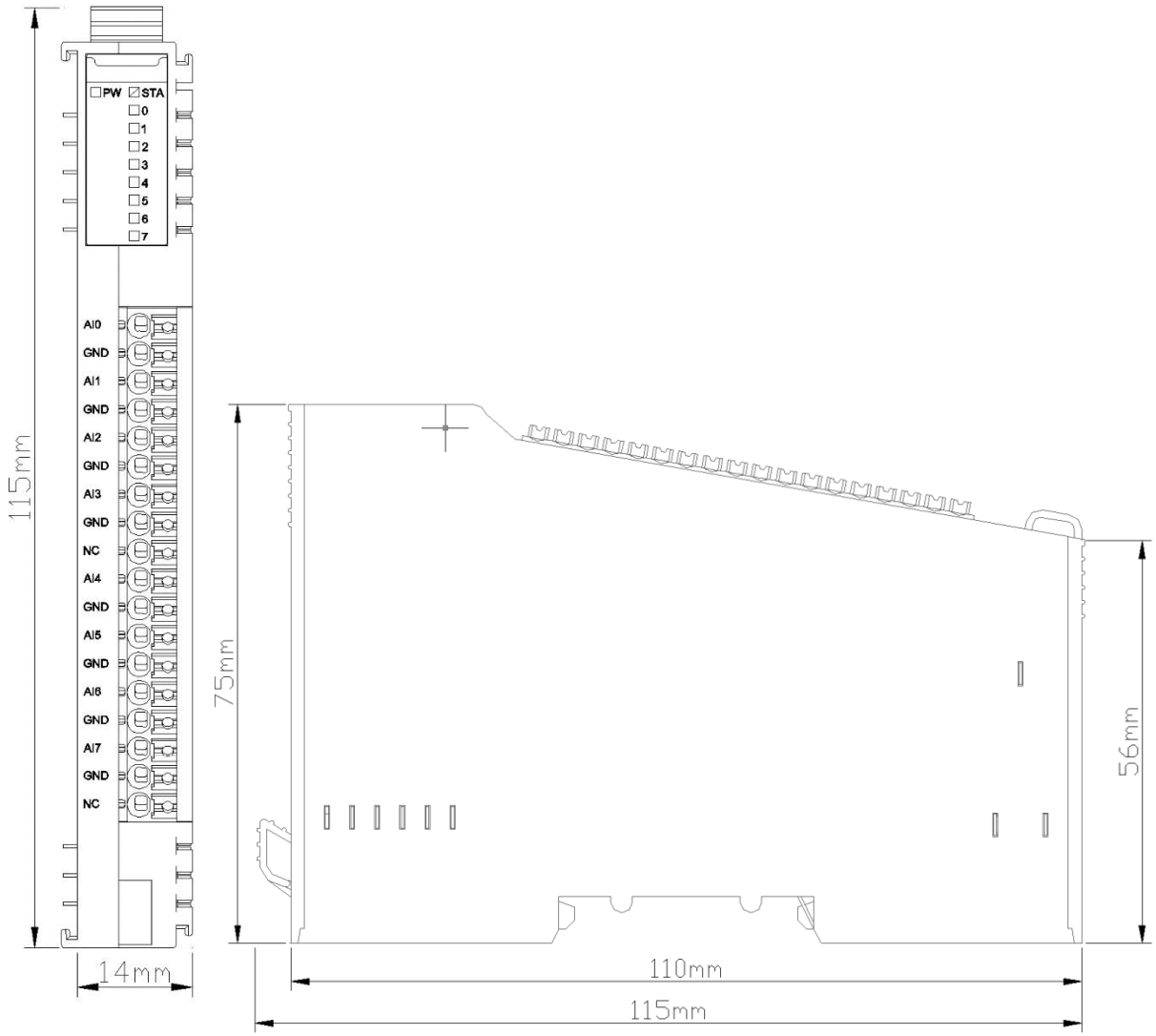

NT-3234 4 channels analog input /0&4-20mA/15-bit single-ended

1 Module features

◆ The module supports 4-channel current signal acquisition.

◆ The module can be configured for 0-20mA or 4-20mA current signal acquisition.

◆ The module supports 2-wire (non-loop output, external power supply is required) or 4-wire current sensor input.

◆ The internal bus of the module and field input adopts magnetic insulation.

◆ The module input channel is connected to the field active analog signal current output sensor.

◆ The module channel equips with TVS overvoltage protection.

2 Technical parameters

General parameters	
Power	Max.65mA@5.0Vdc
Isolation	I/O to internal bus: magnetic isolation (2.5KVrms) Power isolation: DC-DC
Wiring	Max.1.0mm² (AWG 17)
Installation	35mm DIN-Rail
Size	115*14*75mm
Weight	65g
Environmental parameters	
Working temperature	-40~85℃
Environmental humidity	5%-95% (No Condensation)
Ingress Protection Rating	IP20
Input parameters	
Channel Number	4 channels
LED Indicator	4 LED channel state indicators
Input range	Maximum: 0 ~ 23.5 mA
Resolution ratio	15 Bits
Acquisition precision	±0.3% full range, @25℃
	±0.5% full range, @-20~70℃
Sampling rate	6ms / 4 channels (filter level 0)
Data format	16-bit signed integer

3 Hardware interface

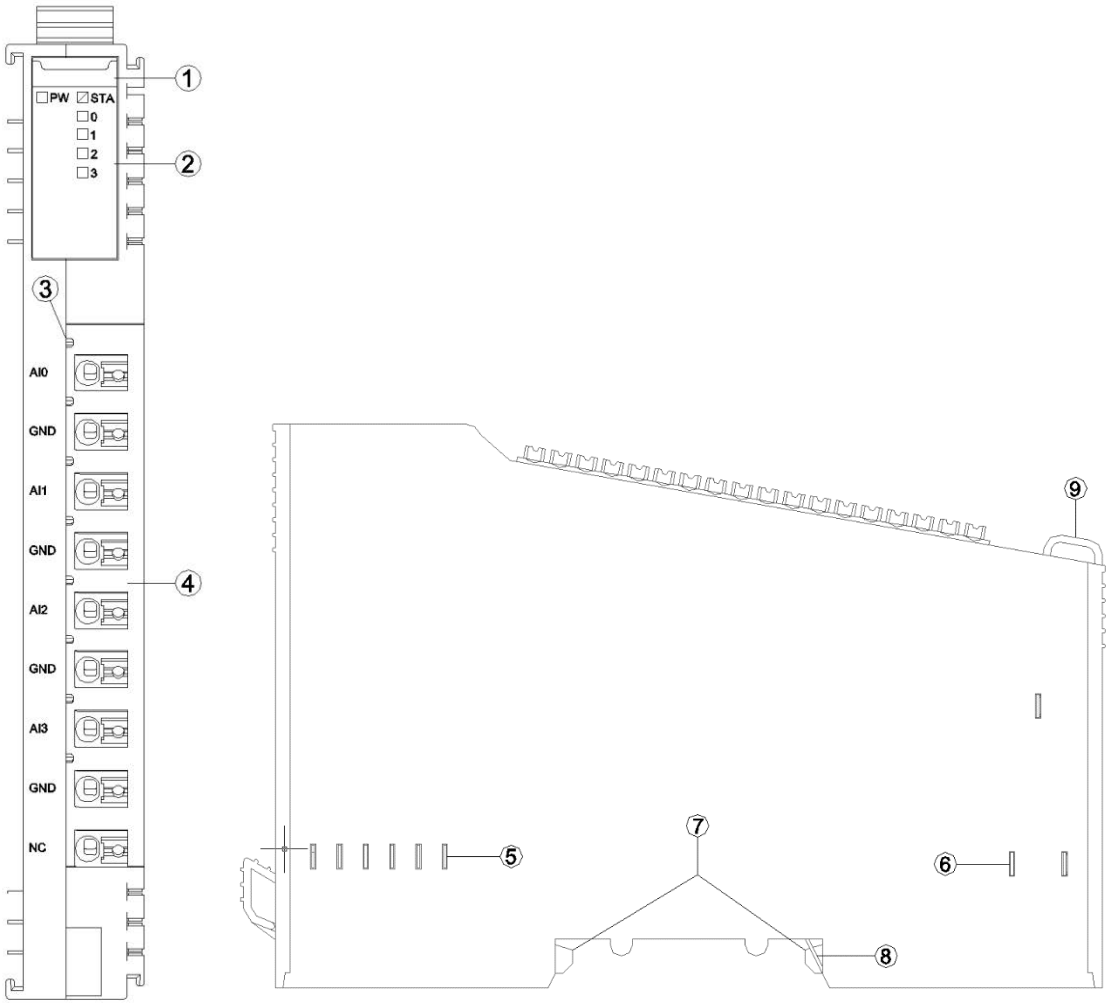

① Module Type

② State indicator

③ (No field channel indicator)

④ Wiring Terminal and Identification

⑤ Internal Bus

⑥ Field Power

⑦ Buckle

⑧ Grounding Spring Sheet

⑨ Fixed Wiring Harness

3.1 LED indicator definition

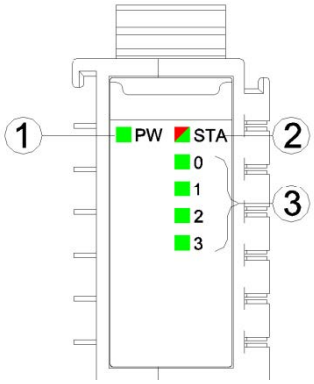

① Power indicator light (green)

② Module State indicator (red/green)

③ Input channel indicator light (green)

PW power indicator	Definition
ON	Internal bus power supply is normal
OFF	Internal bus power supply is failure
STA module State indicator	Definition
Green slow flash (2.5hz)	The internal bus of the module is not started
Red slow flash (2.5hz)	Module internal bus offline
Green on	Operation normal
Flash(2.5Hz) (RED/GREEN)	Upgrading mode
Flash(10Hz) (RED/GREEN)	Firmware upgrading
Red flashes twice	Module exception has been soft-restarted
0-3 channel indicator light	Definition
ON	Input signal >=1% range
OFF	Input signal <1% range

3. 2 Terminal definition

Terminal number	Definition	Description
1	AI0	Current input CH0
2	GND	
3	AI1	Current input CH1
4	GND	
5	AI2	Current input CH2
6	GND	
7	AI3	Current input CH3
8	GND	
9	NC	Not connected

It is recommended to use cables with cores greater than 0.2mm² and smaller than 1mm².

When connecting cables (terminals)with cores, need to check and connect them according to the corresponding node serial number.

The cold-pressed terminal parameters are as follows:

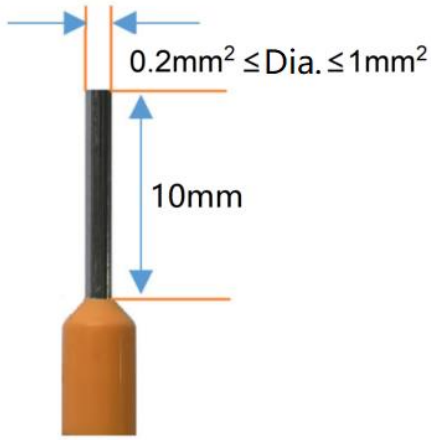

4 Wiring

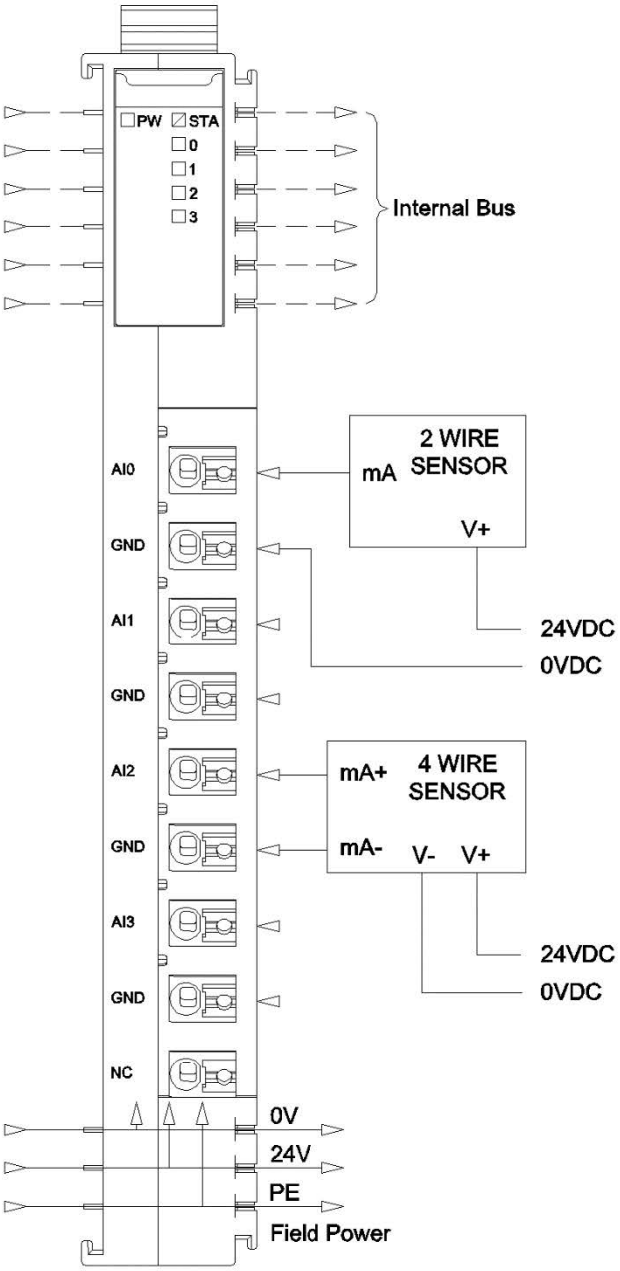
PW
STA
0
1
2
3
Internal Bus
AI0
GND
AI1
GND
AI2
GND
AI3
GND
NC
2 WIRE SENSOR
mA
V+
24VDC
0VDC
4 WIRE SENSOR
mA+
mA-
V-
V+
24VDC
0VDC
0V
24V
PE
Field Power

5 Process data definition

Input data								
Bit No	Bit 7	Bit 6	Bit 5	Bit 4	Bit 3	Bit 2	Bit 1	Bit 0
Byte 0	Analog Input Data (CH 0)							
Byte 1								
Byte 2	Analog Input Data (CH 1)							
Byte 3								
Byte 4	Analog Input Data (CH 2)							
Byte 5								
Byte 6	Analog Input Data (CH 3)							
Byte 7								

Data description ：

Analog Input Data (CH0-3)：Analog signal Input value of corresponding channel.

Analog Input Data (NT-3238)				
Current (0-20mA)	Current (4-20mA)	Decimal	Hexadecimal	Location
>23.515	>22.810	32767	7FFF	Overflow
23.515	22.81	32511	7EFF	Exceed the upper limit
.	.	.	.	
.	.	.	.	
20.0007	20.0005	27649	6C01	
20	20	27648	6C00	Rated range
.	.	.	.	
.	.	.	.	
0	4	0	0000	
<0.0	3.9995	-1	FFFF	Exceed the lower limit
	.	.	.	
	.	.	.	
	1.1852	-4864	ED00	
	<1.1852	-32768	8000	Underflow

Note: ADC chip fault process data is 32765, disable channel upload process data is -32367

6 Configuration parameter definition

Configuration parameters								
Bit No	Bit 7	Bit 6	Bit 5	Bit 4	Bit 3	Bit 2	Bit 1	Bit 0
Byte 0	Reserved							16Bit Data Format
Byte 1	Reserved				Channel Enable Ch#3	Channel Enable Ch#2	Channel Enable Ch#1	Channel Enable Ch#0
Byte 2	Reserved				Current Type Ch#3	Current Type Ch#2	Current Type Ch#1	Current Type Ch#0
Byte 3	Ch#0 Filter Level							
Byte 4	Ch#1 Filter Level							
Byte 5	Ch#2 Filter Level							
Byte 6	Ch#3 Filter Level							
Byte 7 … Byte 10	Reserved							

Data description:

16Bit Data Format：Analog data storage format (default: 0).

0：A-B

1：B-A

Channel Enable Ch#(0-3)：Type of channel enable (default: 1).

0：Disable

1：Enable

Current Type Ch#(0-3)：Type of input signal (default: 1).

0：0-20mA

1：4-20mA

Filter Level Ch#(0-3)：Filter level (default：0).

0：level 0

1：level 1

2：level 2

3：level 3

4：level 4

5：level 5

6：level 6

7：level 7

8：level 8

9：level 9

10：level 10

A Dimension drawing

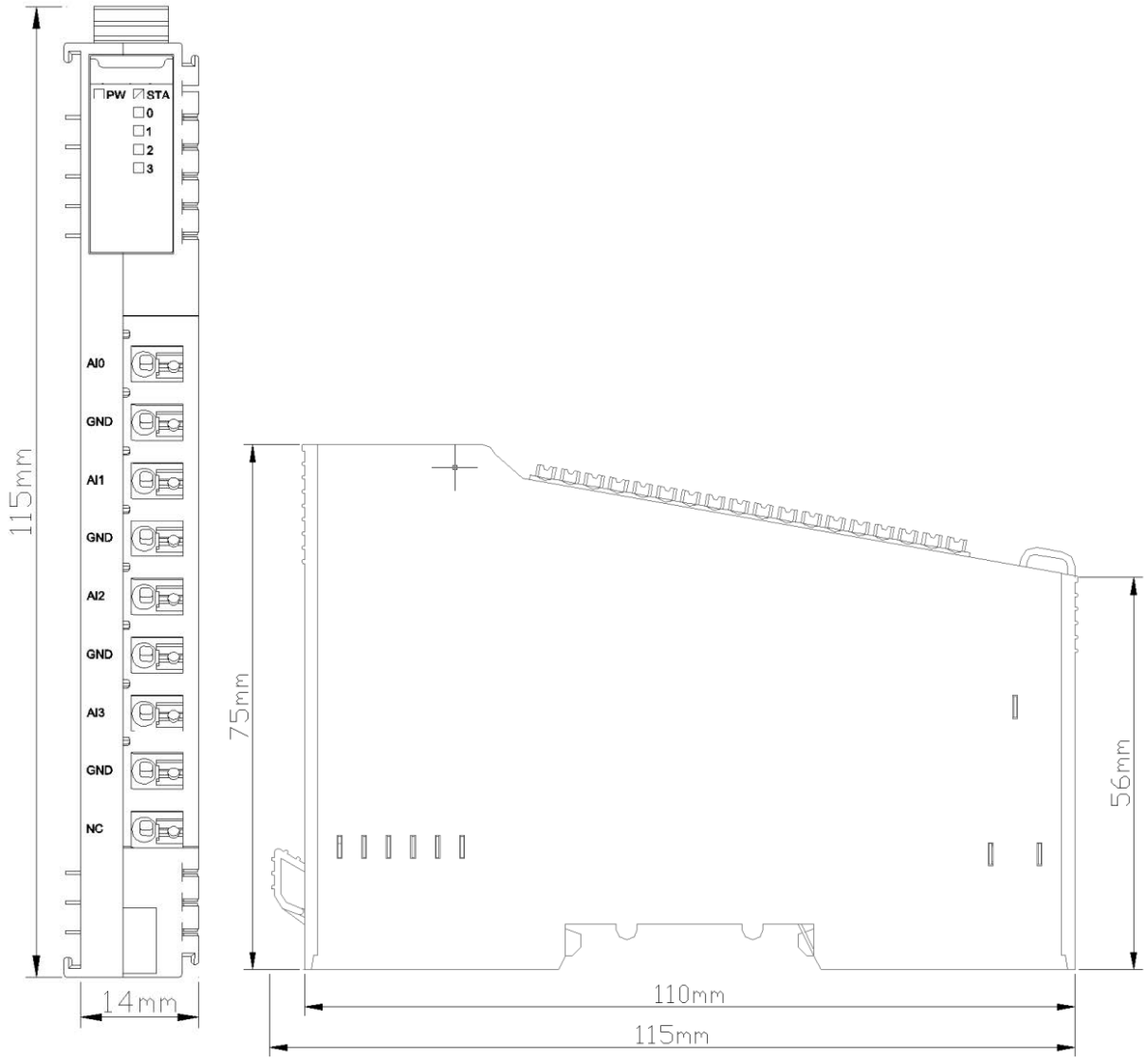

NT-3238: 8 channels analog input /0&4-20mA/15-bit single-terminal

1 Module features

◆ the module supports 8-channel current signal acquisition.

◆ the module can be configured for 0-20mA or 4-20mA current signal acquisition.

◆ the module supports 2-wire (non-loop output, external power supply is required) or 4-wire current sensor input.

◆ the internal bus of the module and field input adopts magnetic insulation.

◆ the module input channel is connected to the field active analog signal current output sensor.

◆ the module channel equips with TVS overvoltage protection.

2 Technical parameters

General parameters	
Power	Max.65mA@5.0Vdc
Isolation	I/O to internal bus: magnetic isolation (2.5KVrms) Power isolation: DC-DC
Wiring	Max.1.0mm² (AWG 17)
Installation	35mm DIN-Rail
Size	115*14*75mm
Weight	65g
Environmental parameters	
Working temperature	-40~85℃
Environmental humidity	5%-95% (No Condensation)
Ingress Protection Rating	IP20
Input parameters	
Channel Number	8 channels
LED Indicator	8 LED channel state indicators
Input range	Maximum: 0 ~ 23.5 mA
Resolution ratio	15 Bit
Acquisition precision	±0.3% full range, @25℃
	±0.5% full range, @-20~70℃
Sampling rate	28 ms / 8 channels
Data format	16-bit signed integer

3 Hardware interfaces

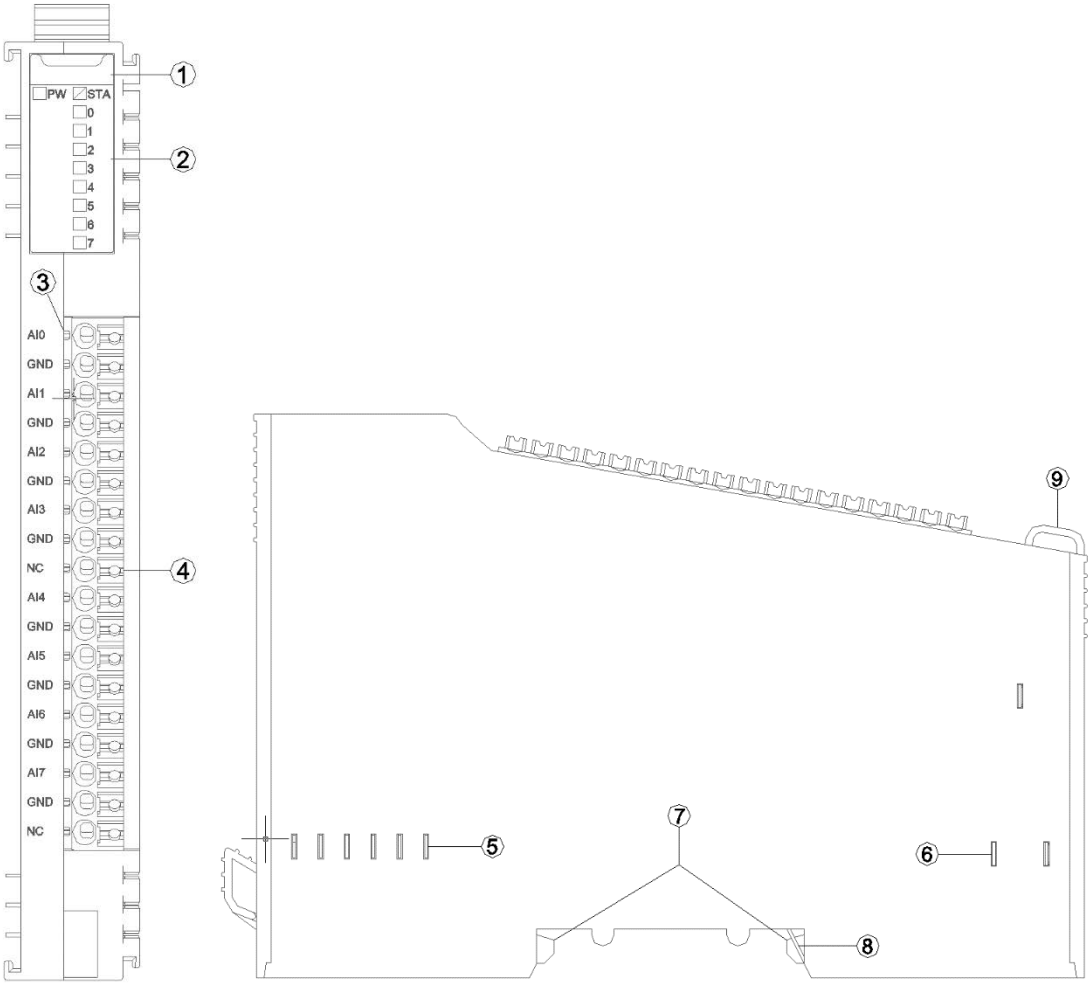

⑩ Module Type

⑪ State indicator

⑫ (No field channel indicator)

⑬ Wiring Terminal and marking

⑭ Internal Bus

⑮ Field Power

⑯ Buckle

⑰ Grounding Spring Sheet

⑱ Fixed Wiring Harness

3.1 LED indicator lights

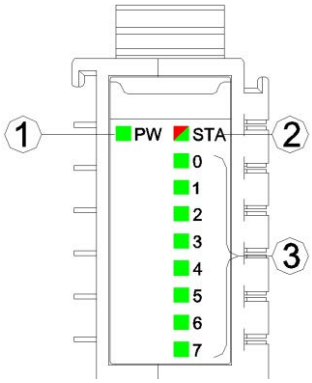

④ Power indicator light (green)

⑤ Module State indicator (red/green)

⑥ Input channel indicator light (green)

PW power indicator	Definition
ON	Internal bus power supply is normal
OFF	Internal bus power supply is failure
STA module State indicator	Definition
Green slow flash (2.5hz)	The internal bus of the module is not started
Red slow flash (2.5hz)	Module internal bus offline
Green on	Operation normal
Flash(2.5Hz) (RED/GREEN)	Upgrading mode
Flash(10Hz) (RED/GREEN)	Firmware upgrading
Red flashes twice	Module exception has been soft-restarted
0-7 channel indicator light	Definition
ON	Input signal >=1% range
OFF	Input signal <1% range

3.2 Terminal definition

Terminal number	Definition	Description
1	AI0	Current input CH0
2	GND	
3	AI1	Current input CH1
4	GND	
5	AI2	Current input CH2
6	GND	
7	AI3	Current input CH3
8	GND	
9	NC	Not connected
10	AI4	Current input CH4
11	GND	
12	AI5	Current input CH5
13	GND	
14	AI6	Current input CH6
15	GND	
16	AI7	Current input CH7
17	GND	
18	NC	Not connected

It is recommended to use cables with cores smaller than 1mm².

The cold-pressed terminal parameters are as follows:

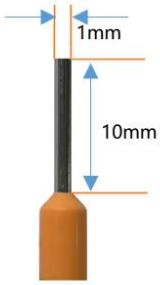

4 Wiring

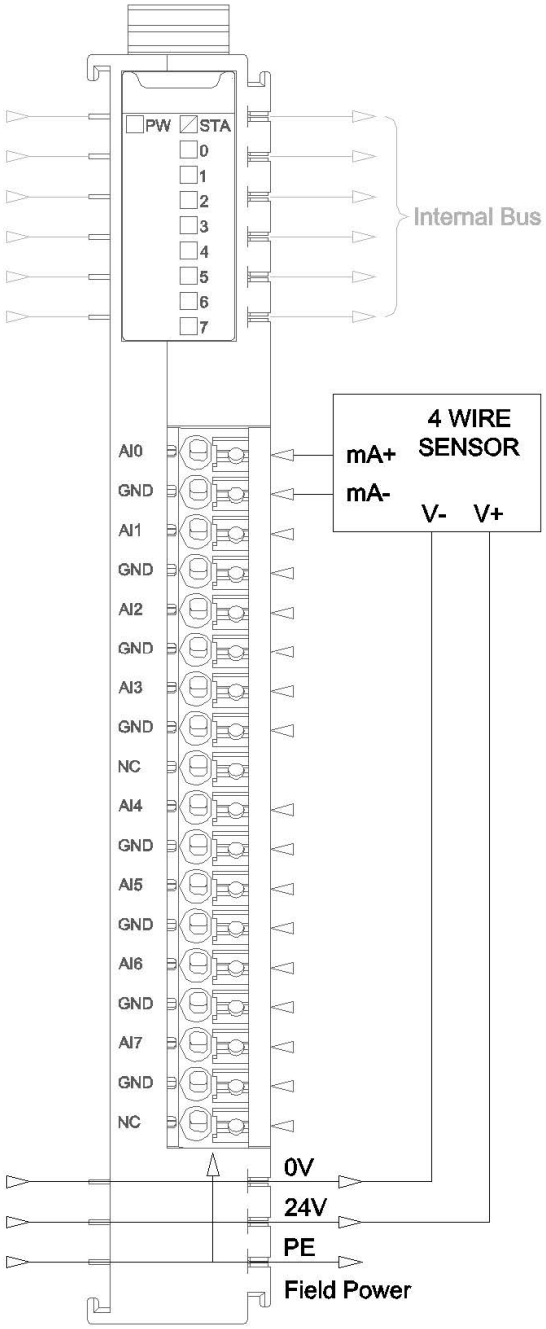
PW
STA
0
1
2
3
4
5
6
7
Internal Bus
AI0
GND
AI1
GND
AI2
GND
AI3
GND
NC
AI4
GND
AI5
GND
AI6
GND
AI7
GND
NC
4 WIRE SENSOR
mA+
mA-
V-
V+
0V
24V
PE
Field Power

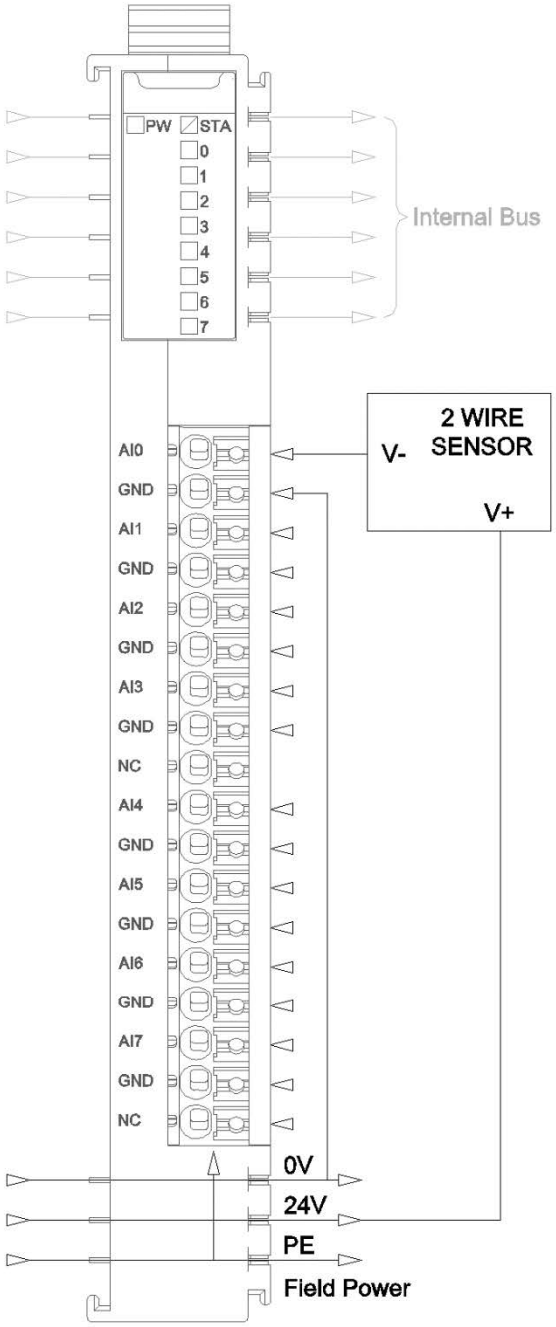
PW
STA
0
1
2
3
4
5
6
7
Internal Bus
AI0
GND
AI1
GND
AI2
GND
AI3
GND
NC
AI4
GND
AI5
GND
AI6
GND
AI7
GND
NC
2 WIRE SENSOR
V-
V+
0V
24V
PE
Field Power

5 Process data definition

Input data								
Bit No	Bit 7	Bit 6	Bit 5	Bit 4	Bit 3	Bit 2	Bit 1	Bit 0
Byte 0	Analog Input Data (CH 0)							
Byte 1								
Byte 2	Analog Input Data (CH 1)							
Byte 3								
Byte 4	Analog Input Data (CH 2)							
Byte 5								
Byte 6	Analog Input Data (CH 3)							
Byte 7								
Byte 8	Analog Input Data (CH 4)							
Byte 9								
Byte 10	Analog Input Data (CH 5)							
Byte 11								
Byte 12	Analog Input Data (CH 6)							
Byte 13								
Byte 14	Analog Input Data (CH 7)							
Byte 15								

Data description:

Analog Input Data (CH0-7): Analog signal Input value of corresponding channel.

Analog Input Data (CT-3238)				
Current (0-20mA)	Current (4-20mA)	Decimal	Hexadecimal	Location
>23.515	>22.810	32767	7FFF	Overflow
23.515	22.81	32511	7EFF	Exceed the upper limit
.	.	.	.	
.	.	.	.	
20.0007	20.0005	27649	6C01	
20	20	27648	6C00	Rated range
.	.	.	.	
.	.	.	.	
0	4	0	0000	
<0.0	3.9995	-1	FFFF	Exceed the lower limit
	.	.	.	
	.	.	.	
	1.1852	-4864	ED00	
	<1.1852	-32768	8000	Underflow

For example: AI0 input monitoring value of the NT-3238 is 16#3126=12582, if it chooses the range of 4-20mA, then the theoretical input value of AI0 is: 12582/27648*16+4=11.28125mA.

For example: AI0 input monitoring value of the NT-3238 is 16#3126=12582, if it chooses the range of 0-20mA, then the theoretical input value of AI0 is: 12582/27648*16=7.28125mA

6 Configuration parameter definition

Configuration parameters								
Bit No	Bit 7	Bit 6	Bit 5	Bit 4	Bit 3	Bit 2	Bit 1	Bit 0
Byte 0	16Bit Data Format							
Byte 1	Current Type Ch#7	Current Type Ch#6	Current Type Ch#5	Current Type Ch#4	Current Type Ch#3	Current Type Ch#2	Current Type Ch#1	Current Type Ch#0

Data description:

16Bit Data Format：Analog data storage format. (default: 0)

0：A-B

1：B-A

Current Type Ch#(0-7)：Type of input signal. (default: 1)

0：0-20mA

1：4-20mA

A Dimension drawing

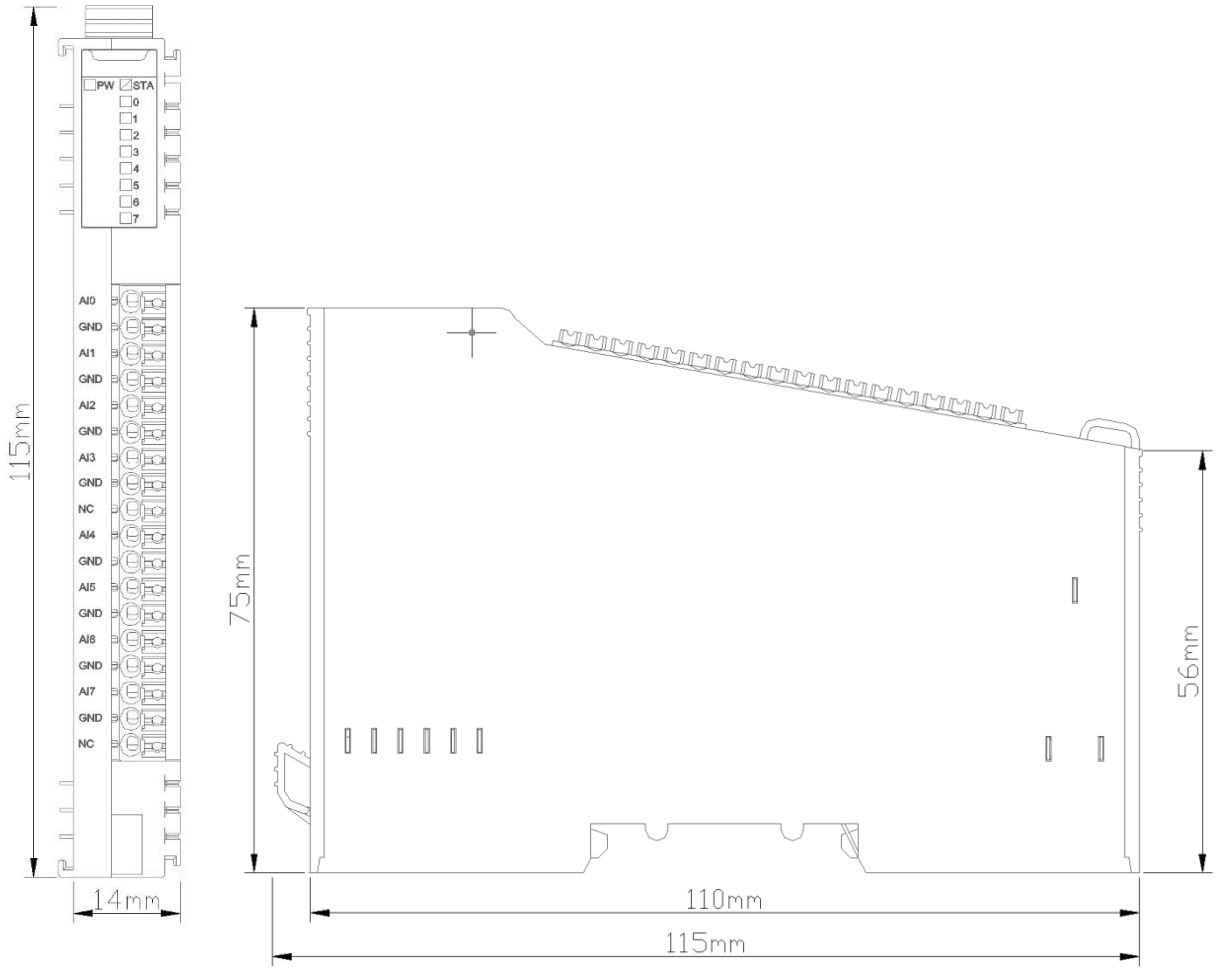

NT-3258 8 channels analog input /0～20mA OR -20~0mA OR ±20mA /12bit Single-ended bipolar

1 Module features

◆ the module supports 8-channel current signal acquisition.

◆ the module can be configured for 0~20mA OR -20~0mA OR ±20mA current signal acquisition.

◆ the module supports 2-wire (non-loop output, external power supply is required)

◆ the internal bus of the module and field input adopts magnetic insulation.

◆ the module input channel is to be connected to the field active analog signal current output sensor.

◆ the module channel equips with TVS overvoltage protection.

2 Technical parameters

General Parameters	
Power	Max.65mA@5.0Vdc
Isolation	I/O to internal bus: magnetic isolation (2.5KVrms) Power isolation: DC-DC
Wiring	Max.1.0mm² (AWG 17)
Installation	35mm DIN-Rail
Size	115*14*75mm
Weight	65g
Environmental parameters	
Working temperature	-40~85℃
Environmental humidity	5%-95% (No Condensation)
Ingress Protection Rating	IP20
Input parameters	
Channel Number	8 channels
LED Indicator	8 LED channel state indicators
Input range	Maximum: 0~24mA
Resolution ratio	12 Bit
Acquisition precision	±0.3% full range，@25℃
	±0.5% full range，@-20~70℃
Sampling rate	28ms/8 channels
Data format	16-bit signed integer

3 Hardware interfaces

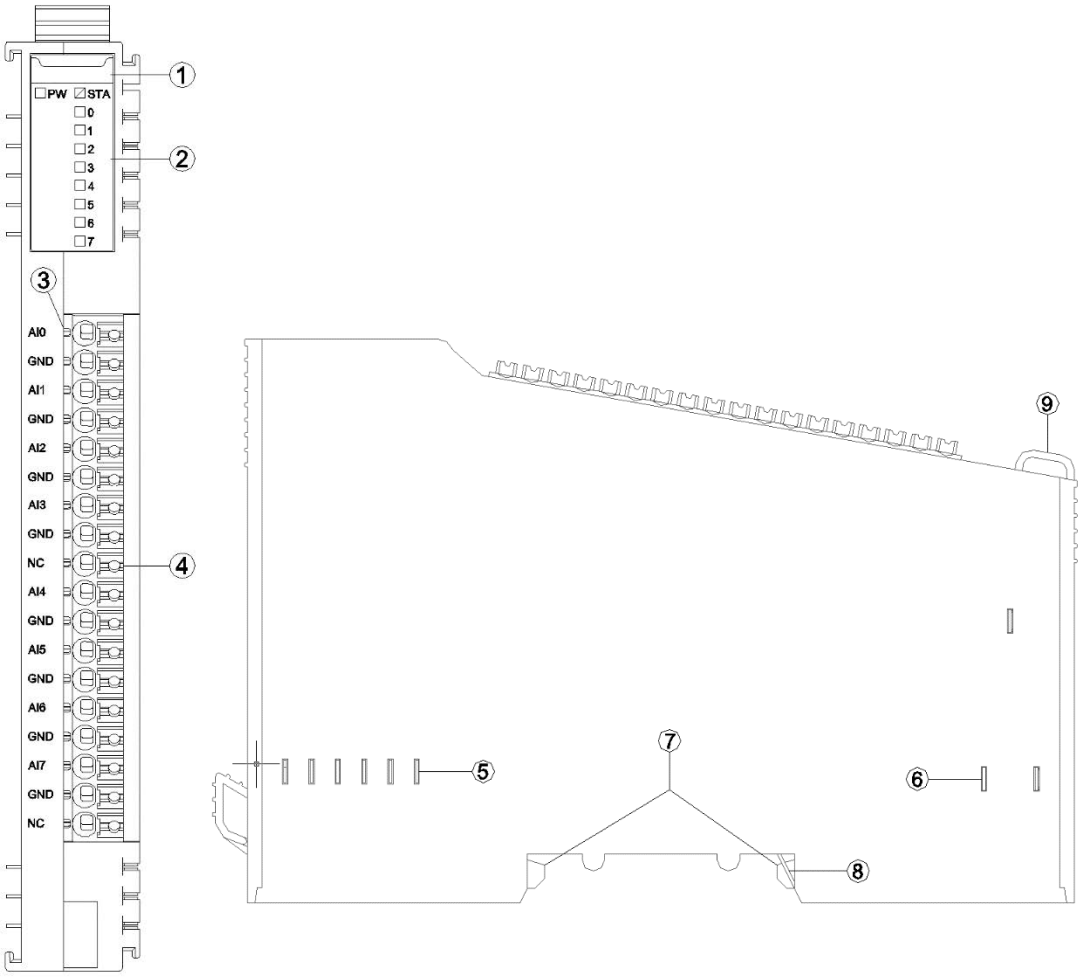

① Module Type

② State indicator

③ (non field channel indicator)

④ Wiring Terminal and marking

⑤ Internal Bus

⑥ Field Power

⑦ Buckle

⑧ Grounding Spring Sheet

⑨ Fixed Wiring Harness

3.1 LED indicator lights

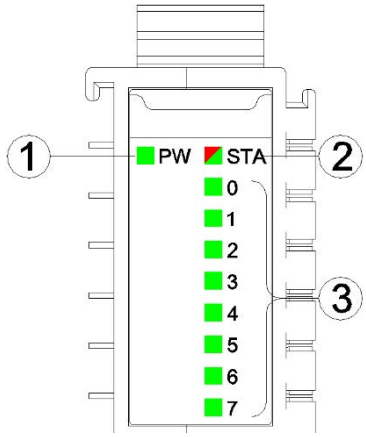

① Power indicator light (green)

② Module State indicator light (red/green)

③ Input channel indicator light (green)

PW power indicator	Definition
ON	Internal bus power supply is normal
OFF	Internal bus power supply is failure
STA module State indicator	Definition
Green slow flash (2.5hz)	The internal bus of the module is not started
Red slow flash (2.5hz)	Module internal bus offline
Green on	Operation normal
Flash(2.5Hz) (RED/GREEN)	Upgrading mode
Flash(10Hz) (RED/GREEN)	Firmware upgrading
Red flashes twice	Module exception has been soft-restarted
0-7 channel indicator light	Definition
ON	Input signal >=1% range
OFF	Input signal <1% range

3.2 Terminal definition

Terminal number	Definition	Description
1	AI0	Current input CH0
2	GND	
3	AI1	Current input CH1
4	GND	
5	AI2	Current input CH2
6	GND	
7	AI3	Current input CH3
8	GND	
9	NC	Not connected
10	AI4	Current input CH4
11	GND	
12	AI5	Current input CH5
13	GND	
14	AI6	Current input CH6
15	GND	
16	AI7	Current input CH7
17	GND	
18	NC	Not connected

It is recommended to use cables with cores smaller than 1mm².

The cold-pressed terminal parameters are as follows:

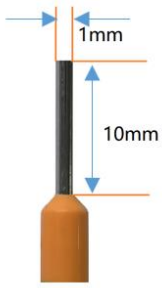

4 Wiring

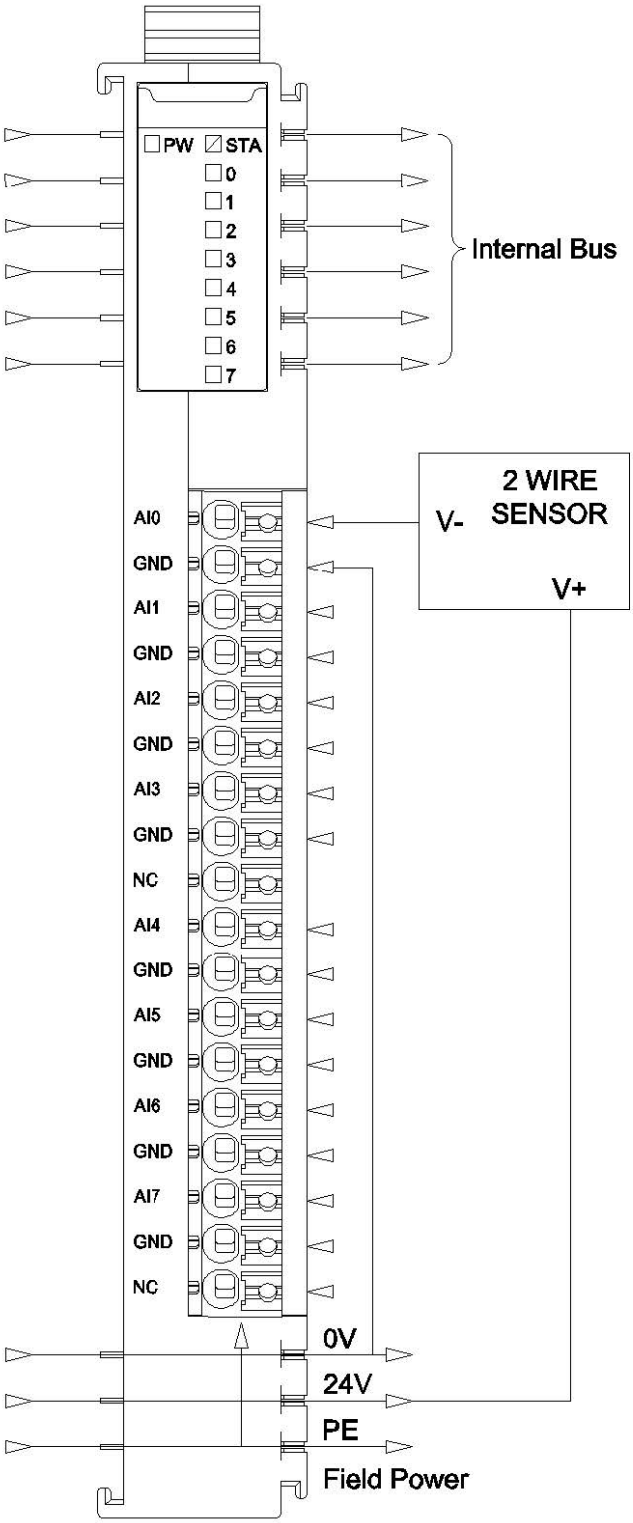
PW
STA
0
1
2
3
4
5
6
7
Internal Bus
2 WIRE
SENSOR
V-
V+
AI0
GND
AI1
GND
AI2
GND
AI3
GND
NC
AI4
GND
AI5
GND
AI6
GND
AI7
GND
NC
0V
24V
PE
Field Power

5 Process data definition

Input data								
Bit No	Bit 7	Bit 6	Bit 5	Bit 4	Bit 3	Bit 2	Bit 1	Bit 0
Byte 0	Analog Input Data(CH 0)							
Byte 1								
Byte 2	Analog Input Data(CH 1)							
Byte 3								
Byte 4	Analog Input Data(CH 2)							
Byte 5								
Byte 6	Analog Input Data(CH 3)							
Byte 7								
Byte 8	Analog Input Data(CH 4)							
Byte 9								
Byte 10	Analog Input Data(CH 5)							
Byte 11								
Byte 12	Analog Input Data(CH 6)							
Byte 13								
Byte 14	Analog Input Data(CH 7)							
Byte 15								

Data description: **Analog Input Data (CH0-7):** Analog signal Input value of corresponding channel.

Analog Input Data (NT-3258)				
Current (0-20mA)	Current (-20-0mA)	Current (±20mA)	Decimal	Hexadecimal
>24	>0	>24	32767	7FFF
24		24	4095	0FFF
.	.	.	.	.
20	.	20	3412	0D54
.	.	.	.	..
10		10	1706	06AA
.	.	.	.	.
0	0	0	0	0000
<0			.	.
	.-10	-10	-1706	F956.
	.	.		.
	.-20	-20	-3412.	F2AC
	.	.	.	
	-24	-24	-4095	F001
	<-24	<-24	-32768	8000

6 Configuration parameter definition

Configuration parameters								
Bit No	Bit 7	Bit 6	Bit 5	Bit 4	Bit 3	Bit 2	Bit 1	Bit 0
Byte 0	16Bit Data Format							
Byte 1	Current Type Ch#7	Current Type Ch#6	Current Type Ch#5	Current Type Ch#4	Current Type Ch#3	Current Type Ch#2	Current Type Ch#1	Current Type Ch#0

Data description:

16Bit Data Format：Analog data storage format. (default: 0)

0：A-B

1：B-A

Current Type Ch#(0-7)：Type of input signal. (default: 1)

0：-20～0mA

1：0～20mA

2：-20～20mA

A Dimension drawing

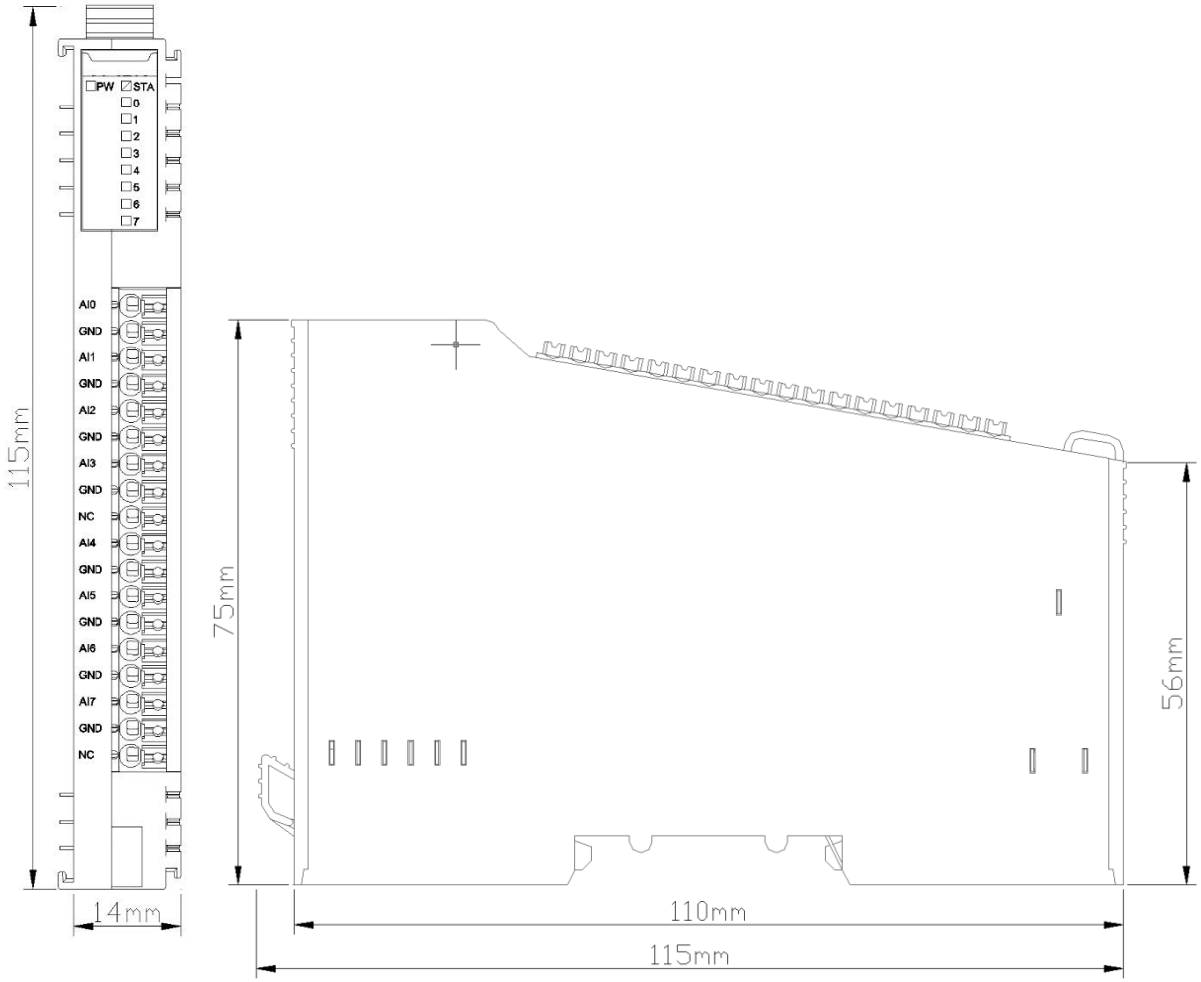

NT-3268 8 channels analog input /0～20mA OR -20~0mA OR ±20mA /15bit Single-ended bipolar

1 Module features

◆ the module supports 8-channel current signal acquisition.

◆ the module can be configured for 0~20mA OR -20~0mA OR ±20mA current signal acquisition.

◆ the module supports 2-wire (non-loop output, external power supply is required)

◆ the internal bus of the module and field input adopts magnetic insulation.

◆ the module input channel is to be connected to the field active analog signal current output sensor.

◆ the module channel equips with TVS overvoltage protection.

2 Technical parameters

General Parameters	
Power	Max.65mA@5.0Vdc
Isolation	I/O to internal bus: magnetic isolation (2.5KVrms) Power isolation: DC-DC
Wiring	Max.1.0mm² (AWG 17)
Installation	35mm DIN-Rail
Size	115*14*75mm
Weight	65g
Environmental parameters	
Working temperature	-40~85℃
Environmental humidity	5%-95% (No Condensation)
Ingress Protection Rating	IP20
Input parameters	
Channel Number	8 channels
LED Indicator	8 LED channel state indicators
Input range	Maximum: 0~24mA
Resolution ratio	15 Bit
Acquisition precision	±0.3% full range，@25℃
	±0.5% full range，@-20~70℃
Sampling rate	28ms/8 channels
Data format	16-bit signed integer
Diagnostic function	Standard mode: Overflow 32767 Standard mode: Underflow -32768 Channel disabled: -32767

3 Hardware interfaces

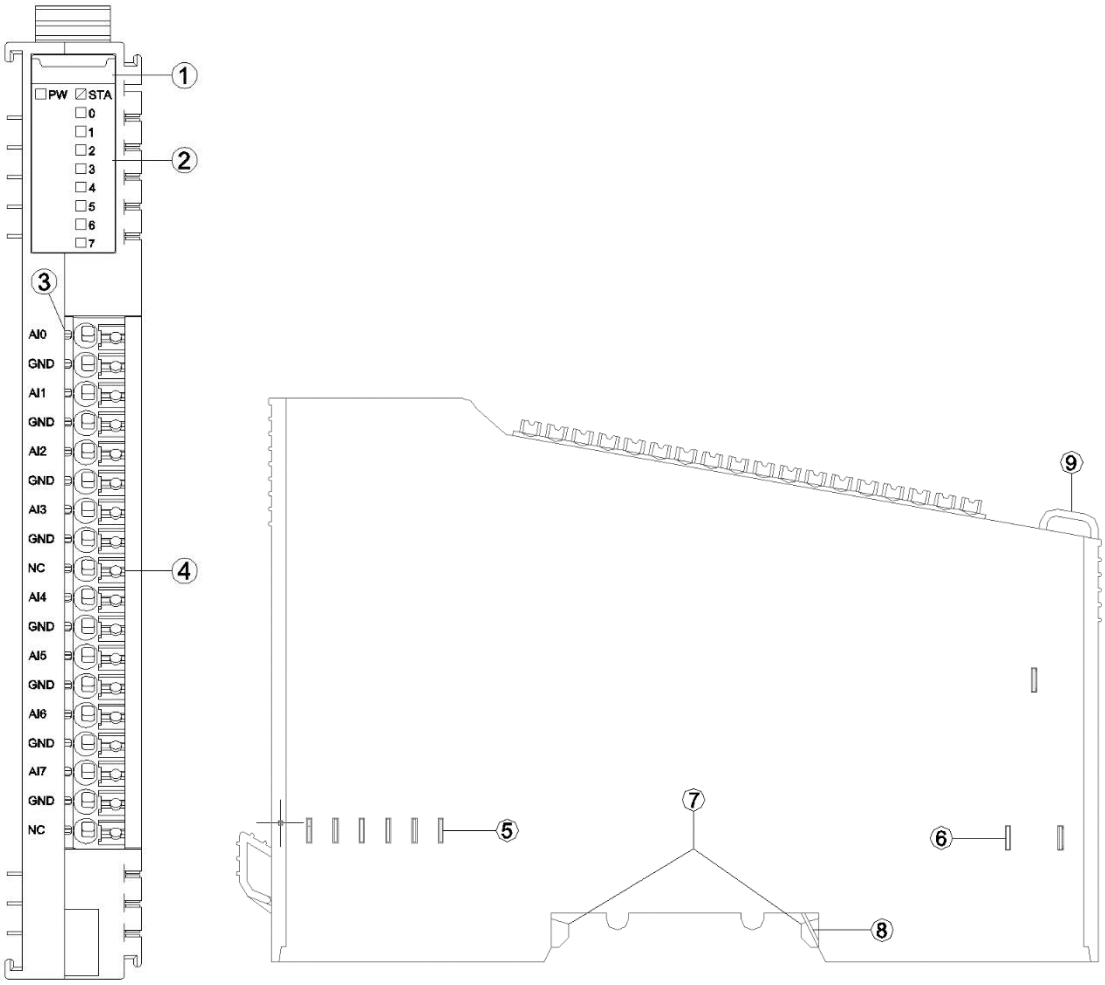

① Hardware interfaces

② State indicator

③ (none field channel indicator)

④ Wiring Terminal and marking

⑤ Internal Bus

⑥ Field Power

⑦ Buckle

⑧ Grounding Spring Sheet

⑨ Fixed Wiring Harness

3.1 LED indicator lights

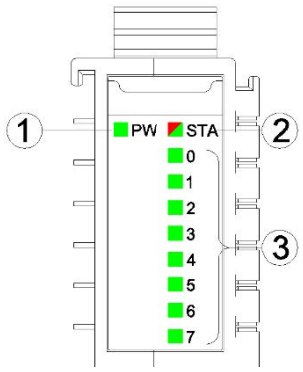

① Power indicator light (green)

② Module State indicator (red/green)

③ Input channel indicator light (green)

PW power indicator	Definition
ON	Internal bus power supply is normal
OFF	Internal bus power supply is failure
STA module State indicator	Definition
Green slow flash (2.5hz)	The internal bus of the module is not started
Red slow flash (2.5hz)	Module internal bus offline
Green on	Operation normal
Flash(2.5Hz) (RED/GREEN)	Upgrading mode
Flash(10Hz) (RED/GREEN)	Firmware upgrading
Red flashes twice	Module exception has been soft-restarted
0-7 channel indicator light	Definition
ON	Input signal >=1% range
OFF	Input signal <1% range

3.2 Terminal definition

Terminal number	Definition	Description
1	AI0	Current input CH0
2	GND	
3	AI1	Current input CH1
4	GND	
5	AI2	Current input CH2
6	GND	
7	AI3	Current input CH3
8	GND	
9	NC	Not connected
10	AI4	Current input CH4
11	GND	
12	AI5	Current input CH5
13	GND	
14	AI6	Current input CH6
15	GND	
16	AI7	Current input CH7
17	GND	
18	NC	Not connected

It is recommended to use cables with cores smaller than 1mm².

The cold-pressed terminal parameters are as follows:

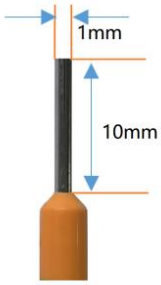

4 Wiring

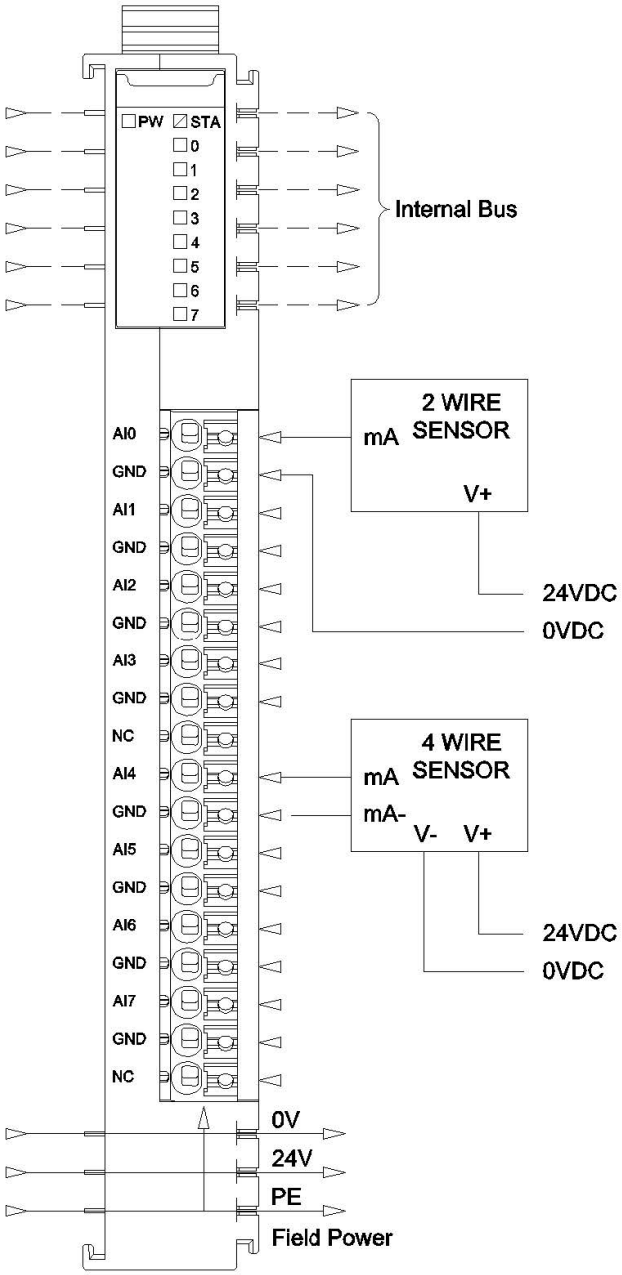
PW
STA
0
1
2
3
4
5
6
7
Internal Bus
AI0
GND
AI1
GND
AI2
GND
AI3
GND
NC
AI4
GND
AI5
GND
AI6
GND
AI7
GND
NC
2 WIRE SENSOR
mA
V+
24VDC
0VDC
4 WIRE SENSOR
mA
mA-
V-
V+
24VDC
0VDC
0V
24V
PE
Field Power

5 Process data definition

Input data								
Bit No	Bit 7	Bit 6	Bit 5	Bit 4	Bit 3	Bit 2	Bit 1	Bit 0
Byte 0	Analog Input Data (CH 0)							
Byte 1								
Byte 2	Analog Input Data (CH 1)							
Byte 3								
Byte 4	Analog Input Data (CH 2)							
Byte 5								
Byte 6	Analog Input Data (CH 3)							
Byte 7								
Byte 8	Analog Input Data (CH 4)							
Byte 9								
Byte 10	Analog Input Data (CH 5)							
Byte 11								
Byte 12	Analog Input Data (CH 6)							
Byte 13								
Byte 14	Analog Input Data (CH 7)							
Byte 15								

5.1 Process data definition (standard mode)

Data description:

Analog Input Data (CH0-7): input value of the corresponding channel current signal.

Analog Input Data (NT-3268)			
Current (0-20mA)	Decimal	Hexadecimal	Remark
>23.52	32767	7FFF	Overflow
23.52	32511	7EFF	Exceed the upper limit
.	.	.	
>20	27649	6C01	
20	27648	6C00	Rated range
.	.	.	
10	13824	3600	
.	.	.	
0	0	0	
<0	0	0	Exceed the lower limit
	.	.	

Analog Input Data (NT-3268)			
Current (0-20mA)	Decimal	Hexadecimal	Remark
>23.52	32767	7FFF	Overflow
23.52	32511	7EFF	Exceed the upper limit
.	.	.	
>20	27649	6C01	
20	27648	6C00	Rated range
.	.	.	
10	13824	3600	
.	.	.	
0	0	0	
<0	0	0	Exceed the lower limit
	.	.	
-3.52	-4864	ED00	
<-3.52	-32768	8000	Underflow

Analog Input Data (NT-3268)			
Current (0-20mA)	Decimal	Hexadecimal	Remark
>3.52	32767	7FFF	Overflow
3.52	4864	1300	Exceed the upper limit
.	.	.	
>0	0	0	
0	0	0	Rated range
.	.	.	
-10	-13824	CA00	
.	.	.	
-20	-27648	9400	
<-20	-27949	93FF	Exceed the lower limit
.	.	.	
-23.52	-32511	8101	
<-23.52	-32768	8000	Underflow

Analog Input Data (NT-3268)			
Current (0-20mA)	Decimal	Hexadecimal	Remark
>23.52	32767	7FFF	Overflow
23.52	32511	7EFF	Exceed the upper limit
.	.	.	
>20	27649	6C01	
20	27648	6C00	Rated range
.	.	.	
10	13824	3600	
.	.	.	
0	0	0	
.	.	.	
-10	-13824	CA00	
.	.	.	
-20	-27648	9400	
<-20	-27949	93FF	Exceed the lower limit
.	.	.	
-23.52	-32511	8101	
<-23.52	-32768	8000	Underflow

5.2 Process data definition (special mode)

Data description:

Analog Input Data (CH0-7): input value of the corresponding channel current signal.

Analog Input Data (NT-3268)					
Current (0-20mA)	Current (-20-0mA)	Current (±20mA)	Decimal	Hexadecimal	Remarks
20	.	20	32767	7FFF	Normal range
.	.	.	.	.	
10		10	13824	3600	
.	.	.	.	.	
0	0	0	0	0	
<0	.	.	.	.	
	.-10	-10	-13824	CA00	
	.	.	.	.	
	.-20	-20	-32768	8000	

6 Configuration parameter definition

Configuration parameters								
Bit No	Bit 7	Bit 6	Bit 5	Bit 4	Bit 3	Bit 2	Bit 1	Bit 0
Byte 0	16Bit Data Format							
Byte 1	Current Type Ch#7	Current Type Ch#6	Current Type Ch#5	Current Type Ch#4	Current Type Ch#3	Current Type Ch#2	Current Type Ch#1	Current Type Ch#0

Data description:

16Bit Data Format：Analog data storage format. (default: 0)

0：A-B

1：B-A

Current Type Ch#(0-7)：Type of input signal. (default: 1)

0：-20～0mA

1：0～20mA

2：-20～20mA

A Dimension drawing

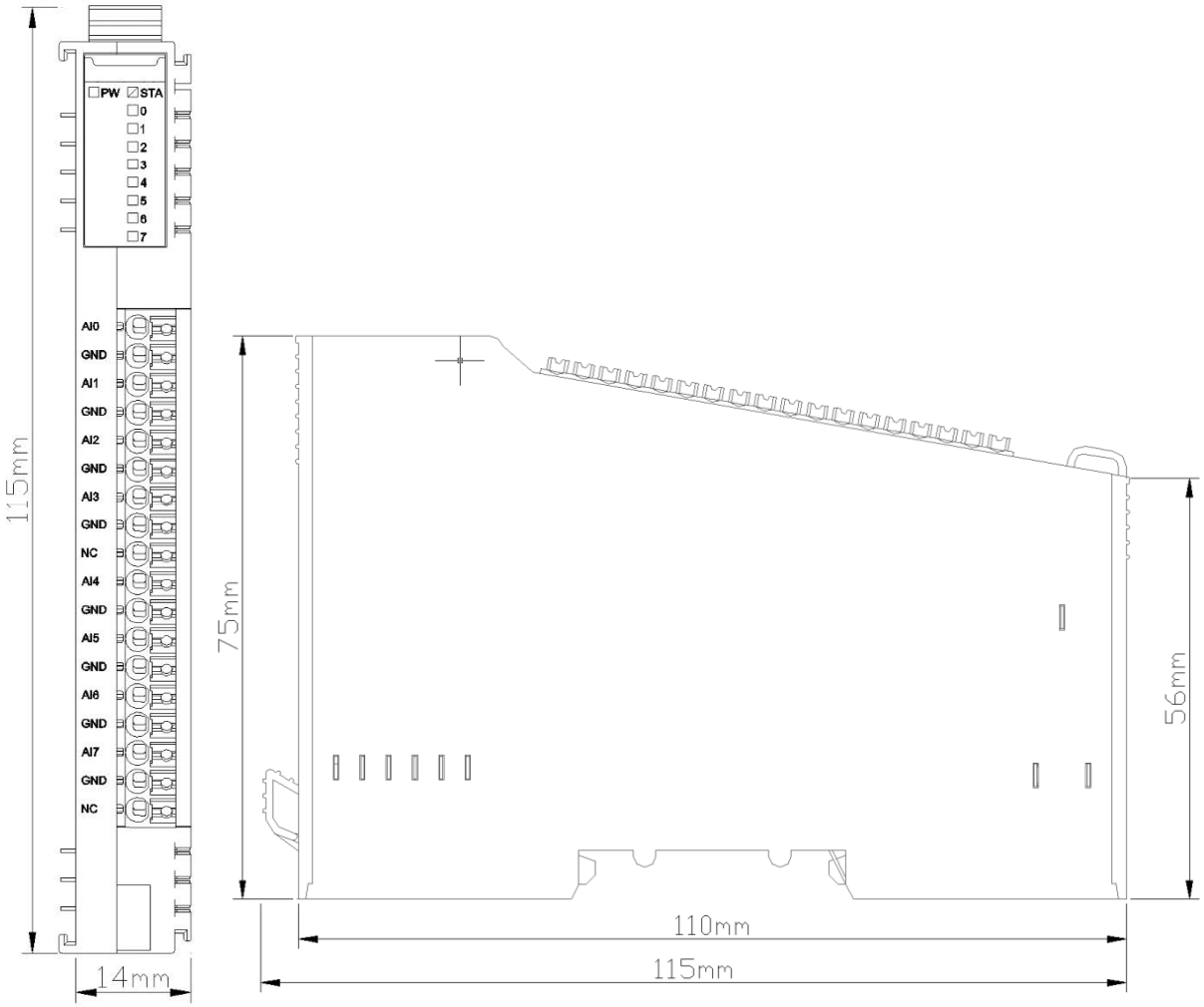

NT-3713: 3 channels RTD-PT100 temperature acquisition module

1 Module features

◆ The module supports 3-channel RTD thermal resistance (PT100) temperature acquisition

◆ The module could be connected to a 2-wire or 3-wire PT100 temperature sensor

◆ The internal bus of the module and field input adopts magnetic isolation

◆ The module carries with 3 analog input channel LED indicator

◆ 15-bit ADC resolution

2 Technical Parameters

General parameters	
Power	Max.35mA@5.0Vdc
Isolation	I/O to internal bus: magnetic isolation (2.5KVrms)
Field Power	Not used
Wiring	Max.1.0mm² (AWG 17)
Mounting Type	35mmDIN-Rail
Size	115*14*75mm
Weight	65g
Environment Specification	
Operational Temperature	-40~85℃
Operational Humidity	5%~95% RH (No Condensation)
Ingress Protection Rating	IP20
Input Parameter	
Channel Number	3 Channels
LED Indicator	3 Green LED
Resolution	15 bits
Sensor Type	PT100
Measurement Range	-240~880℃
Measurement Accuracy	0.5℃
Conversion Rate	400ms/3 channels

3 Hardware Interface

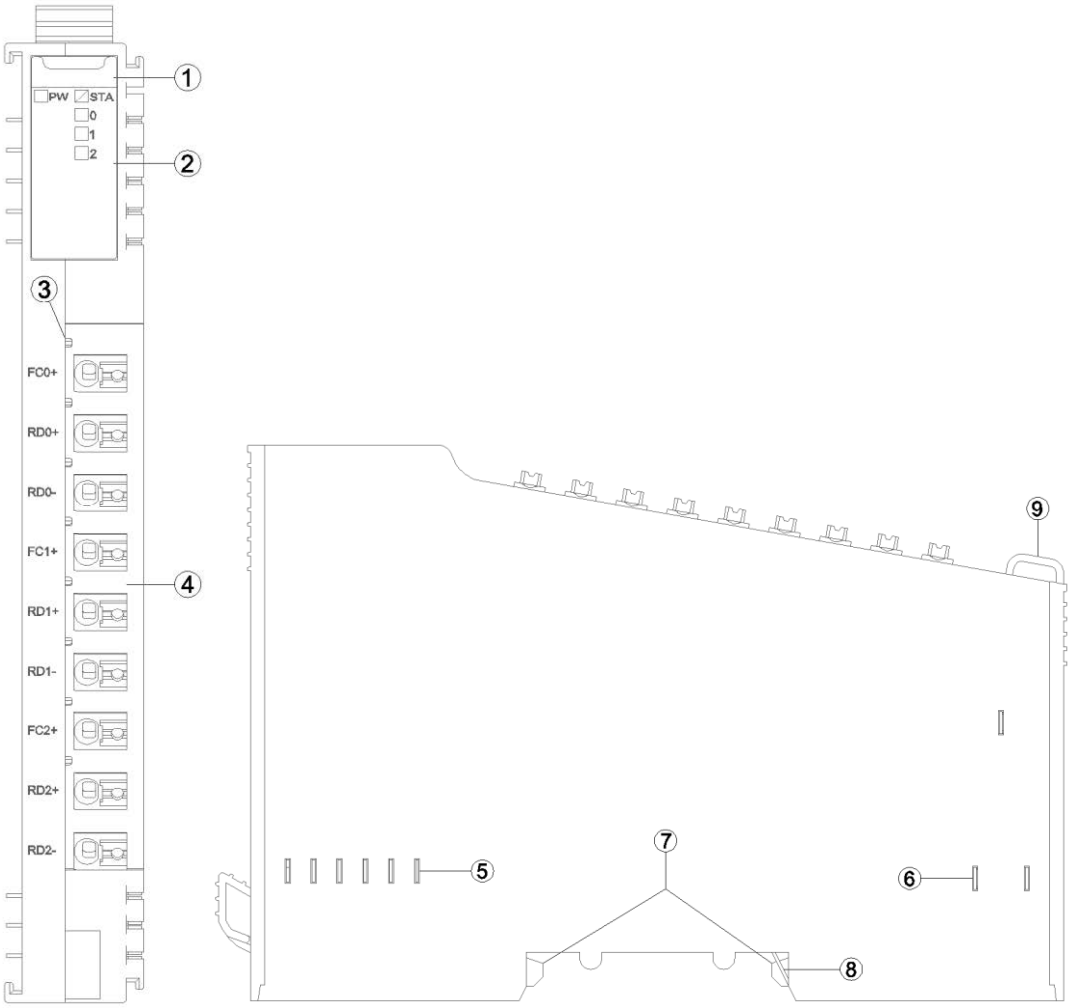

① Module Type

② State indicator

③ N/A

④ Wiring Terminal and identification

⑤ Internal Bus

⑥ Field Power

⑦ Buckle

⑧ Grounding Spring Sheet

⑨ Fixed Wiring Harness

3.1 LED indicator definition

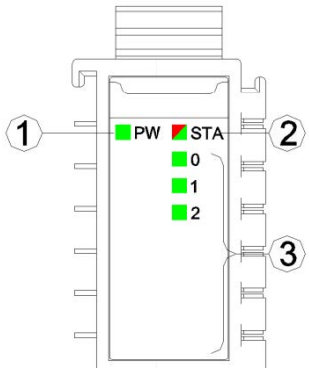

① Power LED indicator (green)

② Module State LED indicator (red/green)

③ Output channel LED indicator (green)

PW POWER STATE (GREEN)	Definition
ON	Internal bus Power Normal
OFF	Internal bus Power Failure
STA MODULE STATE (RED/GREEN)	Definition
Green slow flash (2.5Hz)	Module internal bus is not started
Red slow flash (2.5Hz)	Module internal bus offline
ON (GREEN)	Operation normal
Flash(2.5Hz) (RED/GREEN)	Upgrading mode
Flash(10Hz) (RED/GREEN)	Firmware Update
Double Flash (RED)	Module Exception has been soft-restarted
0-2 Channel Indicator	Definition
ON	The input signal exceeds 1% of the range
OFF	Invalid input signal

3.2 Terminal definition

Terminal Number	Definition	Description
1	FC0+	Signal Input CH0
2	RD0+	
3	RD0-	
4	FC1+	Signal Input CH1
5	RD1+	
6	RD1-	
7	FC2+	Signal Input CH2
8	RD2+	
9	RD2-	

It is recommended to use cables with cores smaller than 1mm².

The cold-pressed terminal parameters are as follows:

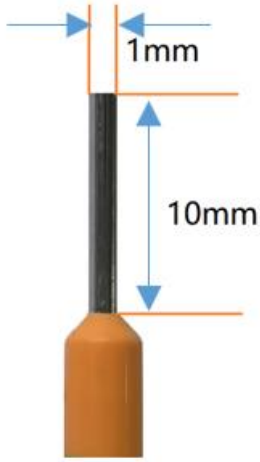

4 Wiring

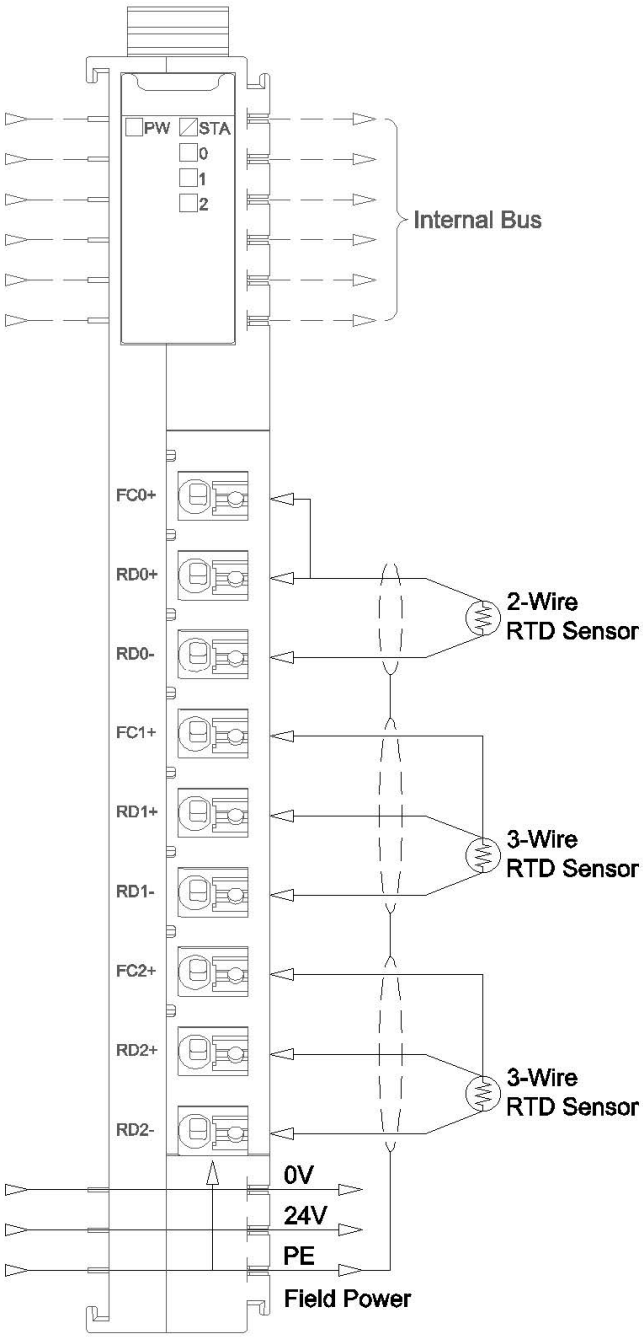
PW
STA
0
1
2
Internal Bus
FC0+
RD0+
RD0-
FC1+
RD1+
RD1-
FC2+
RD2+
RD2-
2-Wire
RTD Sensor
3-Wire
RTD Sensor
3-Wire
RTD Sensor
0V
24V
PE
Field Power

5 Process data definition

Input Data								
Bit No	Bit 7	Bit 6	Bit 5	Bit 4	Bit 3	Bit 2	Bit 1	Bit 0
Byte 0	Analog Input Data(CH 0)							
Byte 1								
Byte 2	Analog Input Data(CH 1)							
Byte 3								
Byte 4	Analog Input Data(CH 2)							
Byte 5								

Data description：

Analog Input Data (CH0-2)：Analog channel input data values

Process Data Definition			
Temperature	Decimal	Hex	Location
>880.0	32767	7FFF	Overflow
880.0	8800	2260	Exceeds the upper limit
.	.	.	
.	.	.	
850.1	8501	2135	
850.0	8500	2134	Rated range
.	.	.	
.	.	.	
-200.0	-2000	F830	
-200.1	-2001	F82F	Exceeds the lower limit
.	.	.	
.	.	.	
-240.0	-2400	F6A0	
<-240.0	-32768	8000	Underflow

6 Configuration parameters definition

Configuration Parameter								
Bit No	Bit 7	Bit 6	Bit 5	Bit 4	Bit 3	Bit 2	Bit 1	Bit 0
Byte 0	Reserved							16Bit Data Format

Data description：

16Bit Data Format：Sequence of 16-bit data byte transmission (Default: 0)

0：A_B

1：B_A

A Dimension drawing

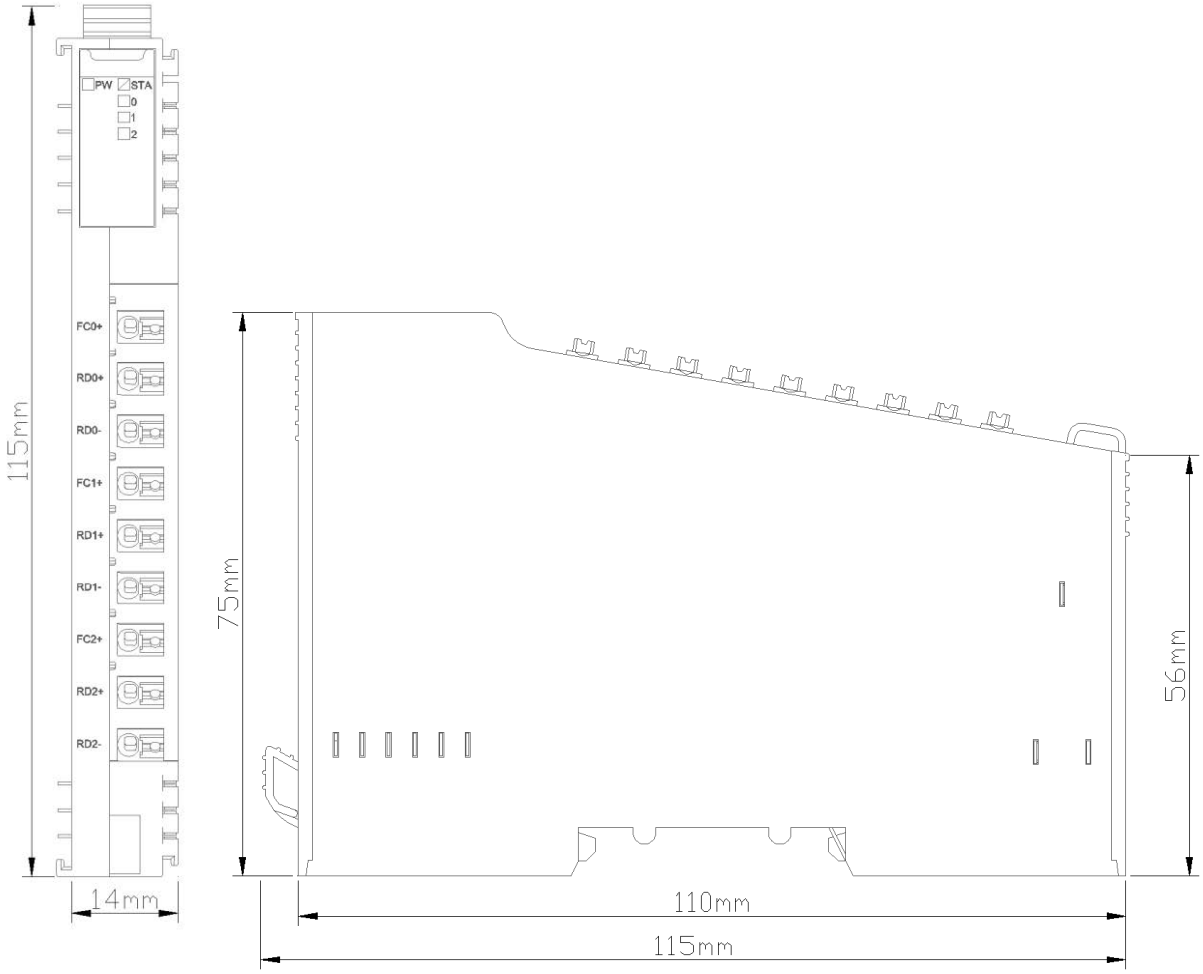

NT-3723 3 channels RTD-PT1000 temperature acquisition module

1 Module features

- The module supports 3-channel RTD thermal resistance (PT1000) temperature acquisition
- The module could be connected to a 2-wire or 3-wire PT1000 temperature sensor
- The internal bus of the module and field input adopts magnetic isolation
- The module carries with 3 analog input channel LED indicator
- 15-bits ADC resolution

2 Technical Parameters

General parameters	
Power	Max.35mA@5.0Vdc
Isolation	I/O to internal bus: magnetic isolation (2.5KVrms)
Field Power	Not used
Wiring	Max.1.0mm² (AWG 17)
Mounting Type	35mmDIN-Rail
Size	115*14*75mm
Weight	65g
Environment Specification	
Operational Temperature	-40~85℃
Operational Humidity	5%~95% RH (No Condensation)
Ingress Protection Rating	IP20
Input Parameter	
Channel Number	3 Channels
LED Indicator	3 Green LED
Resolution	15 bits
Sensor Type	PT1000
Measurement Range	-240~880℃
Measurement Accuracy	0.5℃
Conversion Rate	400ms/3 channels
Diagnostic function	32766：The sensor is not connected or disconnected -32766：Short Circuited 32765：Chip failure 32767：Overflow -32768：Underflow

3 Hardware Interface

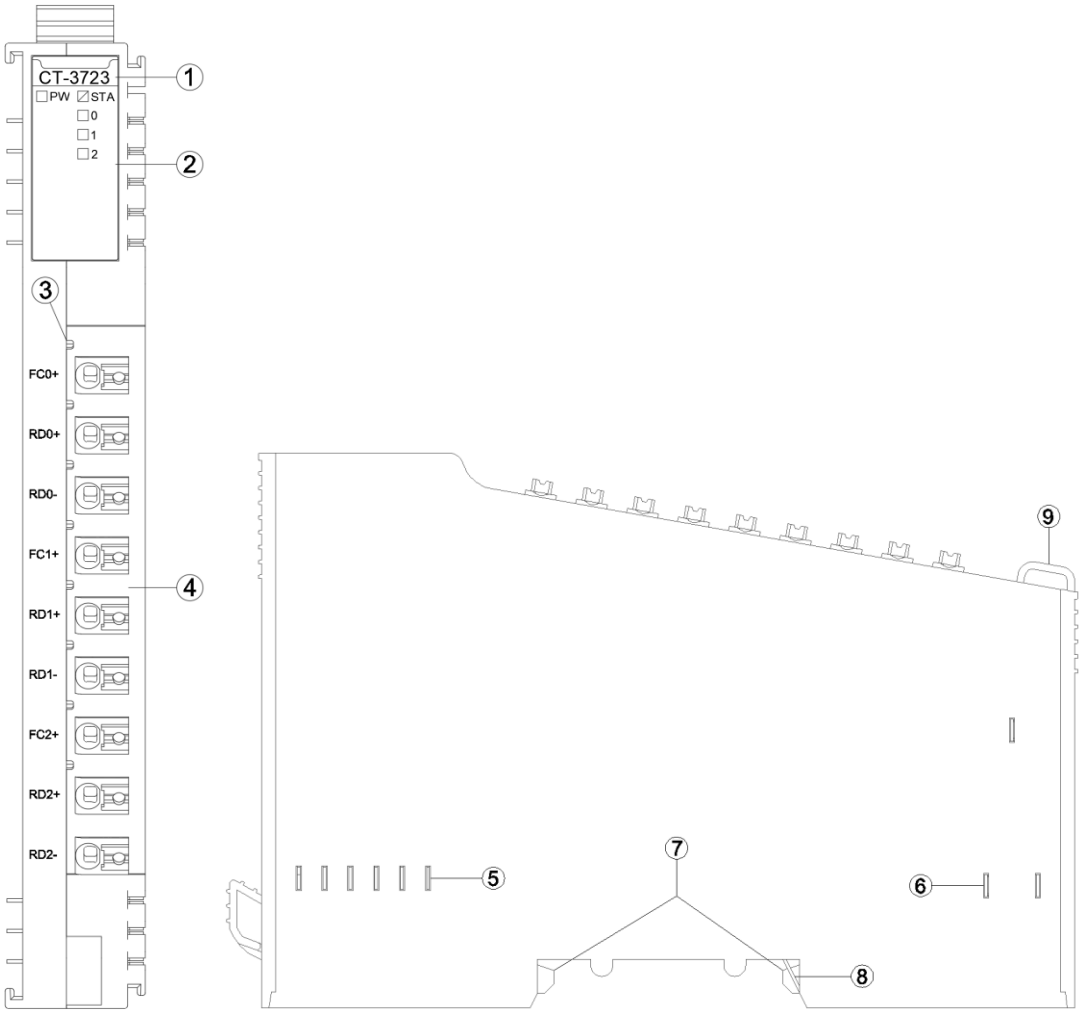

① Module Type

② State indicator

③ N/A

④ Wiring Terminal and identification

⑤ Internal Bus

⑥ Field Power

⑦ Buckle

⑧ Grounding Spring Sheet

⑨ Fixed Wiring Harness

3.1 LED indicator definition

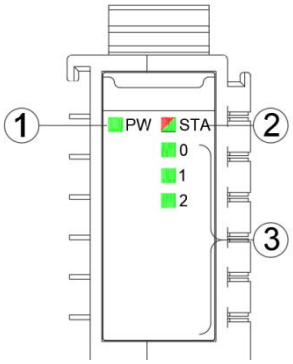

① Power LED indicator (green)

② Module State LED indicator (red/green)

③ Output channel LED indicator (green)

PW POWER STATE (GREEN)	Definition
ON	Internal bus Power Normal
OFF	Internal bus Power Failure
STA MODULE STATE (RED/GREEN)	Definition
Green slow flash (2.5Hz)	Module internal bus is not started
Red slow flash (2.5Hz)	Module internal bus offline
ON (GREEN)	Operation normal
Flash(2.5Hz) (RED/GREEN)	Upgrading mode
Flash(10Hz) (RED/GREEN)	Firmware Update
Double Flash (RED)	Module Exception, has been soft-restarted
0-2 Channel Indicator	Definition
ON	The input signal exceeds 1% of the range
OFF	Invalid input signal

3.2 Terminal definition

Terminal Number	Definition	Description
1	FC0+	Signal Input CH0
2	RD0+	
3	RD0-	
4	FC1+	Signal Input CH1
5	RD1+	
6	RD1-	
7	FC2+	Signal Input CH2
8	RD2+	
9	RD2-	

It is recommended to use cables with cores greater than 0.2mm² and smaller than 1mm².

When connecting cables (terminals)with cores, need to check and connect them according to the corresponding node serial number.

The cold-pressed terminal parameters are as follows:

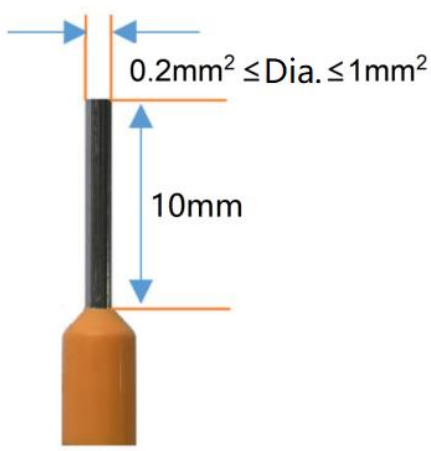

4 Wiring

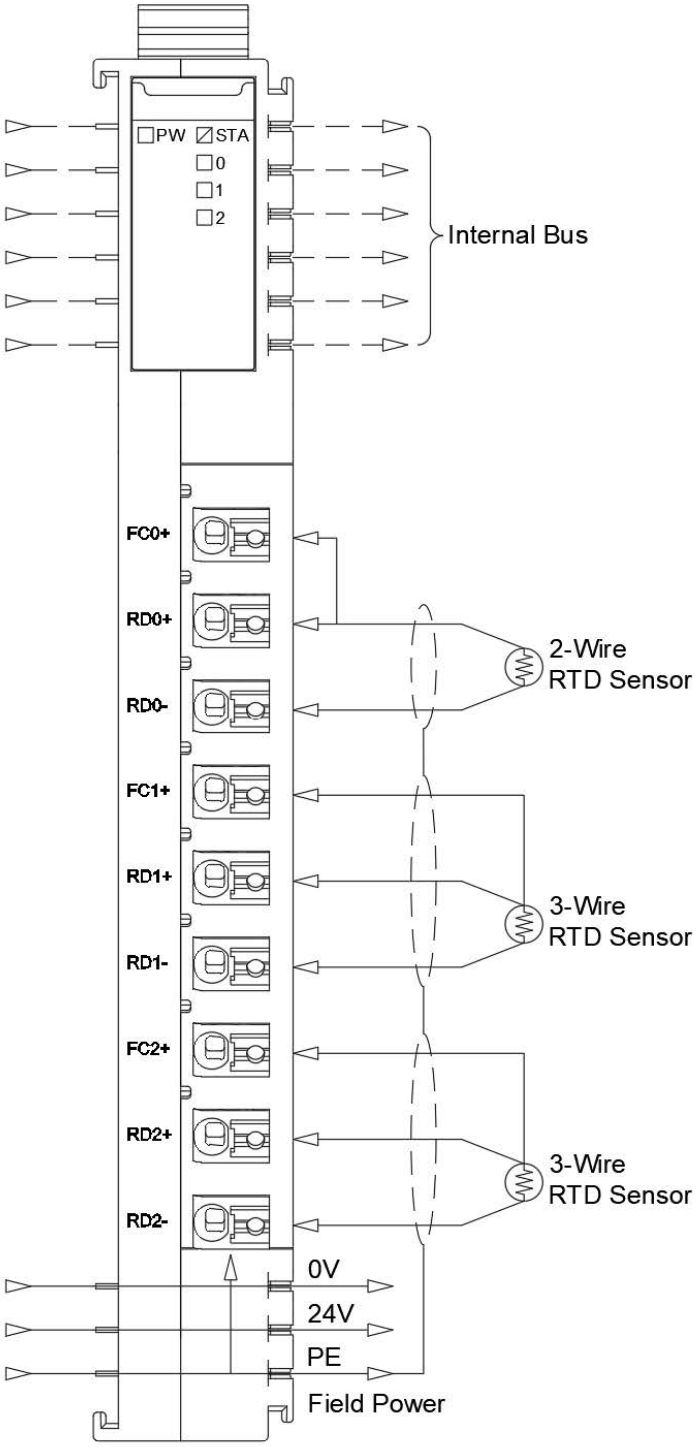
PW
STA
0
1
2
Internal Bus
FC0+
RD0+
RD0-
FC1+
RD1+
RD1-
FC2+
RD2+
RD2-
2-Wire
RTD Sensor
3-Wire
RTD Sensor
3-Wire
RTD Sensor
0V
24V
PE
Field Power

5 Process data definition

Input Data								
Bit No	Bit 7	Bit 6	Bit 5	Bit 4	Bit 3	Bit 2	Bit 1	Bit 0
Byte 0	Analog Input Data (CH 0)							
Byte 1								
Byte 2	Analog Input Data (CH 1)							
Byte 3								
Byte 4	Analog Input Data (CH 2)							
Byte 5								

Data description：

Analog Input Data (CH0-2)：Analog channel input data values

Process Data Definition			
Temperature	Decimal	Hex	Location
>880.0	32767	7FFF	Overflow
880.0	8800	2260	Exceeds the upper limit
.	.	.	
.	.	.	
850.1	8501	2135	
850.0	8500	2134	Rated range
.	.	.	
.	.	.	
-200.0	-2000	F830	
-200.1	-2001	F82F	Exceeds the lower limit
.	.	.	
.	.	.	
-240.0	-2400	F6A0	
<-240.0	-32768	8000	Underflow

6 Configuration parameters definition

Configuration Parameter								
Bit No	Bit 7	Bit 6	Bit 5	Bit 4	Bit 3	Bit 2	Bit 1	Bit 0
Byte 0	Reserved		Channel Enable (CH 2)	Channel Enable (CH 1)	Channel Enable (CH 0)	Temperature Unit		16Bit Data Format
Byte 1	Filter frequency (CH 0)							
Byte 2	Filter frequency (CH 1)							
Byte 3	Filter frequency (CH 2)							
Byte 4 -Byte 8	Reserved							

Data description：

16Bit Data Format：Sequence of 16-bit data byte transmission (Default: 0)

0：A_B

1：B_A

Temperature Unit：Temperature unit. Celsius, Fahrenheit, Kelvin is optional. (Default: 0)

0：℃

1：℉

2：K-

Channel Enable(CH 0~CH 5)：Channel enable, disable and enable are optional. (Default: 1)

0：Disable

1：Enable

Filter frequency(CH 0~CH5)：Filter frequency,1-31 can be set (Defaul:10)

A Dimension drawing

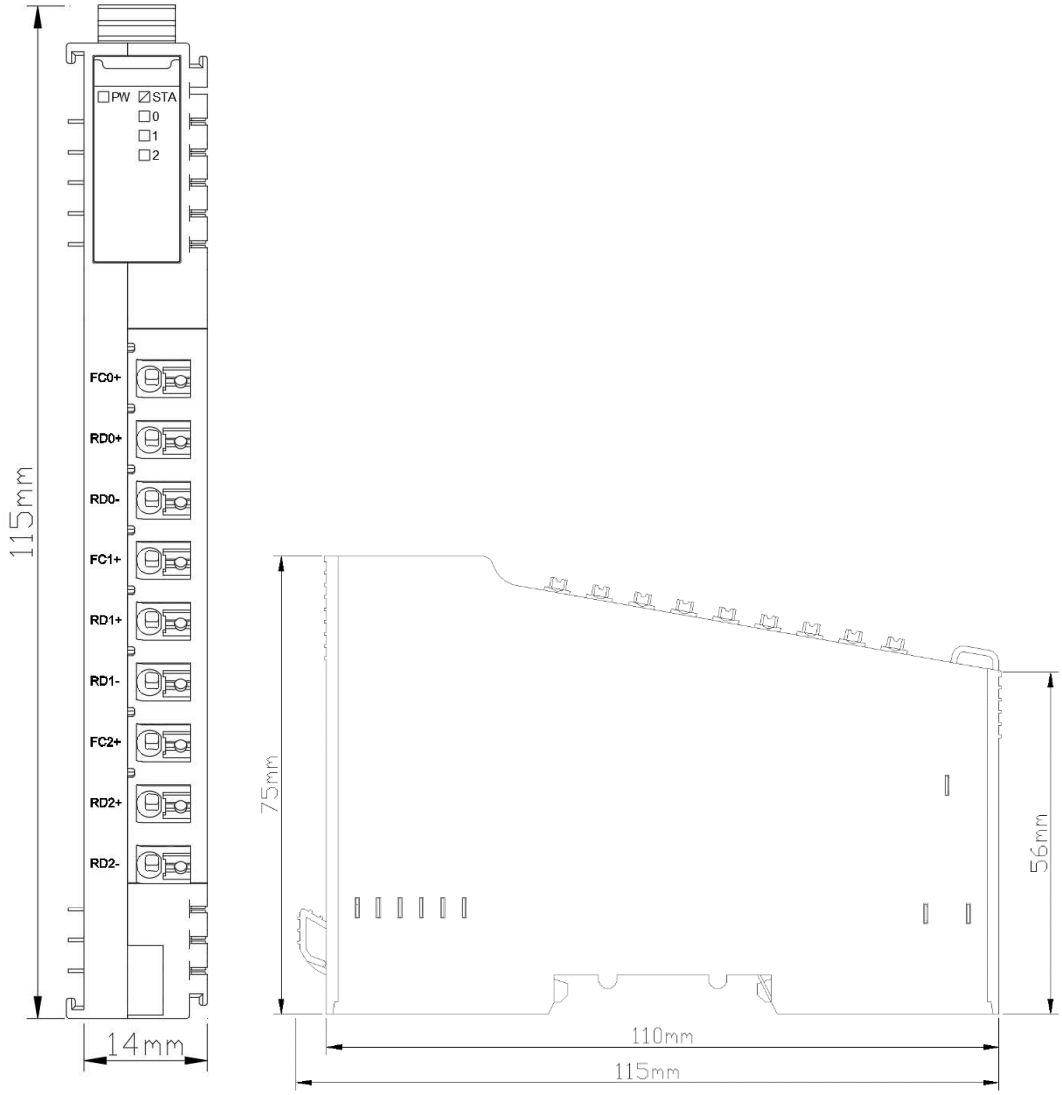

NT-3734 4 channels RTD-PT100 temperature acquisition module

1 Module features

- The module supports 4-channel RTD thermal resistance (PT100) temperature acquisition
- The channels are isolated, and the isolation voltage is 1500V
- The module could be connected to a 2-wire or 3-wire PT100 temperature sensor
- The internal bus of the module and field input adopts magnetic isolation
- The module carries with 4 analog input channel LED indicator
- 15-bits ADC resolution

2 Technical Parameters

General parameters	
Power	Max.65mA@5.0Vdc
Isolation	I/O to internal bus: magnetic isolation (2.5KVrms)
Field Power	Not used
Wiring	I/O wiring Max.1.0mm² (AWG 17)
Mounting Type	35mm Din-rail
Size	115*14*75mm
Weight	65g
Environment Specification	
Operational Temperature	-40~85℃
Operational Humidity	5%~95% RH (No Condensation)
Ingress Protection Rating	IP20
Input Parameter	
Channel Number	4 channels
LED Indicator	4 Green LED
Resolution	15 Bits
Sensor Type	PT100
Measurement Range	-240~880℃
Measurement Accuracy	0.5℃
Conversion Rate	400ms/4 channels
Diagnostic function	32766：The sensor is not connected or disconnected -32766：Short Circuited 32765：Chip failure 32767：Overflow -32768：Underflow

3 Hardware Interface

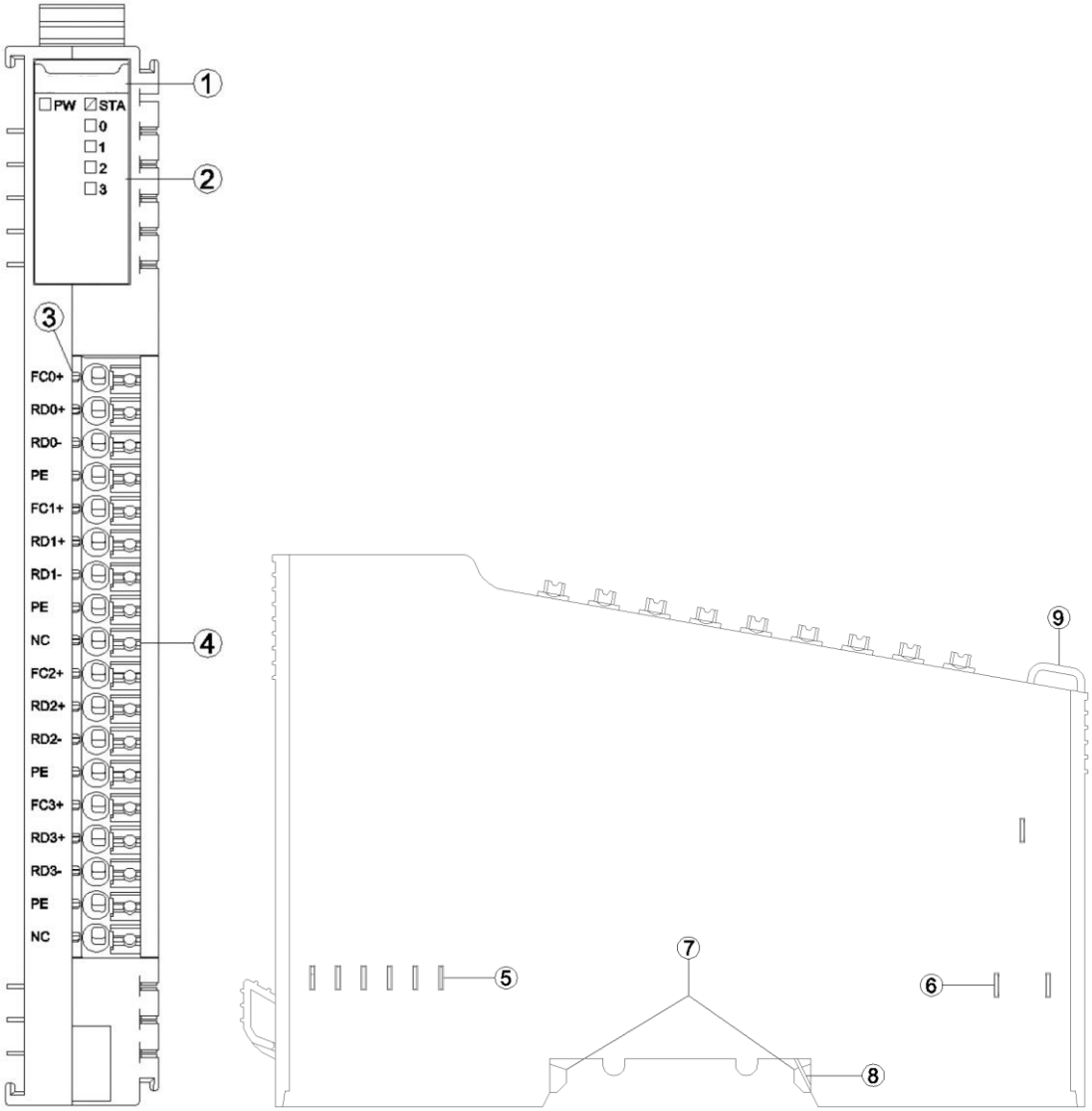

① Module Type

② State indicator

③ N/A

④ Wiring Terminal and identification

⑤ Internal Bus

⑥ Field Power

⑦ Buckle

⑧ Grounding Spring Sheet

⑨ Fixed Wiring Harness

3.1 LED indicator definition

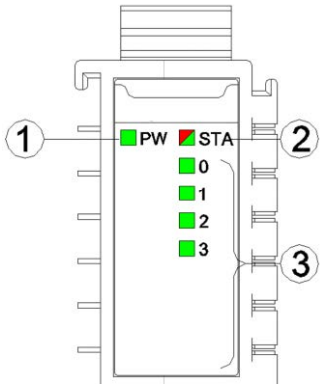

① Power LED indicator (green)

② Module State LED indicator (red/green)

③ Output channel LED indicator (green)

PW POWER STATE (GREEN)	Definition
ON	Internal bus Power Normal
OFF	Internal bus Power Failure
STA MODULE STATE (RED/GREEN)	Definition
Green slow flash (2.5Hz)	Module internal bus is not started
Red slow flash (2.5Hz)	Module internal bus offline
ON (GREEN)	Operation normal
Flash(2.5Hz) (RED/GREEN)	Upgrading mode
Flash(10Hz) (RED/GREEN)	Firmware Update
Double Flash (RED)	Module Exception, has been soft-restarted
0-3 Channel Indicator	Definition
ON	The input signal exceeds 1% of the range
OFF	Invalid input signal

3.2 Terminal definition

Terminal Number	Definition	Description
1	FC0+	Signal Input CH0
2	RD0+	
3	RD0-	
4	PE	
5	FC1+	Signal Input CH1
6	RD1+	
7	RD1-	
8	PE	
9	NC	N/A
10	FC2+	Signal Input CH2
11	RD2+	
12	RD2-	
13	PE	
14	FC3+	Signal Input CH3
15	RD3+	
16	RD3-	
17	PE	
18	NC	N/A

It is recommended to use cables with cores greater than 0.2mm² and smaller than 1mm².

When connecting cables (terminals)with cores, need to check and connect them according to the corresponding node serial number.

The cold-pressed terminal parameters are as follows:

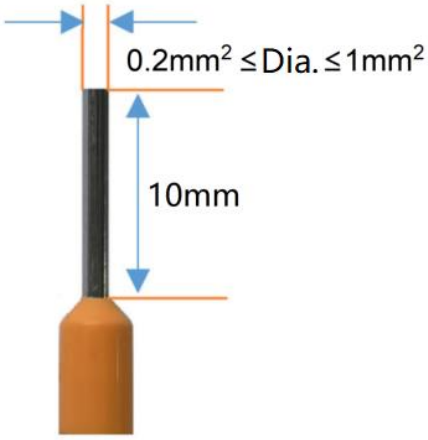

4 Wiring

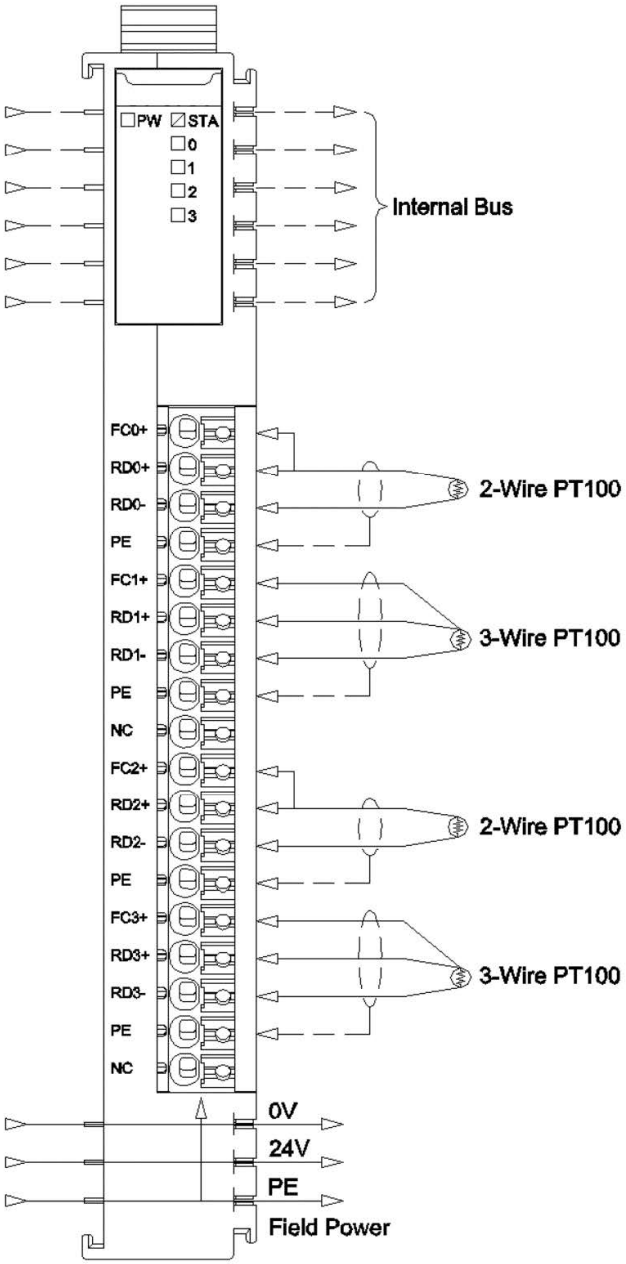
PW
STA
0
1
2
3
Internal Bus
FC0+
RD0+
RD0-
PE
FC1+
RD1+
RD1-
PE
NC
FC2+
RD2+
RD2-
PE
FC3+
RD3+
RD3-
PE
NC
2-Wire PT100
3-Wire PT100
2-Wire PT100
3-Wire PT100
0V
24V
PE
Field Power

5 Process data definition

Input data								
Bit No	Bit 7	Bit 6	Bit 5	Bit 4	Bit 3	Bit 2	Bit 1	Bit 0
Byte 0	Analog Input Data (CH 0)							
Byte 1								
Byte 2	Analog Input Data (CH 1)							
Byte 3								
Byte 4	Analog Input Data (CH 2)							
Byte 5								
Byte 6	Analog Input Data (CH 3)							
Byte 7								

Data description：

Analog Input Data (CH0-2)：Analog channel input data values

Process Data Definition			
Temperature	Decimal	Hex	Location
>880.0	32767	7FFF	Overflow
880.0	8800	2260	Exceeds the upper limit
.	.	.	
.	.	.	
850.1	8501	2135	
850.0	8500	2134	Rated range
.	.	.	
.	.	.	
-200.0	-2000	F830	
-200.1	-2001	F82F	Exceeds the lower limit
.	.	.	
.	.	.	
-240.0	-2400	F6A0	
<-240.0	-32768	8000	Underflow

6 Configuration parameters definition

Configuration parameter								
Bit No	Bit 7	Bit 6	Bit 5	Bit 4	Bit 3	Bit 2	Bit 1	Bit 0
Byte 0	Reserved							16Bits Data Format

Data description：

16Bit Data Format：Sequence of 16-bit data byte transmission (Default: 0)

0：A_B

1：B_A

A Dimension drawing

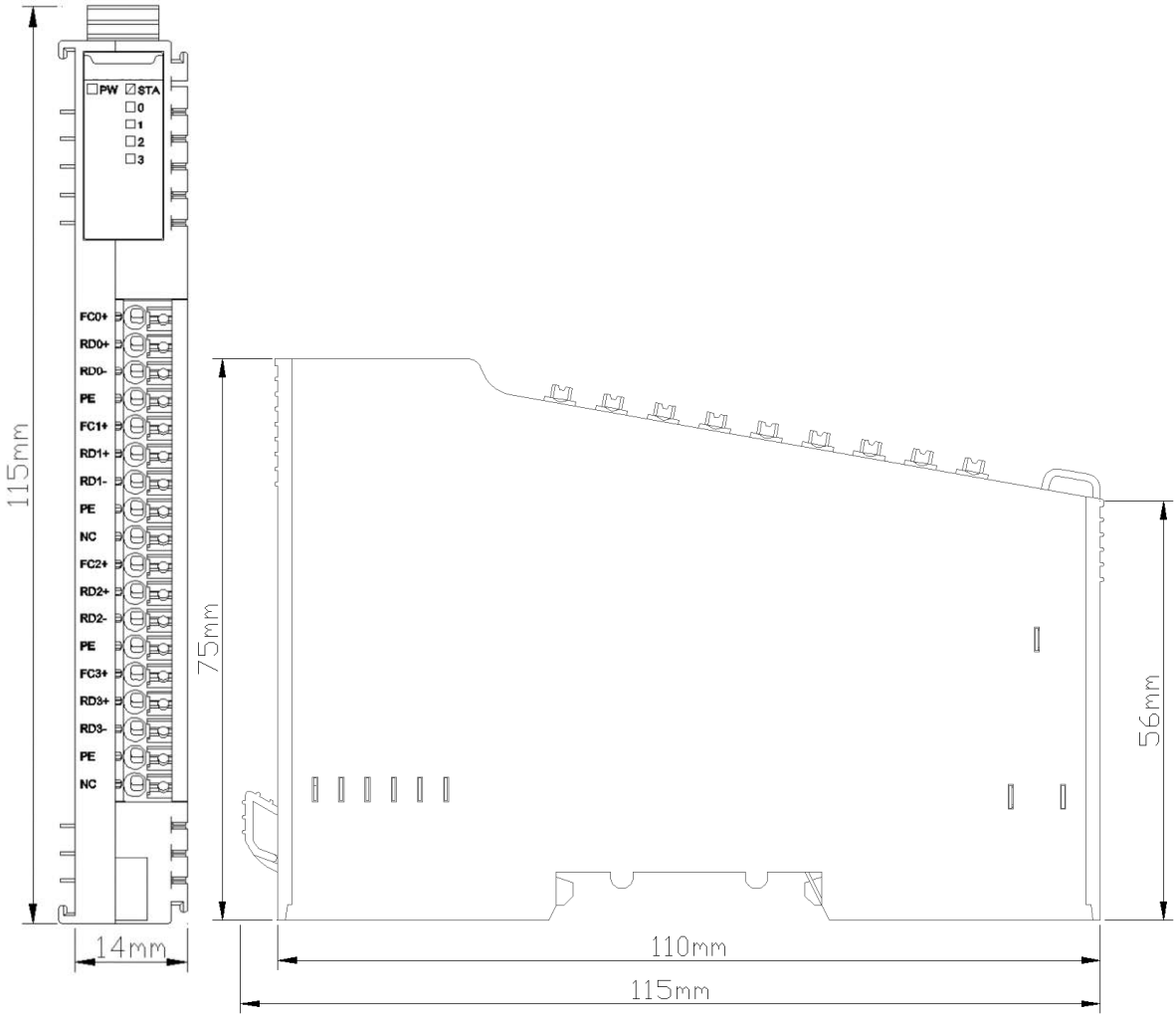

NT-3804: 4 channels Analog Input, Thermocouple

（ TC-J , K , E , T , S, R , B , N）types

1 Module features

- ◆ The module supports 4-channel thermocouple signal acquisition
- ◆ The module carries with 4 analog LED indicators
- ◆ The module supports 9 kinds of conventional thermocouple temperature measurement type
- ◆ The internal bus of the module and field input adopts magnetic isolation
- ◆ The module input channel supports TVS overvoltage protection
- ◆ 24-bit ADC resolution (Σ-δ type)
- ◆ Fixed Value Parameter

2 Technical Parameters

General parameters		
Power		Max.50mA@5.0Vdc
Isolation		I/O to internal bus: magnetic isolation (2.5KVrms)
Field Power		Not used
Wiring		Max.1.0mm² (AWG 17)
Mounting Type		35mmDIN-Rail
Size		115*14*75mm
Weight		65g
Environment Specification		
Operational Temperature		-40~85℃
Operational Humidity		5%~95% RH(No Condensation)
Ingress Protection Rating		IP20
Input Parameter		
Channel Number		4 Channels
LED Indicator		4 Input LED Indicators
Sensor Type		J / K/ E / T / S / R / B / N type thermocouples
Acquisition Accuracy		±0.3% Full Scale，@25℃ ±0.5% Full Scale，@-40~85℃
Sampling Rate		70ms/4 channels
Measuring Range ℃	J Type	-210~1200℃
	K Type	-270~1370℃
	E Type	-270~1000℃
	T Type	-270~400℃
	S Type	-50~1760℃
	R Type	-50~1760℃
	B Type	0~1820℃
	N Type	-270~1300℃
	C Type	0~2320℃ (not available)
Data Format		16-Bit Signed Integer (Integer)
Diagnostic Function		-32767: No thermocouple model selected (that is, the channel is disabled) 32766：open circuit disconnection 32767：Temperature overflow -32768：Temperature underflow

3 Hardware Interface

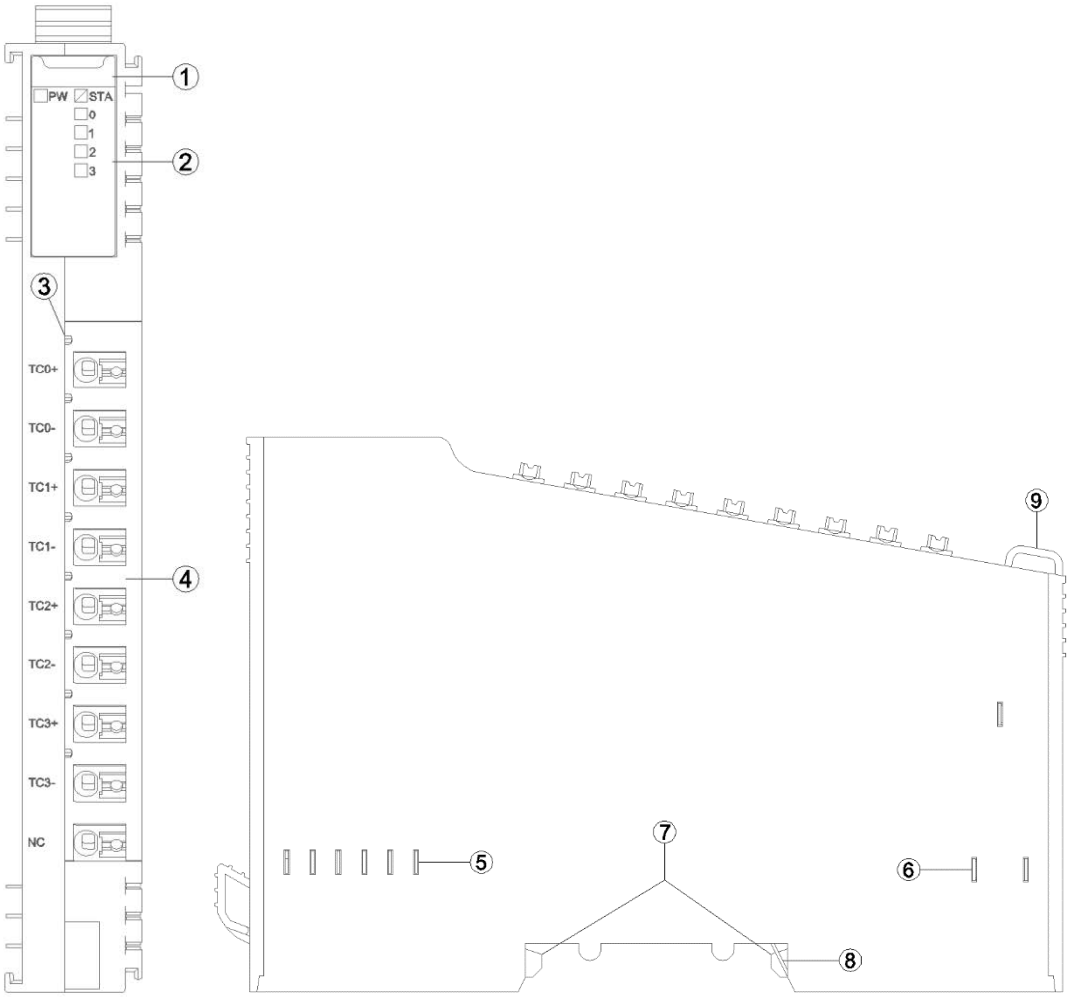

① Module Type

② State indicator

③ N/A

④ Wiring Terminal and identification

⑤ Internal Bus

⑥ Field Power

⑦ Buckle

⑧ Grounding Spring Sheet

⑨ Fixed Wiring Harness

3.1 LEDLED indicator definition

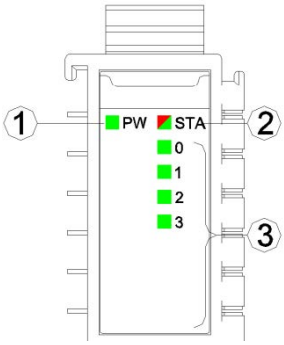

① Power LED indicator (green)

② Module State LED indicator (red/green)

③ Output channel LED indicator (green)

PW POWER STATE (GREEN)	Definition
ON	Internal bus Power Normal
OFF	Internal bus Power Failure
STA MODULE STATE (RED/GREEN)	Definition
Green slow flash (2.5Hz)	Module internal bus is not started
Red slow flash (2.5Hz)	Module internal bus offline
ON (GREEN)	Operation normal
Flash(2.5Hz) (RED/GREEN)	Upgrading mode
Flash(10Hz) (RED/GREEN)	Firmware Update
Double Flash (RED)	Module Exception has been soft-restarted
0-3 Channel Indicator	Definition
ON	The input signal exceeds 1% of the range
OFF	Invalid output signal

3.2 Terminal definition

Terminal Number	Definition	Description
1	TC0+	Signal Input CH0
2	TC0-	
3	TC1+	Signal Input CH1
4	TC1-	
5	TC2+	Signal Input CH2
6	TC2-	
7	TC3+	Signal Input CH3
8	TC3-	
9	NC	Not Connected

It is recommended to use cables with cores greater than 0.2mm² and smaller than 1mm². When connecting cables (terminals)with cores, need to check and connect them according to the corresponding node serial number.

The cold-pressed terminal parameters are as follows:

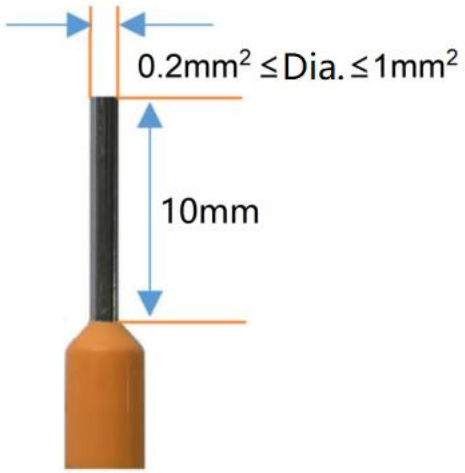

4 Wiring

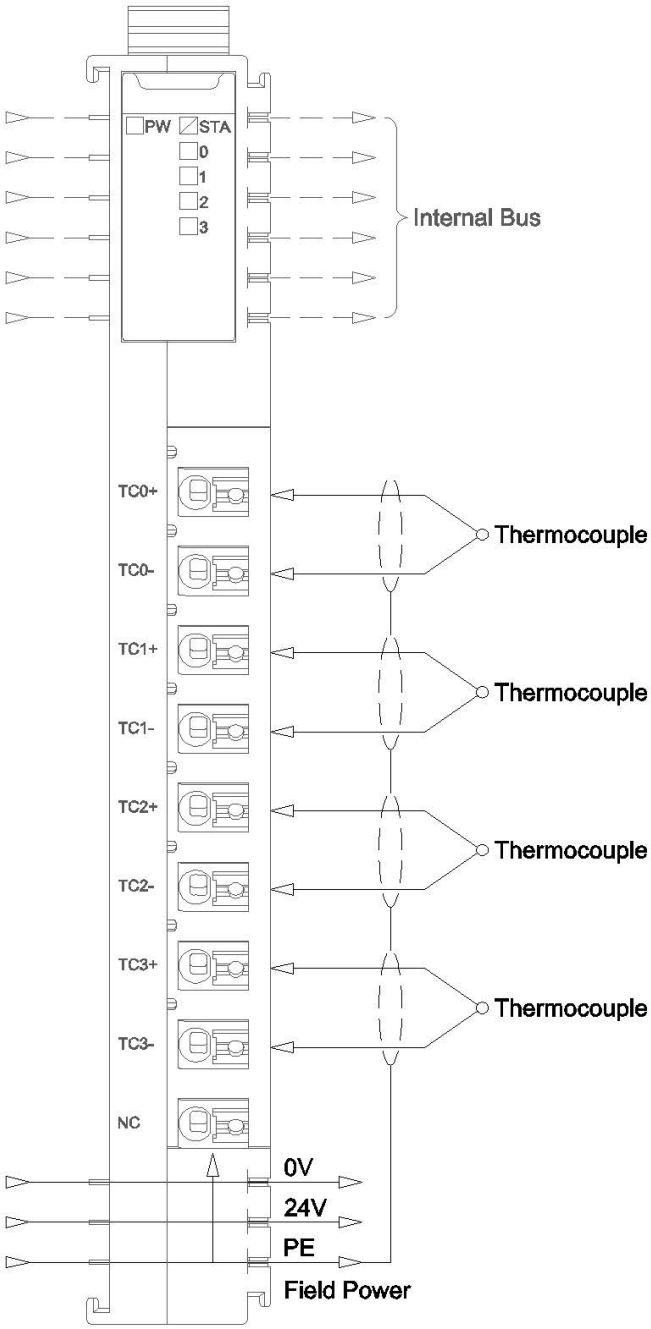
PW
STA
0
1
2
3
Internal Bus
TC0+
TC0-
TC1+
TC1-
TC2+
TC2-
TC3+
TC3-
NC
Thermocouple
Thermocouple
Thermocouple
Thermocouple
0V
24V
PE
Field Power

5 Process data definition

Input Data								
Bit No	Bit 7	Bit 6	Bit 5	Bit 4	Bit 3	Bit 2	Bit 1	Bit 0
Byte 0	Analog Input Data(CH 0)							
Byte 1								
Byte 2	Analog Input Data(CH 1)							
Byte 3								
Byte 4	Analog Input Data(CH 2)							
Byte 5								
Byte 6	Analog Input Data(CH 3)							
Byte 7								

Data description：

Analog Input Data (CH0-3)：The current temperature acquisition value of the corresponding channel

Process Data Definition - J Type			
Temperature	Decimal	Hex	Location
>1360.0	32767	7FFF	Overflow
1360.0	13600	3520	Exceeds the upper limit
.	.	.	
.	.	.	
1200.1	12001	2EE1	
1200.0	12000	2EE0	Rated range
.	.	.	
.	.	.	
-210.0	-2100	F7CC	
<-210.0	-32768	8000	Underflow

Process Data Definition - K Type			
Temperature	Decimal	Hex	Location
>1622.0	32767	7FFF	Overflow
1622.0	16220	3F5C	Exceeds the upper limit
.	.	.	
.	.	.	
1372.1	13721	3599	
1372.0	13720	3598	Rated range
.	.	.	
.	.	.	
-270.0	-2700	F574	
<-270.0	-32768	8000	Underflow

Process Data Definition – E Type			
Temperature	Decimal	Hex	Location
>1200.0	32767	7FFF	Overflow
1200.0	12000	2EE0	Exceeds the upper limit
.	.	.	
.	.	.	
1000.1	10001	2711	
1000.0	10000	2710	Rated range
.	.	.	
.	.	.	
-270.0	-2700	F574	
<-270.0	-32768	8000	Underflow

Process Data Definition –T Type			
Temperature	Decimal	Hex	Location
>540.0	32767	7FFF	Overflow
540.0	5400	1518	Exceeds the upper limit
.	.	.	
.	.	.	
400.1	4001	FA1	
400.0	4000	FA0	Rated range
.	.	.	
.	.	.	
-270.0	-2700	F574	
<-270.0	-32768	8000	Underflow

Process Data Definition –S Type			
Temperature	Decimal	Hex	Location
>1850.0	32767	7FFF	Overflow
1850.0	18500	4844	Exceeds the upper limit
.	.	.	
.	.	.	
1769.1	17691	451B	
1769.0	17690	451A	Rated range
.	.	.	
.	.	.	
-50.0	-500	FE0C	
-50.1	-501	FE0B	Exceeds the lower limit
.	.	.	
.	.	.	
-170.0	-1700	F95C	
<-170.0	-32768	8000	Underflow

Process Data Definition – R Type			
Temperature	Decimal	Hex	Location
>2019.0	32767	7FFF	Overflow
2019.0	20190	4EDE	Exceeds the upper limit
.	.	.	
.	.	.	
1769.1	17691	451B	
1769.0	17690	451A	Rated range
.	.	.	
.	.	.	
-50.0	-500	FE0C	
-50.1	-501	FE0B	Exceeds the lower limit
.	.	.	
.	.	.	
-170.0	-1700	F95C	
<-170.0	-32768	8000	Underflow

Process Data Definition - B Type			
Temperature	Decimal	Hex	Location
>2070.0	32767	7FFF	Overflow
2070.0	20700	50DC	Exceeds the upper limit
.	.	.	
.	.	.	
1820.1	18201	4719	
1820.0	18200	4718	Rated range
.	.	.	
.	.	.	
0.0	0		
<0.0	-32768	8000	Underflow

Process Data Definition – N Type			
Temperature	Decimal	Hex	Location
>1550.0	32767	7FFF	Overflow
1550.0	15500	3C8C	Exceeds the upper limit
.	.	.	
.	.	.	
1300.1	13001	32C9	
1300.0	13000	32C8	Rated range
.	.	.	
.	.	.	
-270.0	-2700	F574	
<-270.0	-32768	8000	Underflow

Process Data Definition – C Type			
Temperature	Decimal	Hex	Location
>2320.0	32767	7FFF	Overflow
2320.0	23200	5AA0	Rated range
.	.	.	
.	.	.	
0.0	0		
<0.0	-32768	8000	Underflow

6 Configuration parameters definition

Configuration Parameter								
Bit No	Bit 7	Bit 6	Bit 5	Bit 4	Bit 3	Bit 2	Bit 1	Bit 0
Byte 0	Reserved							16Bit Data Format
Byte 1	TC Input Type (CH 1)				TC Input Type (CH 0)			
Byte 1	TC Input Type (CH 3)				TC Input Type (CH 2)			

Data description:

16Bit Data Format：Big-endian and little-endian format of data upload:

0：A_B

1：B_A

TC Input Type(CH 0-3)：Sensor type of the channel：

0：Channel is disabled

1：J Type

2：K Type

3：E Type

4：T Type

5：S Type

6：R Type

7：B Type

8：N Type

9：C Type

A Dimension drawing

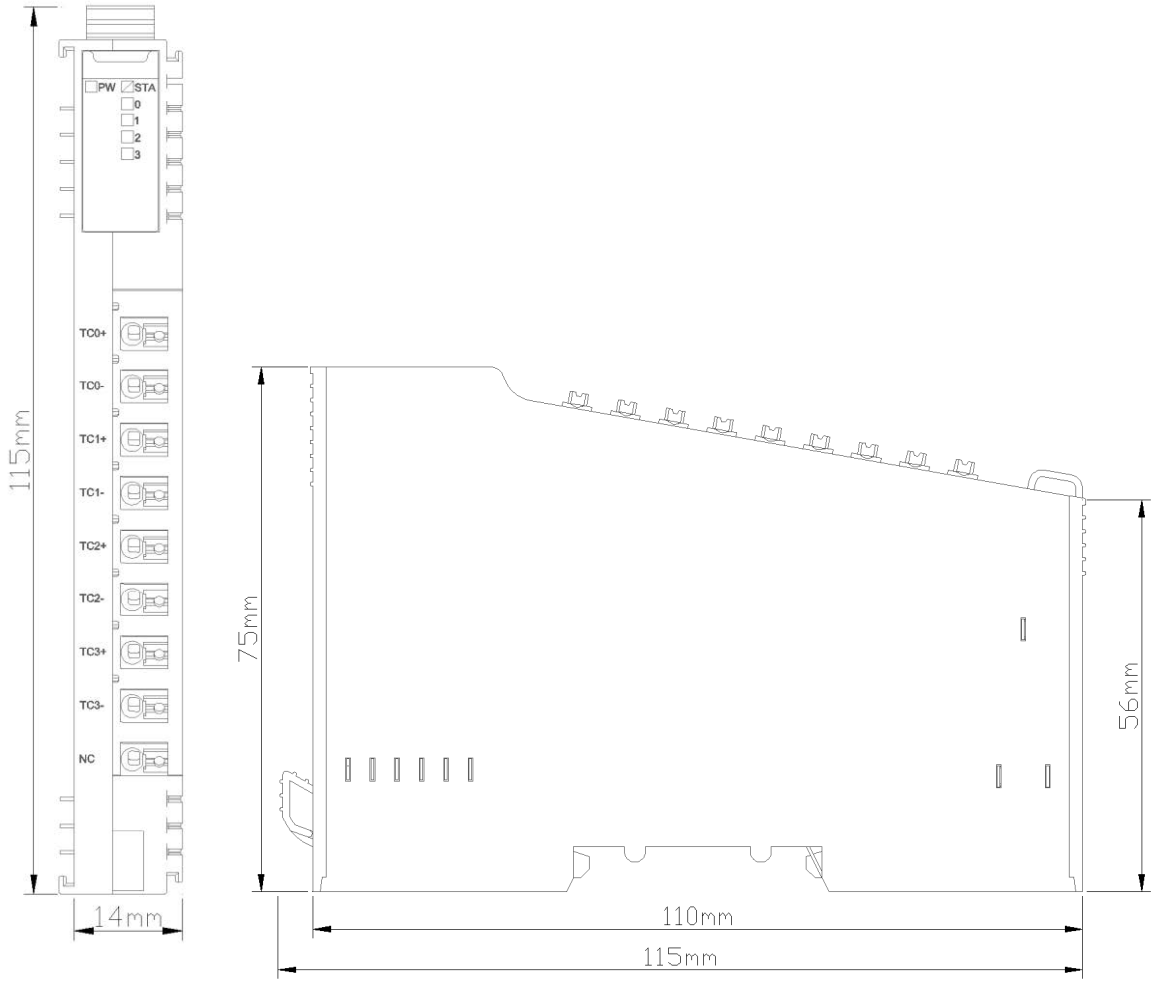

NT-3808: 8 channels Analog Input, Thermocouple （TC- J ,K , E , T , S, R , B , N）types

1 Module features

- ◆ The module supports 8-channel thermocouple signal acquisition
- ◆ The module carries 8 analog LED indicators
- ◆ The module supports 9 kinds of conventional thermocouple temperature measurement type
- ◆ The internal bus of the module and field input adopts magnetic isolation
- ◆ The module input channel supports TVS overvoltage protection
- ◆ 24-bit ADC resolution (Σ-δ type)
- ◆ Fixed Value Parameter

2 Technical parameters

General Parameters		
Power		Max.60mA@5.0Vdc
Isolation		I/O to internal bus: magnetic isolation (2.5KVrms)
Field Power		Not used
Wiring		I/O Wiring：Max.1.0mm² (AWG 17)
Mounting Type		35mmDIN-Rail
Size		115*14*75mm
Weight		65g
Environment Specification		
Operational Temperature		-40~85℃
Operational Humidity		5%~95% RH(No Condensation)
Ingress Protection Rating		IP20
Input Parameter		
Channel Number		8 Channels
LED Indicator		8 Input LED Indicators
Sensor Type		J / K/ E / T / S / R / B / N thermocouples
Acquisition Accuracy		±0.3% Full Scale，@25℃ ±0.5% Full Scale，@-40~85℃
Sampling Rate		70ms/4 channel
Measuring Range℃	J Type	-210~1200℃
	K Type	-270~1370℃
	E Type	-270~1000℃
	T Type	-270~400℃
	S Type	-50~1760℃
	R Type	-50~1760℃
	B Type	0~1820℃
	N Type	-270~1300℃
	C Type	0~2320℃ (not available)
Data Format		16-Bit Signed Integer (Integer)
Diagnostic Function		-32767: No thermocouple model selected (that is, the channel is disabled) 32766：open circuit disconnection 32767：Temperature overflow -32768：Temperature underflow

3 Hardware Interface

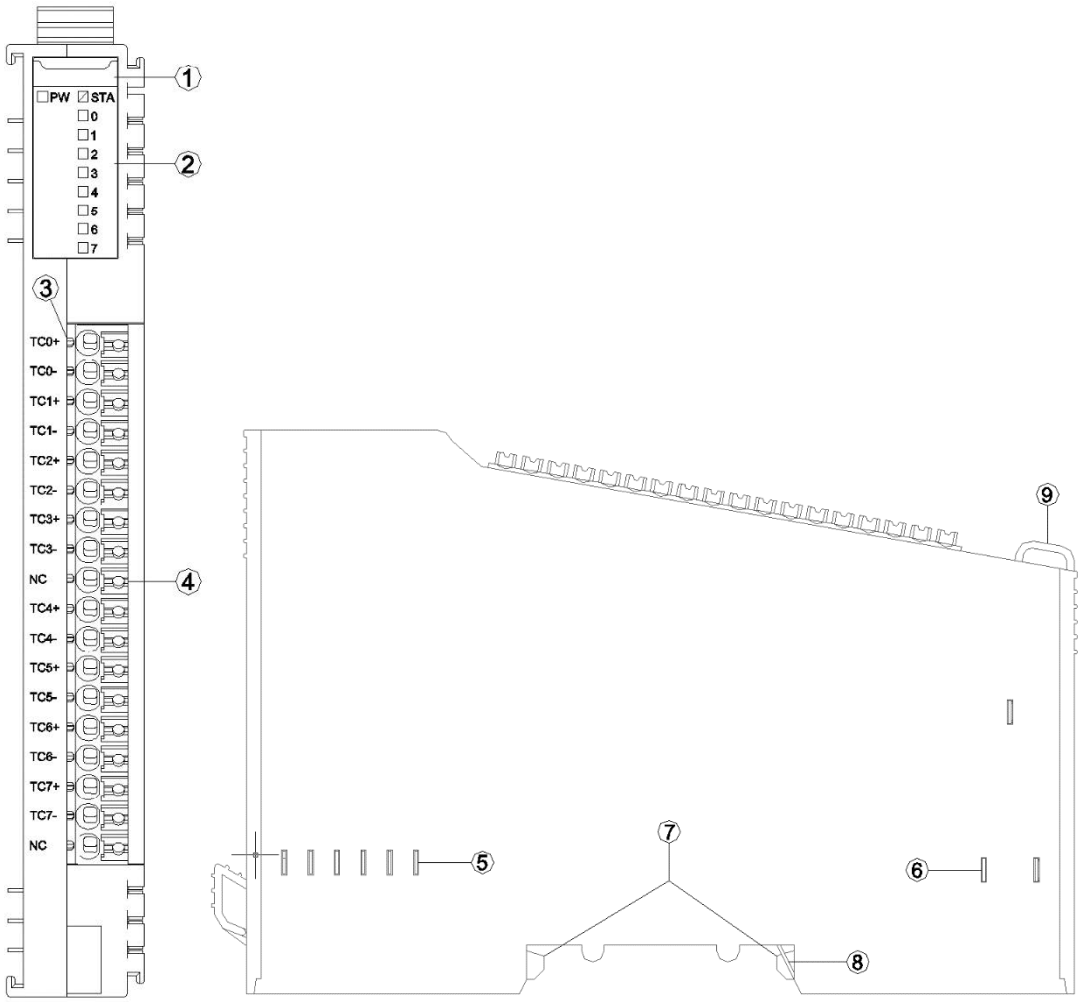

① Module Type

② State indicator

③ N/A

④ Wiring Terminal and identification

⑤ Internal Bus

⑥ Field Power

⑦ Buckle

⑧ Grounding Spring Sheet

⑨ Fixed Wiring Harness

3.1 LED indicator definition

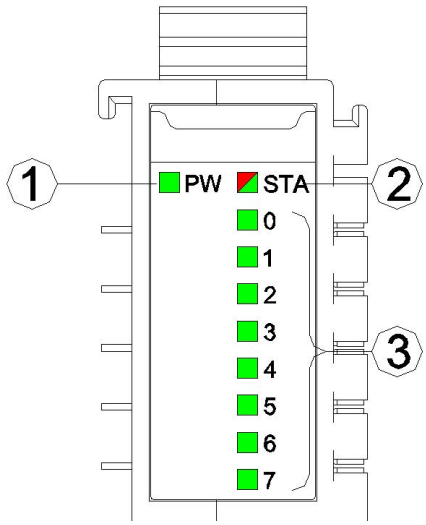

① Power LED indicator (green)

② Module State LED indicator (red/green)

③ Output channel LED indicator (green)

PW POWER STATE (GREEN)	Definition
ON	Internal bus Power Normal
OFF	Internal bus Power Failure
STA MODULE STATE (RED/GREEN)	Definition
Green slow flash (2.5Hz)	Module internal bus is not started
Red slow flash (2.5Hz)	Module internal bus offline
ON (GREEN)	Operation normal
Flash(2.5Hz) (RED/GREEN)	Upgrading mode
Flash(10Hz) (RED/GREEN)	Firmware Update
Double Flash (RED)	Module Exception has been soft-restarted
0-7 Channel Indicator	Definition
ON	The input signal exceeds 1% of the range
OFF	Invalid output signal

3.2 Terminal definition

Terminal Number	Definition	Description
1	TC0+	Signal Input CH0
2	TC0-	
3	TC1+	Signal Input CH1
4	TC1-	
5	TC2+	Signal Input CH2
6	TC2-	
7	TC3+	Signal Input CH3
8	TC3-	
9	NC	Not Connected
10	TC4+	Signal Input CH4
11	TC4-	
12	TC5+	Signal Input CH5
13	TC5-	
14	TC6+	Signal Input CH6
15	TC6-	
16	TC7+	Signal Input CH7
17	TC7-	
18	NC	Not Connected

It is recommended to use cables with cores greater than 0.2mm² and smaller than 1mm².

When connecting cables (terminals)with cores, need to check and connect them according to the corresponding node serial number.

The cold-pressed terminal parameters are as follows:

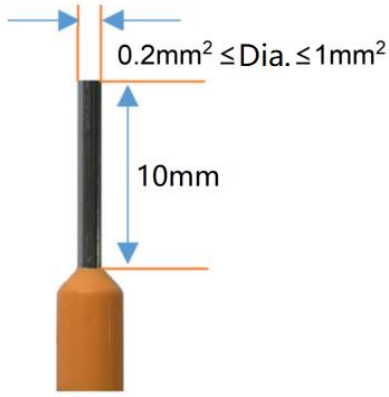

4 Wiring

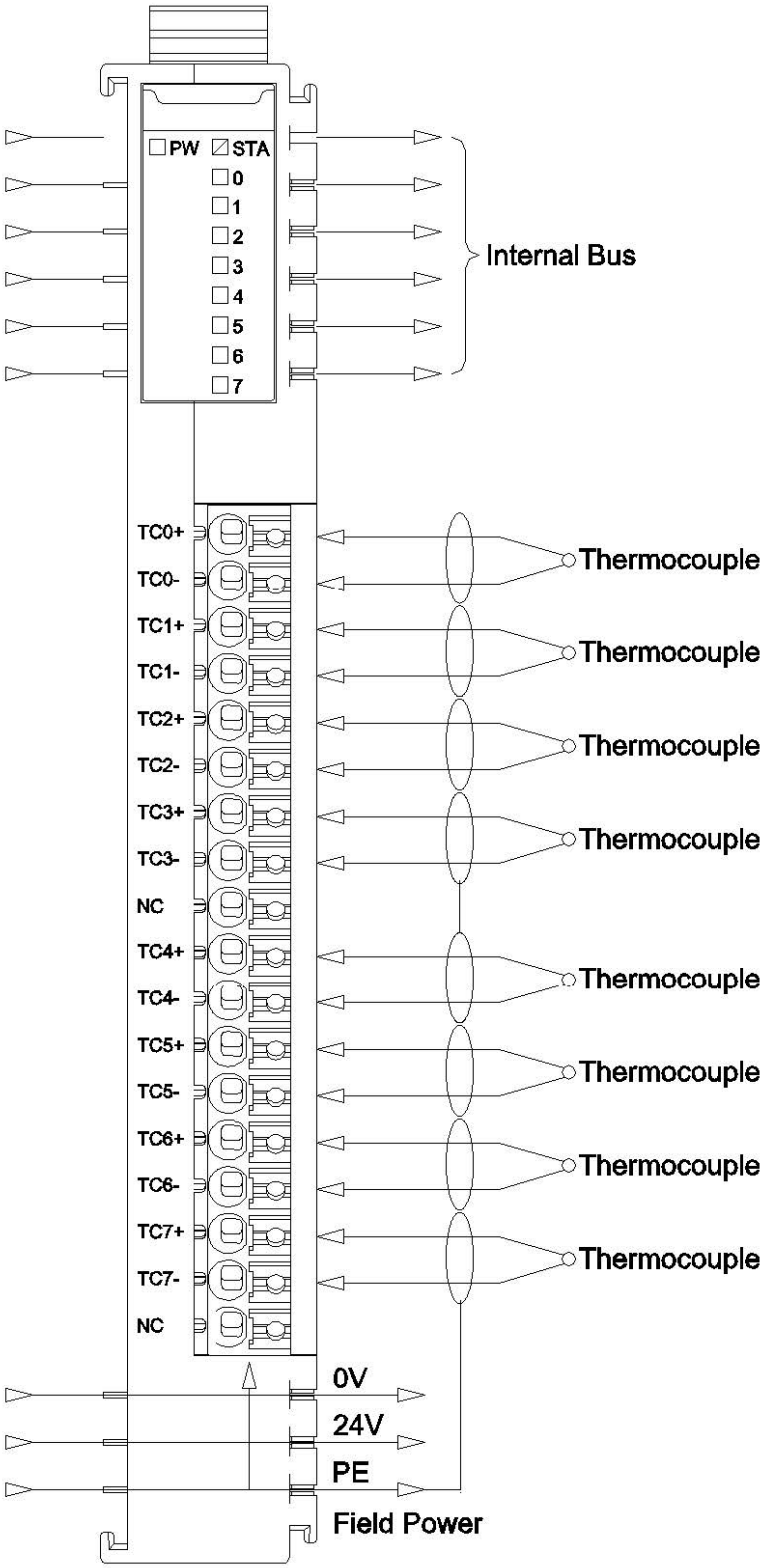
PW
STA
0
1
2
3
4
5
6
7
Internal Bus
TC0+
TC0-
TC1+
TC1-
TC2+
TC2-
TC3+
TC3-
NC
TC4+
TC4-
TC5+
TC5-
TC6+
TC6-
TC7+
TC7-
NC
Thermocouple
Thermocouple
Thermocouple
Thermocouple
Thermocouple
Thermocouple
Thermocouple
Thermocouple
0V
24V
PE
Field Power

5 Process data definition

Input Data								
Bit No	Bit 7	Bit 6	Bit 5	Bit 4	Bit 3	Bit 2	Bit 1	Bit 0
Byte 0	Analog Input Data (CH 0)							
Byte 1								
Byte 2	Analog Input Data (CH 1)							
Byte 3								
Byte 4	Analog Input Data (CH 2)							
Byte 5								
Byte 6	Analog Input Data (CH 3)							
Byte 7								
Byte 8	Analog Input Data (CH 4)							
Byte 9								
Byte 10	Analog Input Data (CH 5)							
Byte 11								
Byte 12	Analog Input Data (CH 6)							
Byte 13								
Byte 14	Analog Input Data (CH 7)							
Byte 15								

Data description：

Analog Input Data (CH0-3)：The current temperature acquisition value of the corresponding channel

Process Data Definition - J Type			
Temperature	Decimal	Hex	Location
>1360.0	32767	7FFF	Overflow
1360.0	13600	3520	Exceeds the upper limit
.	.	.	
.	.	.	
1200.1	12001	2EE1	
1200.0	12000	2EE0	Rated range
.	.	.	
.	.	.	
-210.0	-2100	F7CC	
<-210.0	-32768	8000	Underflow

Process Data Definition - K Type			
Temperature	Decimal	Hex	Location
>1622.0	32767	7FFF	Overflow
1622.0	16220	3F5C	Exceeds the upper limit
.	.	.	
.	.	.	
1372.1	13721	3599	
1372.0	13720	3598	Rated range
.	.	.	
.	.	.	
-270.0	-2700	F574	
<-270.0	-32768	8000	Underflow

Process Data Definition – E Type			
Temperature	Decimal	Hex	Location
>1200.0	32767	7FFF	Overflow
1200.0	12000	2EE0	Exceeds the upper limit
.	.	.	
.	.	.	
1000.1	10001	2711	
1000.0	10000	2710	Rated range
.	.	.	
.	.	.	
-270.0	-2700	F574	
<-270.0	-32768	8000	Underflow

Process Data Definition –T Type			
Temperature	Decimal	Hex	Location
>540.0	32767	7FFF	Overflow
540.0	5400	1518	Exceeds the upper limit
.	.	.	
.	.	.	
400.1	4001	FA1	
400.0	4000	FA0	Rated range
.	.	.	
.	.	.	
-270.0	-2700	F574	
<-270.0	-32768	8000	Underflow

Process Data Definition –S Type			
Temperature	Decimal	Hex	Location
>1850.0	32767	7FFF	Overflow
1850.0	18500	4844	Exceeds the upper limit
.	.	.	
.	.	.	
1769.1	17691	451B	
1769.0	17690	451A	Rated range
.	.	.	
.	.	.	
-50.0	-500	FE0C	
-50.1	-501	FE0B	Exceeds the lower limit
.	.	.	
.	.	.	
-170.0	-1700	F95C	
<-170.0	-32768	8000	Underflow

Process Data Definition – R Type			
Temperature	Decimal	Hex	Location
>2019.0	32767	7FFF	Overflow
2019.0	20190	4EDE	Exceeds the upper limit
.	.	.	
.	.	.	
1769.1	17691	451B	
1769.0	17690	451A	Rated range
.	.	.	
.	.	.	
-50.0	-500	FE0C	
-50.1	-501	FE0B	Exceeds the lower limit
.	.	.	
.	.	.	
-170.0	-1700	F95C	
<-170.0	-32768	8000	Underflow

Process Data Definition - B Type			
Temperature	Decimal	Hex	Location
>2070.0	32767	7FFF	Overflow
2070.0	20700	50DC	Exceeds the upper limit
.	.	.	
.	.	.	
1820.1	18201	4719	
1820.0	18200	4718	Rated range
.	.	.	
.	.	.	
0.0	0		
<0.0	-32768	8000	Underflow

Process Data Definition – N Type			
Temperature	Decimal	Hex	Location
>1550.0	32767	7FFF	Overflow
1550.0	15500	3C8C	Exceeds the upper limit
.	.	.	
.	.	.	
1300.1	13001	32C9	
1300.0	13000	32C8	Rated range
.	.	.	
.	.	.	
-270.0	-2700	F574	
<-270.0	-32768	8000	Underflow

Process Data Definition – C Type			
Temperature	Decimal	Hex	Location
>2320.0	32767	7FFF	Overflow
2320.0	23200	5AA0	Rated range
.	.	.	
.	.		
0.0	0		
<0.0	-32768	8000	Underflow

6 Configuration parameters definition

Configuration Parameter								
Bit No	Bit 7	Bit 6	Bit 5	Bit 4	Bit 3	Bit 2	Bit 1	Bit 0
Byte 0	Reserved							16Bit Data Format
Byte 1	TC Input Type (CH 1)				TC Input Type (CH 0)			
Byte 1	TC Input Type (CH 3)				TC Input Type (CH 2)			

Data description:

16Bit Data Format：Big-endian and little-endian format of data upload:

0：A_B

1：B_A

TC Input Type(CH 0-3)：Sensor type of the channel：

0：Channel is disabled

1：J Type

2：K Type

3：E Type

4：T Type

5：S Type

6：R Type

7：B Type

8：N Type

9：C Type

A Dimension drawing

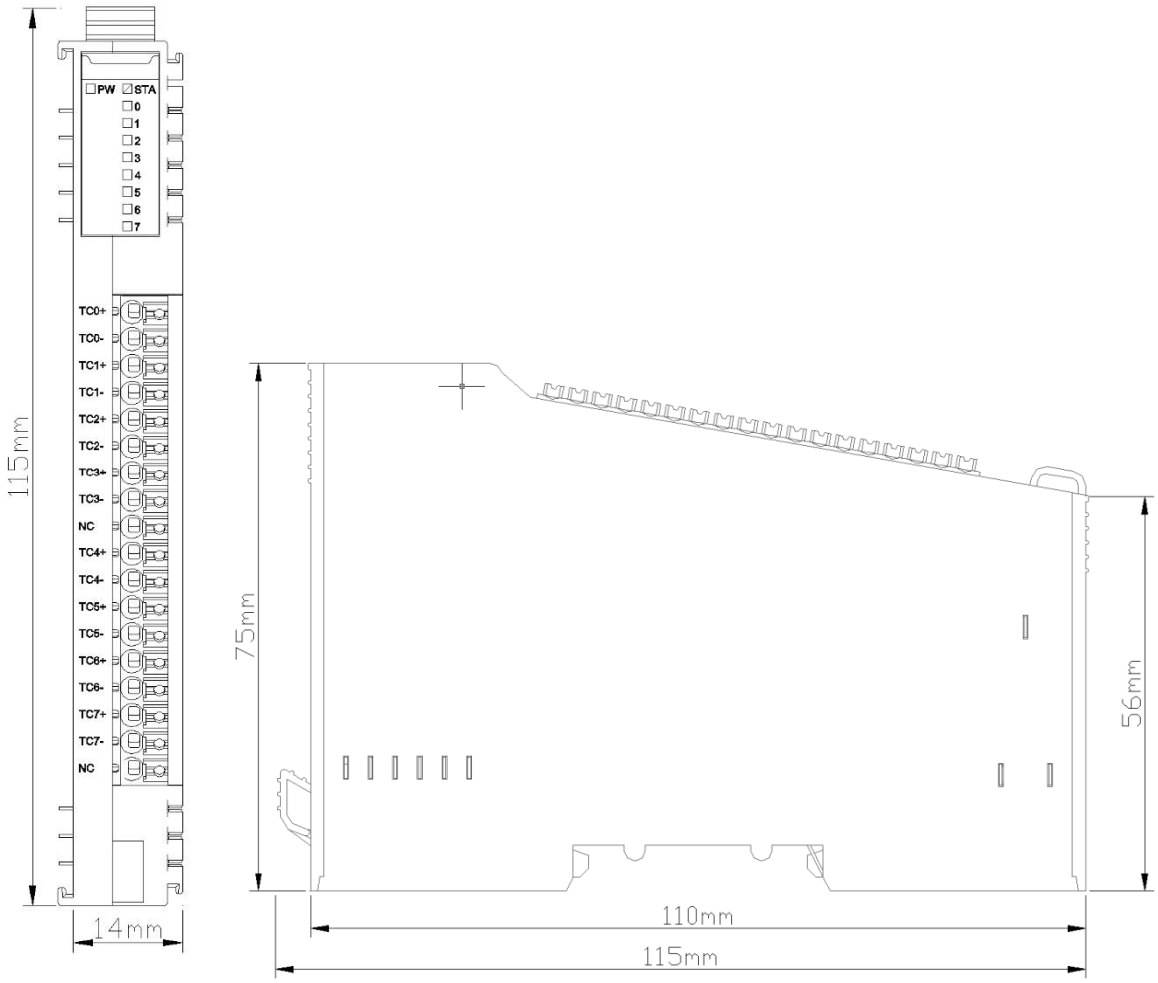

NT-3844 4 channels Analog Input, Thermocouple (TC-J/K/E/T/S/R/B/N Types (filter adjustable

1 Module features

- The module supports 4-channel thermocouple signal acquisition
- The module carries with 4 analog LED indicators
- The module supports 9 kinds of conventional thermocouple temperature measurement type
- The internal bus of the module and field input adopts magnetic isolation
- The module input channel supports TVS overvoltage protection
- 24-bit ADC resolution (Σ-δ type)
- The module supports adjustable filter parameters

2 Technical Parameters

General parameters		
Power		Max.50mA@5.0Vdc
Isolation		I/O to internal bus: magnetic isolation (2.5KVrms)
Field Power		Not used
Wiring		Max.1.0mm² (AWG 17)
Mounting Type		35mmDIN-Rail
Size		115*14*75mm
Weight		65g
Environment Specification		
Operational Temperature		-40~70℃
Operational Humidity		5%~95% RH (No Condensation)
Ingress Protection Rating		IP20
Input Parameter		
Channel Number		4 Channels
LED Indicator		4 Input LED Indicators
Sensor Type		J / K/ E / T / S / R / B / N type thermocouples
Acquisition Accuracy		±0.3% Full Scale，@25℃ ±0.5% Full Scale，@-40~70℃
Sampling Rate		70ms/4 channels
Filter class		Adjustable
Measuring Range ℃	J Type	-210~1200℃
	K Type	-270~1370℃
	E Type	-270~1000℃
	T Type	-270~400℃
	S Type	-50~1760℃
	R Type	-50~1760℃
	B Type	0~1820℃
	N Type	-270~1300℃
Data Format		16-Bit Signed Integer (Integer)
Diagnostic Function		-32767: No thermocouple model selected (that is, the channel is disabled) 32766：open circuit disconnection 32767：Temperature overflow -32768：Temperature underflow 32765: The ADC chip fault 32764: Cold-junction compensation transform fault value

3 Hardware Interface

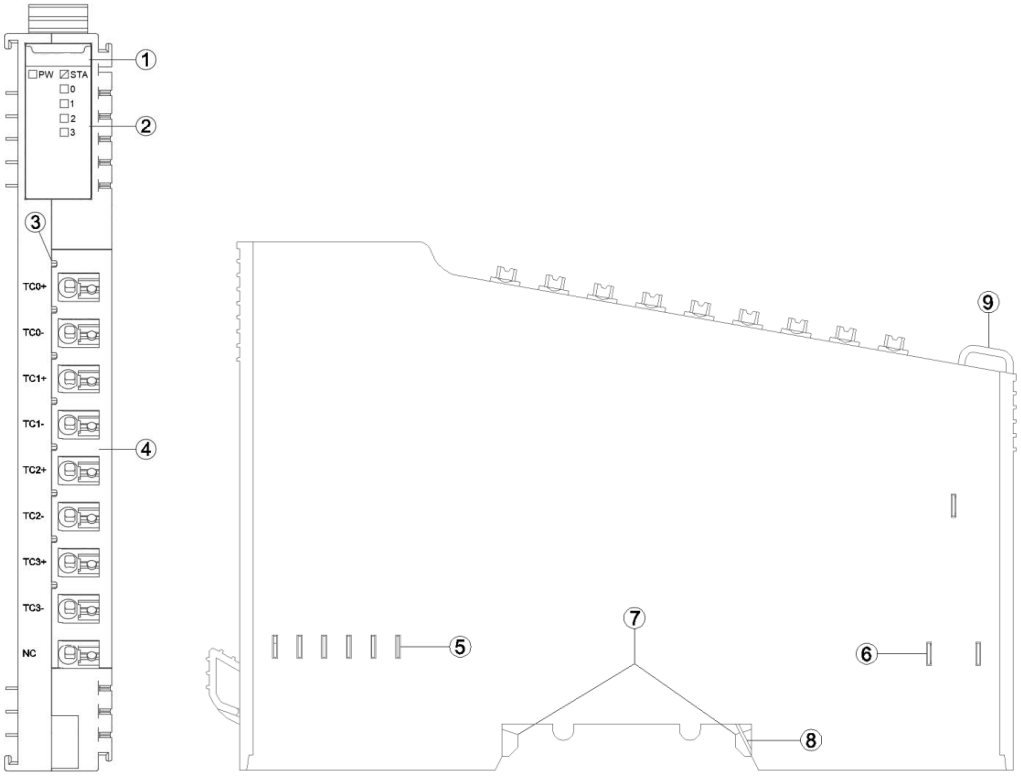

① Module Type

② State indicator

③ N/A

④ Wiring Terminal and identification

⑤ Internal Bus

⑥ Field Power

⑦ Buckle

⑧ Grounding Spring Sheet

⑨ Fixed Wiring Harness

3.1 LED LED indicator definition

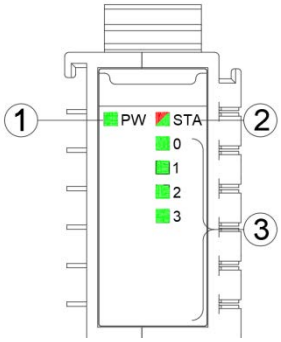

① Power LED indicator (green)

② Module State LED indicator (red/green)

③ Output channel LED indicator (green)

PW POWER STATE (GREEN)	Definition
ON	Internal bus Power Normal
OFF	Internal bus Power Failure
STA MODULE STATE (RED/GREEN)	Definition
Green slow flash (2.5Hz)	Module internal bus is not started
Red slow flash (2.5Hz)	Module internal bus offline
ON (GREEN)	Operation normal
Flash(2.5Hz) (RED/GREEN)	Upgrading mode
Flash(10Hz) (RED/GREEN)	Firmware Update
Double Flash (RED)	Module Exception has been soft-restarted
0-3 Channel Indicator	Definition
ON	The input signal exceeds 1% of the range
OFF	Invalid output signal

3.2 Terminal definition

Terminal Number	Definition	Description
1	TC0+	Signal Input CH0
2	TC0-	
3	TC1+	Signal Input CH1
4	TC1-	
5	TC2+	Signal Input CH2
6	TC2-	
7	TC3+	Signal Input CH3
8	TC3-	
9	NC	Not Connected

It is recommended to use cables with cores greater than 0.2mm² and smaller than 1mm².

When connecting cables (terminals)with cores, need to check and connect them according to the corresponding node serial number.

The cold-pressed terminal parameters are as follows:

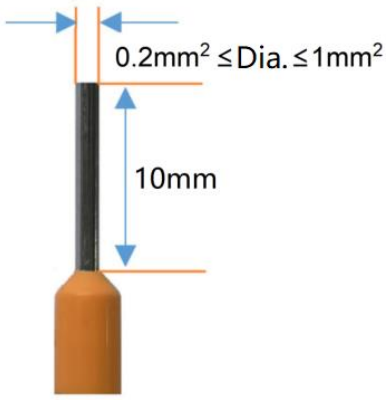

4 Wiring

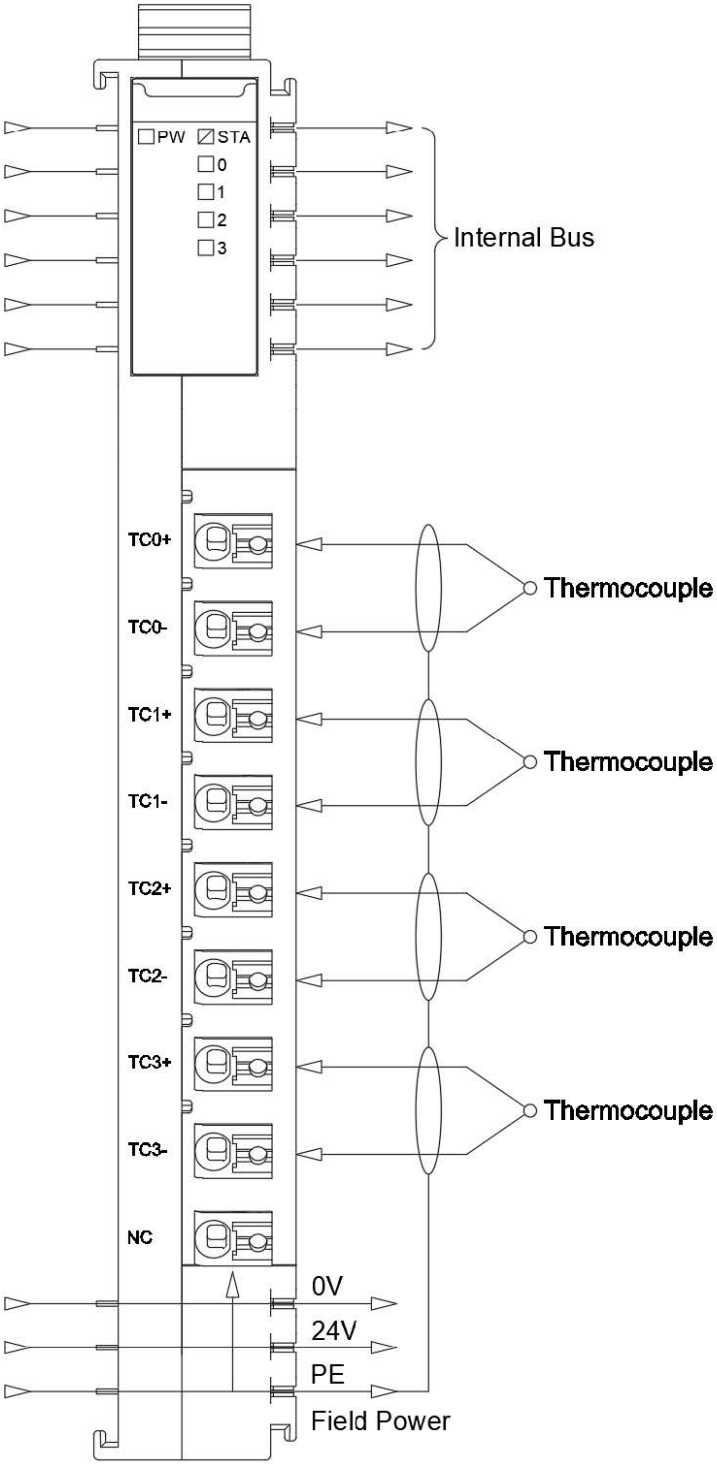
PW
STA
0
1
2
3
Internal Bus
TC0+
TC0-
TC1+
TC1-
TC2+
TC2-
TC3+
TC3-
NC
Thermocouple
Thermocouple
Thermocouple
Thermocouple
0V
24V
PE
Field Power

5 Process data definition

Input Data								
Bit No	Bit 7	Bit 6	Bit 5	Bit 4	Bit 3	Bit 2	Bit 1	Bit 0
Byte 0	Analog Input Data (CH 0)							
Byte 1								
Byte 2	Analog Input Data (CH 1)							
Byte 3								
Byte 4	Analog Input Data (CH 2)							
Byte 5								
Byte 6	Analog Input Data (CH 3)							
Byte 7								

Data description：

Analog Input Data (CH0-3)：The current temperature acquisition value of the corresponding channel

Process Data Definition - J Type			
Temperature	Decimal	Hex	Location
>1360.0	32767	7FFF	Overflow
1360.0	13600	3520	Exceeds the upper limit
.	.	.	
.	.	.	
1200.1	12001	2EE1	
1200.0	12000	2EE0	Rated range
.	.	.	
.	.	.	
-210.0	-2100	F7CC	
<-210.0	-32768	8000	Underflow

Process Data Definition - K Type			
Temperature	Decimal	Hex	Location
>1622.0	32767	7FFF	Overflow
1622.0	16220	3F5C	Exceeds the upper limit
.	.	.	
.	.	.	
1372.1	13721	3599	
1372.0	13720	3598	Rated range
.	.	.	
.	.	.	
-270.0	-2700	F574	
<-270.0	-32768	8000	Underflow

Process Data Definition – E Type			
Temperature	Decimal	Hex	Location
>1200.0	32767	7FFF	Overflow
1200.0	12000	2EE0	Exceeds the upper limit
.	.	.	
.	.	.	
1000.1	10001	2711	
1000.0	10000	2710	Rated range
.	.	.	
.	.	.	
-270.0	-2700	F574	
<-270.0	-32768	8000	Underflow

Process Data Definition – T Type			
Temperature	Decimal	Hex	Location
>500.0	32767	7FFF	Overflow
500	5000	1388	Exceeds the upper limit
.	.	.	
.	.	.	
400.1	4001	FA1	
400.0	4000	FA0	Rated range
.	.	.	
.	.	.	
-270.0	-2700	F574	
<-270.0	-32768	8000	Underflow

Process Data Definition – S Type			
Temperature	Decimal	Hex	Location
>1800.0	32767	7FFF	Overflow
1800	18000	4650	Exceeds the upper limit
.	.	.	
.	.	.	
1760.1	17601	44C1	
1760.0	17600	44C0	Rated range
.	.	.	
.	.	.	
-50.0	-500	FE0C	
-50.1	-501	FE0B	Exceeds the lower limit
.	.	.	
.	.	.	
-110	-1100	FBB4	
<-110.0	-32768	8000	Underflow

Process Data Definition – R Type			
Temperature	Decimal	Hex	Location
>1940.0	32767	7FFF	Overflow
1940	19400	4BC8	Exceeds the upper limit
.	.	.	
.	.	.	
1760.1	17601	44C1	
1760.0	17600	44C0	Rated range
.	.	.	
.	.	.	
-50.0	-500	FE0C	
-50.1	-501	FE0B	Exceeds the lower limit
.	.	.	
.	.	.	
-110	-1100	FBB4	
<-110.0	-32768	8000	Underflow

Process Data Definition – B Type			
Temperature	Decimal	Hex	Location
>2070.0	32767	7FFF	Overflow
2070.0	20700	50DC	Exceeds the upper limit
.	.	.	
.	.	.	
1820.1	18201	4719	
1820.0	18200	4718	Rated range
.	.	.	
.	.	.	
100	1000	03C8	
<100.0	-32768	8000	Underflow

Process Data Definition – N Type			
Temperature	Decimal	Hex	Location
>1550.0	32767	7FFF	Overflow
1550.0	15500	3C8C	Exceeds the upper limit
.	.	.	
.	.	.	
1300.1	13001	32C9	
1300.0	13000	32C8	Rated range
.	.	.	
.	.	.	
-270.0	-2700	F574	
<-270.0	-32768	8000	Underflow

6 Configuration parameters definition

Configuration Parameter								
Bit No	Bit 7	Bit 6	Bit 5	Bit 4	Bit 3	Bit 2	Bit 1	Bit 0
Byte 0	Reserved					Temperature Unit		16Bit Data Format
Byte 1	CJC Model (CH 3)		CJC Model (CH 2)		CJC Model (CH 1)		CJC Model (CH 0)	
Byte 2	TC Input Type (CH 1)				TC Input Type (CH 0)			
Byte 3	TC Input Type (CH 3)				TC Input Type (CH 2)			
Byte 4	Filtering Level (CH 1)				Filtering Level (CH 0)			
Byte 5	Filtering Level (CH 3)				Filtering Level (CH 2)			

Data description：

16Bit Data Format：Big-endian and little-endian format of data upload

0：A_B

1：B_A

Temperature Unit：（Default：0）

0：Degrees Celsius℃

1：Fahrenheit℉

2：Kelvin (K-)

CJC Model(CH 0-3)：cold junction compensation mode（Default：0）

0：Internal reference junction

1：Fixed reference temperature. 0℃

TC Input Type(CH 0-3)：Sensor type of the channel（Default：0：N/A）

0：N/A

1：J type

2：K type

3：E type

4：T type

5：S type

6：R type

7：B type

8：N type

Filtering Level Ch（0-3)：Filter level (Default：4)

0：Level 0

1：Level 1

2：Level 2

3：Level 3

4：Level 4

5：Level 5

6：Level 6

7：Level 7

8：Level 8

9：Level 9

10：Level 10

11：Level 11

12：Level 12

A Dimension drawing

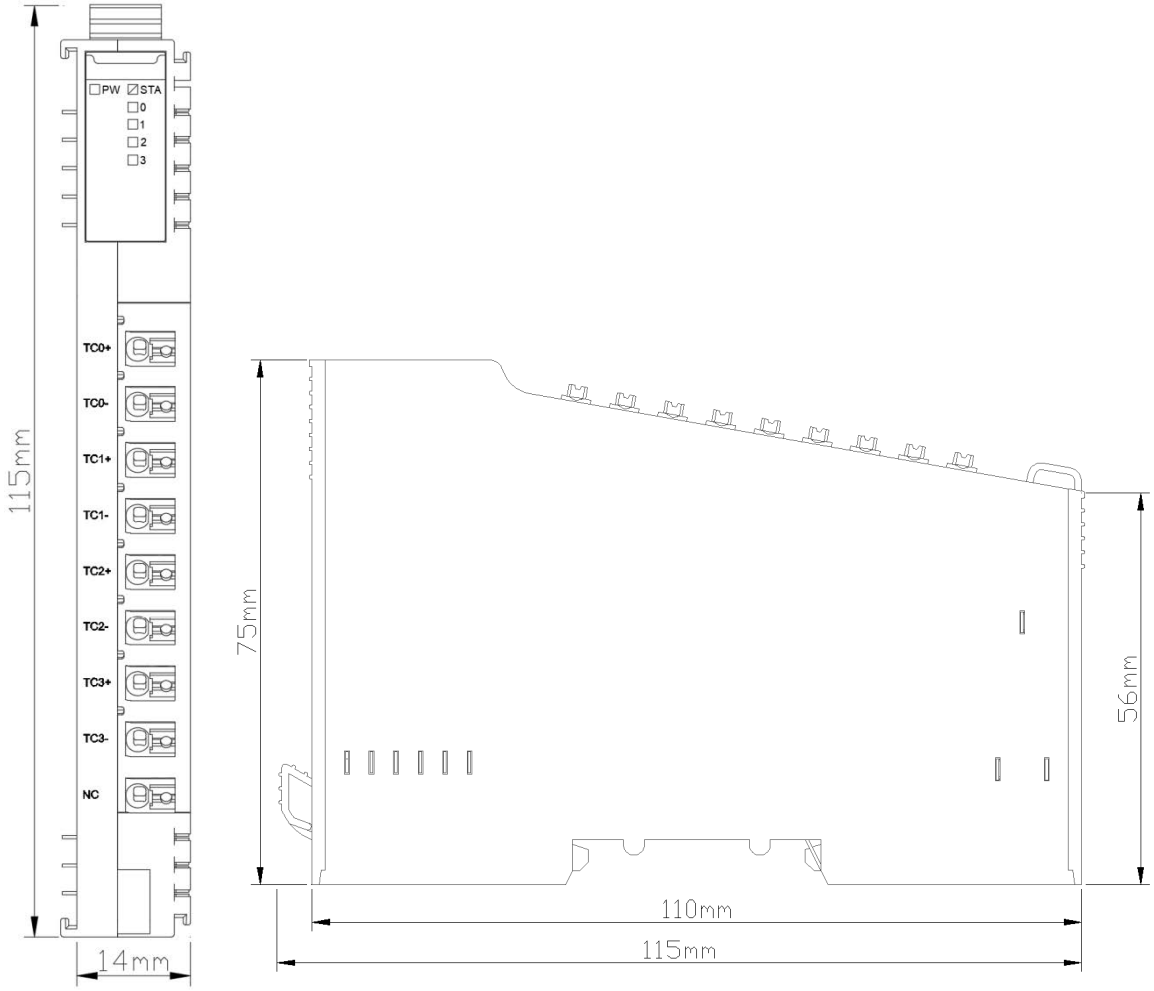

NT-3848 8 channels Analog Input Thermocouple (TC-J/K/E/T/S/R/B/N types (filter adjustable

1 Module features

- The module supports 8-channel thermocouple signal acquisition
- The module carries with 8analog LED indicators
- The module supports 9 kinds of conventional thermocouple temperature measurement type
- The internal bus of the module and field input adopts magnetic isolation
- The module input channel supports TVS overvoltage protection
- 24-bit ADC resolution (Σ-δ type)
- The module supports adjustable filter parameters

2 Technical Parameters

NT-3848 General parameters		
Power		Max.60mA@5.0Vdc
Isolation		I/O to internal bus：magnetic isolation (2.5KVrms)
Field Power		Not used
Wiring		Max.1.0mm² (AWG 17)
Mounting Type		35mm Din-Rail
Size		115*14*75mm
Weight		65g
Environment Specification		
Operational Temperature		-40~70℃
Operational Humidity		5%~95% RH (No Condensation)
Ingress Protection Rating		IP20
Input Parameter		
Channel Number		8 Channels
LED Indicator		8 Input LED Indicators
Sensor Type		J / K/ E / T / S / R / B / N thermocouples
Acquisition Accuracy		±0.3% Full Scale，@25℃ ±0.5% Full Scale，@-40~70℃
Sampling Rate		70ms/4 channel
Filter Level		Adjustable
Measuring Range ℃	J type	-210~1200℃
	K type	-270~1370℃
	E type	-270~1000℃
	T type	-270~400℃
	S type	-50~1760℃
	R type	-50~1760℃
	B type	0~1820℃
	N type	-270~1300℃
Data Format		16-Bit Signed Integer (Integer)
Diagnostic Function		-32767：No thermocouple model selected (that is, the channel is disabled) 32766：open circuit disconnection 32767：Temperature overflow -32768：Temperature underflow 32765：The ADC chip fault 32764：Cold-junction compensation transform fault value

3 Hardware Interface

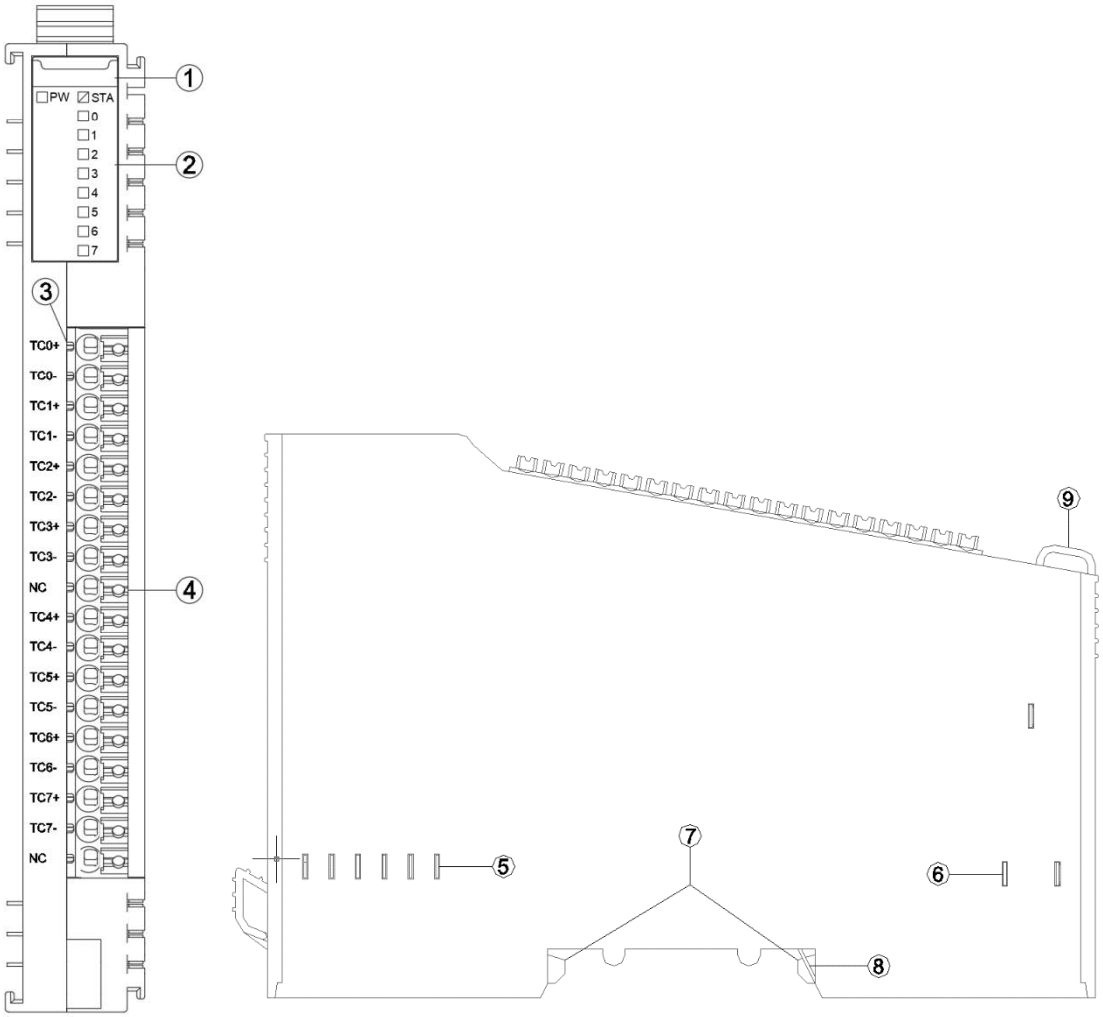

① Module Type

② State indicator

③ N/A

④ Wiring Terminal and identification

⑤ Internal Bus

⑥ Field Power

⑦ Buckle

⑧ Grounding Spring Sheet

⑨ Fixed Wiring Harness

3.1 LED Indicator definition

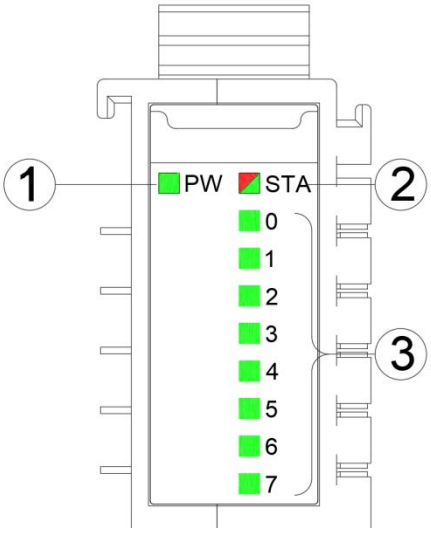

① Power LED indicator (green)

② Module State LED indicator (red/green)

③ Output channel LED indicator (green)

PW POWER STATE (GREEN)	Definition
ON	Internal bus Power Normal
OFF	Internal bus Power Failure
STA MODULE STATE (RED/GREEN)	Definition
Green slow flash (2.5Hz)	Module internal bus is not started
Red slow flash (2.5Hz)	Module internal bus offline
ON (GREEN)	Operation normal
Flash(2.5Hz) (RED/GREEN)	Upgrading mode
Flash(10Hz) (RED/GREEN)	Firmware Update
Double Flash (RED)	Module Exception, has been soft-restarted
0-7 Channel Indicator	Definition
ON	The input signal exceeds 1% of the range
OFF	Invalid output signal

3.2 Terminal definition

Terminal Number	Definition	Description
1	TC0+	Signal Input CH0
2	TC0-	
3	TC1+	Signal Input CH1
4	TC1-	
5	TC2+	Signal Input CH2
6	TC2-	
7	TC3+	Signal Input CH3
8	TC3-	
9	NC	Not connected
10	TC4+	Signal Input CH4
11	TC4-	
12	TC5+	Signal Input CH5
13	TC5-	
14	TC6+	Signal Input CH6
15	TC6-	
16	TC7+	Signal Input CH7
17	TC7-	
18	NC	Not connected

It is recommended to use cables with cores greater than 0.2mm² and smaller than 1mm².

When connecting cables (terminals)with cores, need to check and connect them according to the corresponding node serial number.

The cold-pressed terminal parameters are as follows:

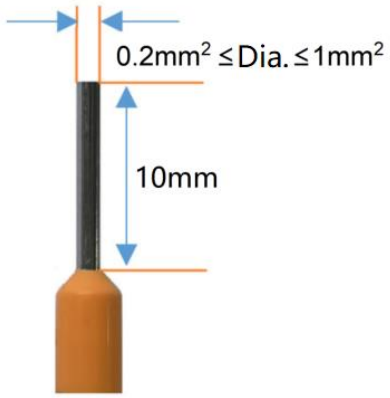

4 Wiring

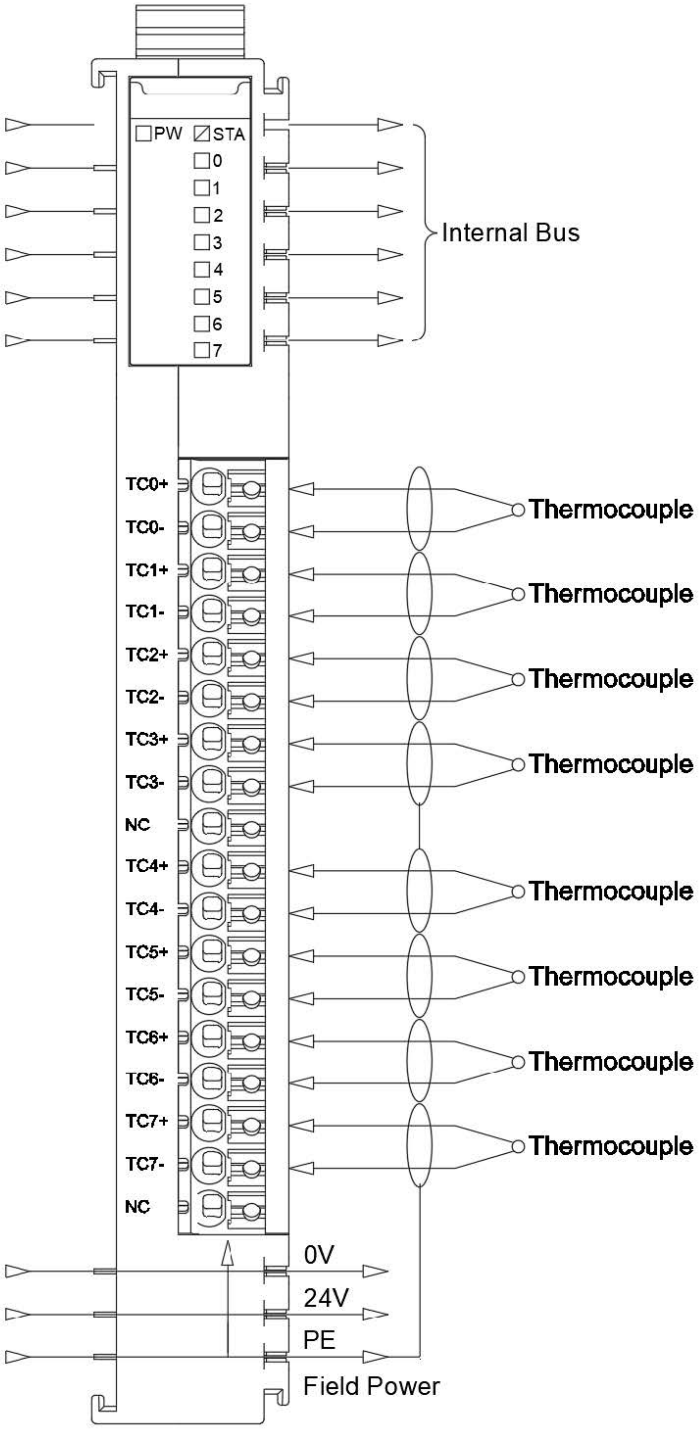
PW
STA
0
1
2
3
4
5
6
7
Internal Bus
TC0+
TC0-
TC1+
TC1-
TC2+
TC2-
TC3+
TC3-
NC
TC4+
TC4-
TC5+
TC5-
TC6+
TC6-
TC7+
TC7-
NC
Thermocouple
Thermocouple
Thermocouple
Thermocouple
Thermocouple
Thermocouple
Thermocouple
Thermocouple
0V
24V
PE
Field Power

5 Process data definition

Input Data								
Bit No	Bit 7	Bit 6	Bit 5	Bit 4	Bit 3	Bit 2	Bit 1	Bit 0
Byte 0	Analog Input Data (CH 0)							
Byte 1								
Byte 2	Analog Input Data (CH 1)							
Byte 3								
Byte 4	Analog Input Data (CH 2)							
Byte 5								
Byte 6	Analog Input Data (CH 3)							
Byte 7								
Byte 8	Analog Input Data (CH 4)							
Byte 9								
Byte 10	Analog Input Data (CH 5)							
Byte 11								
Byte 12	Analog Input Data (CH 6)							
Byte 13								
Byte 14	Analog Input Data (CH 7)							
Byte 15								

Data description：

Analog Input Data (CH0-3)：The current temperature acquisition value of the corresponding channel

Process Data Definition - J Type			
Temperature	Decimal	Hex	Location
>1360.0	32767	7FFF	Overflow
1360.0	13600	3520	Exceeds the upper limit
.	.	.	
.	.	.	
1200.1	12001	2EE1	
1200.0	12000	2EE0	Rated range
.	.	.	
.	.	.	
-210.0	-2100	F7CC	
<-210.0	-32768	8000	Underflow

Process Data Definition - K Type			
Temperature	Decimal	Hex	Location
>1622.0	32767	7FFF	Overflow
1622.0	16220	3F5C	Exceeds the upper limit
.	.	.	
.	.	.	
1372.1	13721	3599	
1372.0	13720	3598	Rated range
.	.	.	
.	.	.	
-270.0	-2700	F574	
<-270.0	-32768	8000	Underflow

Process Data Definition – E Type			
Temperature	Decimal	Hex	Location
>1200.0	32767	7FFF	Overflow
1200.0	12000	2EE0	Exceeds the upper limit
.	.	.	
.	.	.	
1000.1	10001	2711	
1000.0	10000	2710	Rated range
.	.	.	
.	.	.	
-270.0	-2700	F574	
<-270.0	-32768	8000	Underflow

Process Data Definition – T Type			
Temperature	Decimal	Hex	Location
>500.0	32767	7FFF	Overflow
500	5000	1388	Exceeds the upper limit
.	.	.	
.	.	.	
400.1	4001	FA1	
400.0	4000	FA0	Rated range
.	.	.	
.	.	.	
-270.0	-2700	F574	
<-270.0	-32768	8000	Underflow

Process Data Definition – S Type			
Temperature	Decimal	Hex	Location
>1800.0	32767	7FFF	Overflow
1800	18000	4650	Exceeds the upper limit
.	.	.	
.	.	.	
1760.1	17601	44C1	
1760.0	17600	44C0	Rated range
.	.	.	
.	.	.	
-50.0	-500	FE0C	
-50.1	-501	FE0B	Exceeds the lower limit
.	.	.	
.	.	.	
-110	-1100	FBB4	
<-110.0	-32768	8000	Underflow

Process Data Definition – R Type			
Temperature	Decimal	Hex	Location
>1940.0	32767	7FFF	Overflow
1940	19400	4BC8	Exceeds the upper limit
.	.	.	
.	.	.	
1760.1	17601	44C1	
1760.0	17600	44C0	Rated range
.	.	.	
.	.	.	
-50.0	-500	FE0C	
-50.1	-501	FE0B	Exceeds the lower limit
.	.	.	
.	.	.	
-110	-1100	FBB4	
<-110.0	-32768	8000	Underflow

Process Data Definition – B Type			
Temperature	Decimal	Hex	Location
>2070.0	32767	7FFF	Overflow
2070.0	20700	50DC	Exceeds the upper limit
.	.	.	
.	.	.	
1820.1	18201	4719	
1820.0	18200	4718	Rated range
.	.	.	
.	.	.	
100	1000	03C8	
<100.0	-32768	8000	Underflow

Process Data Definition – N Type			
Temperature	Decimal	Hex	Location
>1550.0	32767	7FFF	Overflow
1550.0	15500	3C8C	Exceeds the upper limit
.	.	.	
.	.	.	
1300.1	13001	32C9	
1300.0	13000	32C8	Rated range
.	.	.	
.	.	.	
-270.0	-2700	F574	
<-270.0	-32768	8000	Underflow

6 Configuration parameters definition

Configuration parameters								
Bit No	Bit 7	Bit 6	Bit 5	Bit 4	Bit 3	Bit 2	Bit 1	Bit 0
Byte 0	Reserved					Temperature Unit		16Bit Data Format
Byte 1	CJC Model (CH 3)		CJC Model (CH 2)		CJC Model (CH 1)		CJC Model (CH 0)	
Byte 2	CJC Model		CJC Model		CJC Model		CJC Model	

	(CH 7)	(CH 6)	(CH 5)	(CH 4)
Byte 3	TC Input Type (CH 1)		TC Input Type (CH 0)	
Byte 4	TC Input Type (CH 3)		TC Input Type (CH 2)	
Byte 5	TC Input Type (CH 5)		TC Input Type (CH 4)	
Byte 6	TC Input Type (CH 7)		TC Input Type (CH 6)	
Byte 7	Filtering Level (CH 1)		Filtering Level (CH 0)	
Byte 8	Filtering Level (CH 3)		Filtering Level (CH 2)	
Byte 9	Filtering Level (CH 5)		Filtering Level (CH 4)	
Byte 10	Filtering Level (CH 7)		Filtering Level (CH 6)	

Data description：

16Bit Data Format：Big-endian and little-endian format of data upload

0：A_B

1：B_A

Temperature Unit：（Default：0）

0：Degrees Celsius℃

1：Fahrenheit℉

2：Kelvin (K-)

CJC Model(CH 0-7)：cold junction compensation mode（Default：0）

0：Internal reference junction

1：Fixed reference temperature. 0℃

TC Input Type(CH 0-7)：Sensor type of the channel（Default ：0：N/A）

0：N/A

1：J type

2：K type

3：E type

4：T type

5：S type

6：R type

7：B type

8：N type

Filtering Level Ch（0-7)：Filter Level (Default：4)

0：Level 0

1：Level 1

2：Level 2

3：Level 3

4：Level 4

5：Level 5

6：Level 6

7：Level 7

8：Level 8

9：Level 9

10：Level 10

11：Level 11

12：Level 12

A Dimension drawing

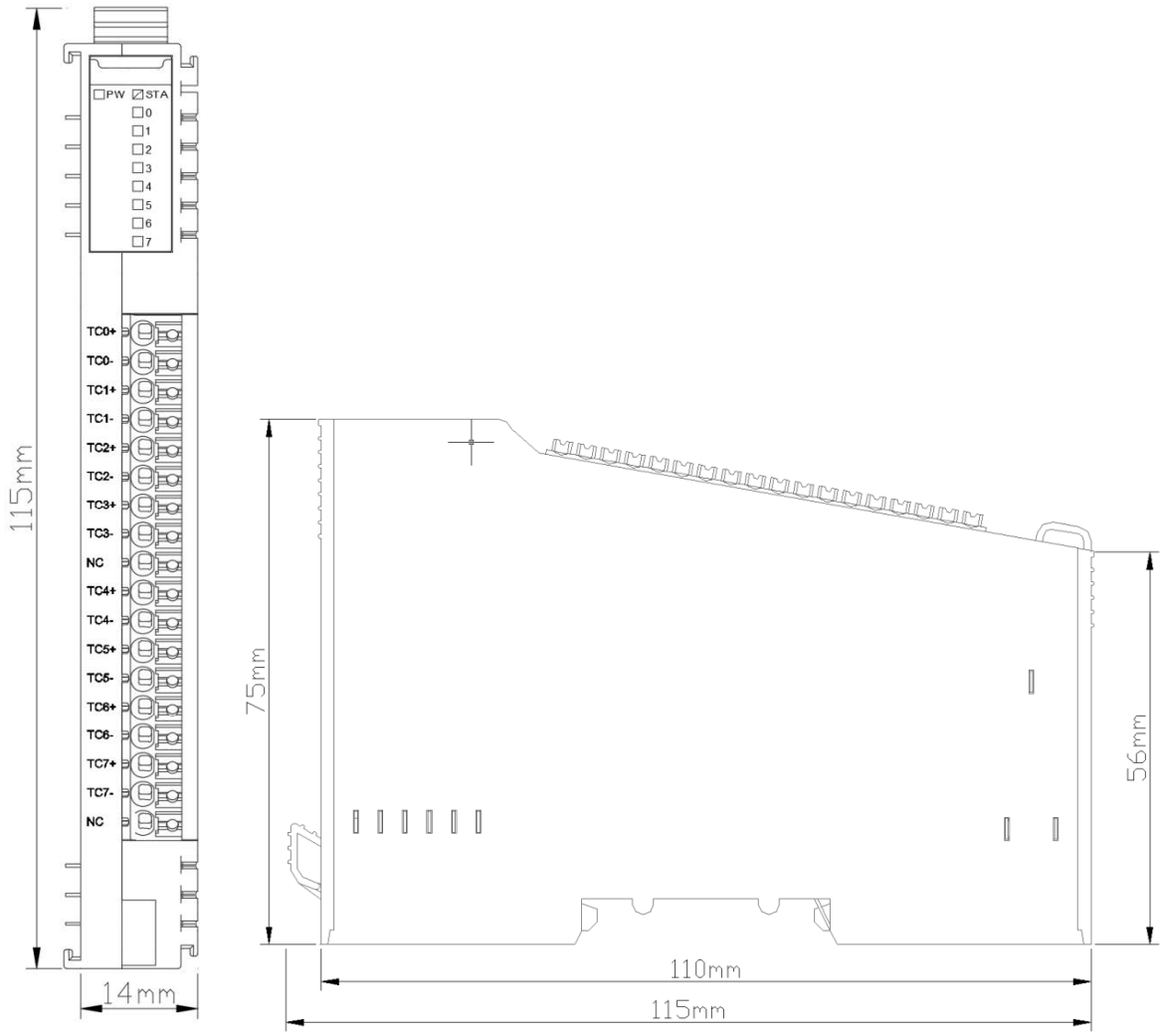

NT-4154 4 channels Voltage Output

0~5VDC/0~10VDC/±5VDC/±10VDC,16 bits

1 Module features

- ◆The module supports 4 channels voltage signal output
- ◆ Output range：0~5VDC, 0~10VDC, ±5VDC, ±10VDC, 16 bits
- ◆ The module carries with 4 analog output LED indicators
- ◆ Module output signal is single - ended common - grounded output

2 Technical Parameters

General parameters	
Power	Max.500mA@5.0Vdc
Isolation	I/O to internal bus: magnetic isolation (3KVrms)
Field Power	Not used
Wiring	Max.1.0mm² (AWG 17)
Mounting Type	35mmDIN-Rail
Size	115*14*75mm
Weight	65g
Environment Specification	
Operational Temperature	-40~85°C
Operational Humidity	5%~95% RH (No Condensation)
Ingress Protection Rating	IP20
Output Parameter	
Channel Number	4 Channels voltage output
LED Indicator	4 Channels voltage output indicator
Output Voltage Range	0~5VDC、0~10VDC、±5VDC、±10VDC
Load Resistance	Max.5kΩ
Resolution	16 bits
Acquisition Accuracy	±0.1% (Full Scale) @25°C ±0.3(Full Scale) @-40~85°C
Conversion Time	1 ms / all channels
Diagnose	Overtemperature/overcurrent status monitoring
Protection Current	20mA.
Common Port	Common grounded output

3 Hardware Interface

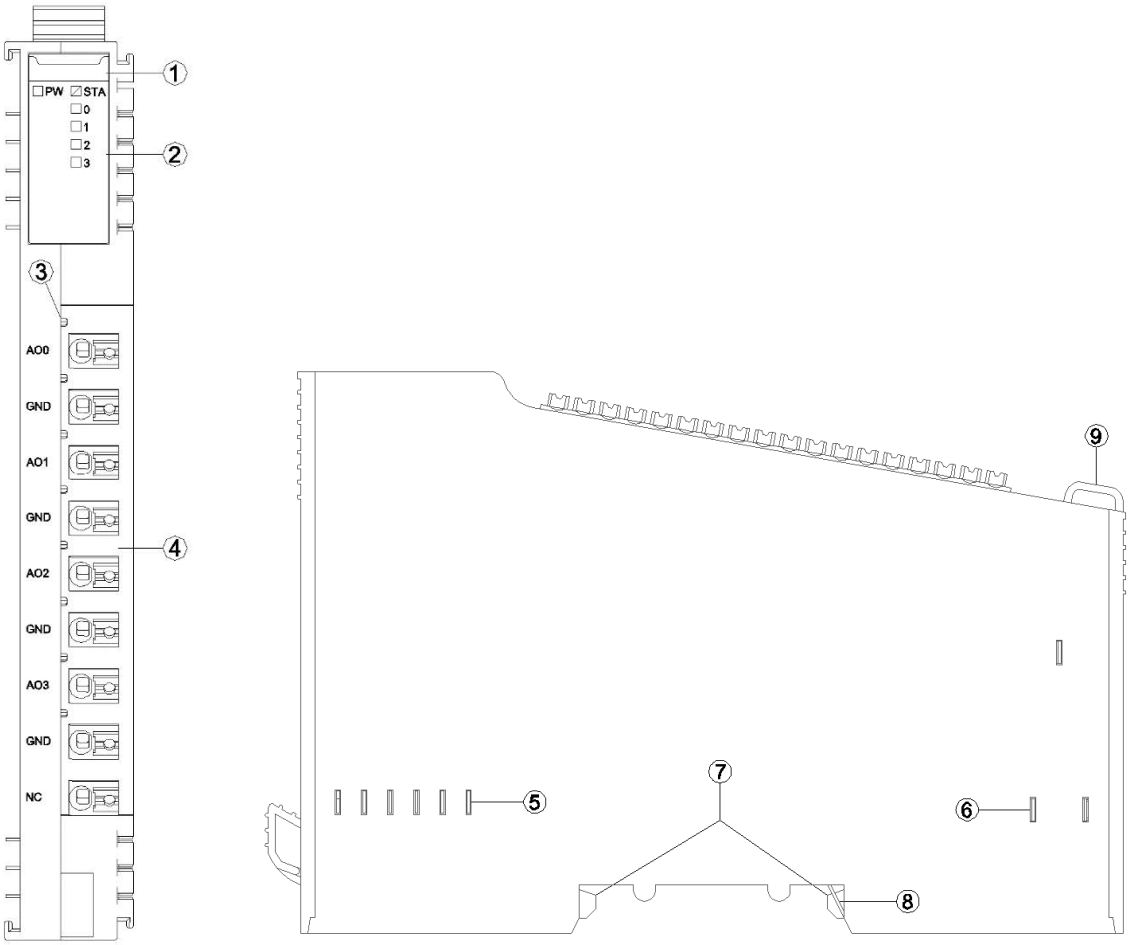

① Module Type

② State indicator

③ N/A

④ Wiring Terminal and identification

⑤ Internal Bus

⑥ Field Power

⑦ Buckle

⑧ Grounding Spring Sheet

⑨ Fixed Wiring Harness

3.1 LED indicator definition

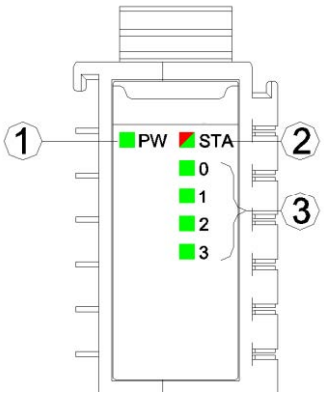

① Power LED indicator (green)

② Module State LED indicator (red/green)

③ Output channel LED indicator (green)

PW POWER STATE (GREEN)	Definition
ON	Internal bus Power Normal
OFF	Internal bus Power Failure
STA MODULE STATE (RED/GREEN)	Definition
Green slow flash (2.5Hz)	Module internal bus is not started
Red slow flash (2.5Hz)	Module internal bus offline
ON (GREEN)	Operation normal
Flash(2.5Hz) (RED/GREEN)	Upgrading mode
Flash(10Hz) (RED/GREEN)	Firmware Update
Double Flash (RED)	Module Exception has been soft-restarted
0-3 Channel Indicator	Definition
ON	The output value is not 0
OFF	The output value is 0

3.2 Terminal definition

Terminal Number	Definition	Description
1	AO0	Signal Output CH0
2	GND	
3	AO1	Signal Output CH1
4	GND	
5	AO2	Signal Output CH2
6	GND	
7	AO3	Signal Output CH3
8	GND	
NC	NC	Not Connected

It is recommended to use cables with cores smaller than 1mm².

The cold-pressed terminal parameters are as follows:

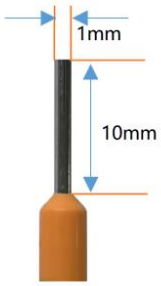

4 Wiring

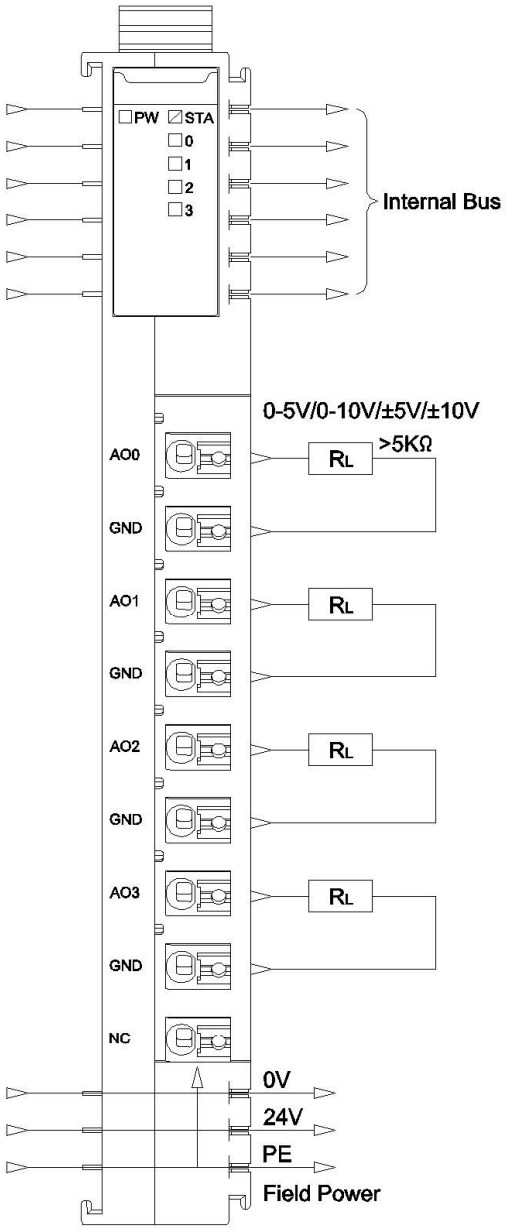
PW
STA
0
1
2
3
Internal Bus
0-5V/0-10V/±5V/±10V
>5KΩ
AO0
GND
AO1
GND
AO2
GND
AO3
GND
NC
RL
RL
RL
RL
0V
24V
PE
Field Power

5 Process data definition

Input Data								
Bit No	Bit 7	Bit 6	Bit 5	Bit 4	Bit 3	Bit 2	Bit 1	Bit 0
Byte 0	Reserved			Over temperature	Overcurrent (CH3)	Overcurrent (CH2)	Overcurren t (CH1)	Overcurr ent (CH0)
Output Data								
Bit No	Bit 7	Bit 6	Bit 5	Bit 4	Bit 3	Bit 2	Bit 1	Bit 0
Byte 0	Analog Output Data (CH 0)							
Byte 1								
Byte 2	Analog Output Data (CH 1)							
Byte 3								
Byte 4	Analog Output Data (CH 2)							
Byte 5								
Byte 6	Analog Output Data (CH 3)							
Byte 7								

5.1 Process data definition（standard mode）

Data description：

Analog Output Data (CH0-3)：voltage output value

Unipolarity 0-5V/0-10V output value

Analog Output Data (NT-4154) **(0-5V/0-10V)**			
Voltage (0-5V)	Voltage (0-10V)	Decimal	Hex
5	10	27648	0x6C00
.	.	.	.
.	.	.	.
2.5	5	13824	0x3600
.	.	.	.
.	.	.	.
0	0	0	0x0000

Bipolar ±5V/±10V Output value

Analog Output Data (NT-4154) (**±5V/±10V**)			
Voltage (±5V)	Voltage (±10V)	Decimal	Hex
5	10	27648	0x6C00
.	.	.	.
.	.	.	.
2.5	5	13824	0x3600
.	.	.	.
.	.	.	.
0	0	0	0x0000
.	.	.	.
.	.	.	.
-2.5	-5	-13824	0xCA00
.	.	.	.
.	.	.	.
-5	-10	-27648	0x9400

5.2 Process data definition（special mode）

Data description：

Analog Output Data (CH0-3)：voltage output value

Unipolarity 0-5V/0-10V output value

Analog Output Data (NT-4154) **(0-5V/0-10V)**			
Voltage (0-5V)	Voltage (0-10V)	Decimal	Hex
5	10	65535	0xFFFF
.	.	.	.
.	.	.	.
2.5	5	32767	0x7FFF
.	.	.	.
.	.	.	.
0	0	0	0x0000

Bipolar ±5V/±10V Output value

Analog Output Data (NT-4154) **(±5V/±10V)**			
Voltage (±5V)	Voltage (±10V)	Decimal	Hex
5	10	32767	0x7FFF
.	.	.	.
.	.	.	.
2.5	5	16383	0x3FFF
.	.	.	.
.	.	.	.
0	0	0	0x0000
.	.	.	.
.	.	.	.
-2.5	-5	-16384	0xC000
.	.	.	.
.	.	.	.
-5	-10	-32768	0x8000

6 Configuration parameters definition

Configuration Parameter								
Bit No	Bit 7	Bit 6	Bit 5	Bit 4	Bit 3	Bit 2	Bit 1	Bit 0
Byte 0	Reserved							16Bit Data Format
Byte 1	Voltage Type (CH 1)				Voltage Type (CH 0)			
Byte 2	Voltage Type (CH 3)				Voltage Type (CH 2)			

Data description:

16Bit Data Format：16 bits data byte transmission sequence (default value: A_B)

A_B：Big-endian format transmission

B_A：Little-endian format transmission

Range_Mode：Process data mode (default: standard mode)

Standard mode: same with Siemens process data definition

Special mode: max range of the hardware

Voltage Type(CH 0-3)：Output voltage type (default value: 0~10Vdc)

Disable：Output disabled

0~5Vdc：0~5V Direct-current output

0~10Vdc：0~10V Direct-current output

-5~5Vdc：-5~5V Direct-current output

-10~10Vdc：-10~10V Direct-current output

A Dimension drawing

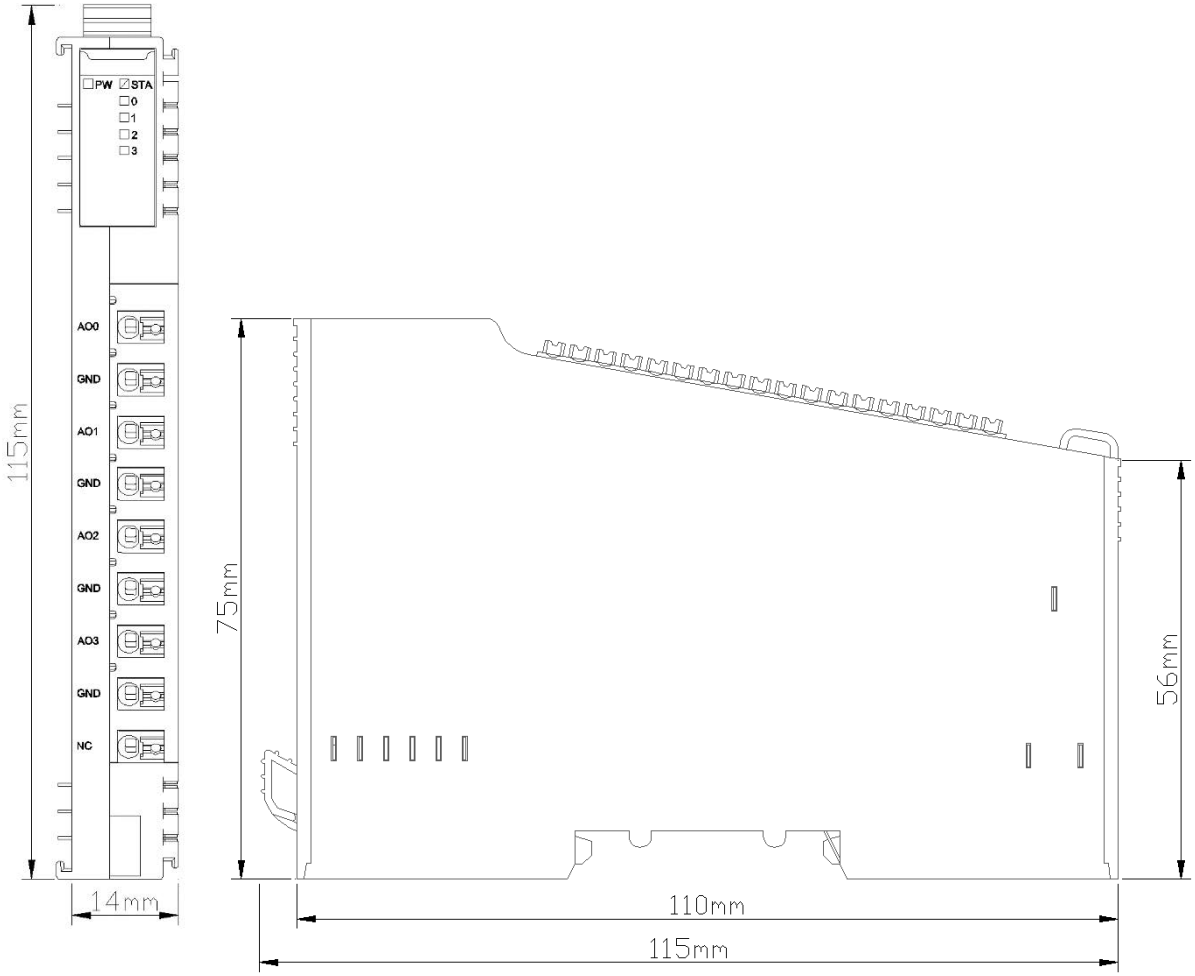

NT-4158 8 channels Voltage Output

0~5VDC/0~10VDC/±5VDC/±10VDC,16bits

1 Module features

- ◆The module supports 8 channels voltage signal output
- ◆ Output range：0~5VDC, 0~10VDC, ±5VDC, ±10VDC， 16 bits
- ◆ The module carries with 8 analog output LED indicators
- ◆ Module output signal is single - ended common - grounded output

2 Technical Parameters

General parameters	
Power	Max.500mA@5.0Vdc
Isolation	I/O to internal bus: magnetic isolation (3KVrms)
Field Power	Not used
Wiring	Max.1.0mm² (AWG 17)
Mounting Type	35mmDIN-Rail
Size	115*14*75mm
Weight	65g
Environment Specification	
Operational Temperature	-40~85℃
Operational Humidity	5%~95% RH (No Condensation)
Ingress Protection Rating	IP20
Output Parameter	
Channel Number	8Channels voltage output
LED Indicator	8 Channels voltage output indicator
Output Voltage Range	0~5VDC、0~10VDC、±5VDC、±10VDC
Load Resistance	Max.5kΩ
Resolution	16 bits
Acquisition Accuracy	±0.1% (Full Scale) @25℃ ±0.3(Full Scale) @-40~85℃
Conversion Time	1 ms / all channels
Diagnose	Overtemperature/overcurrent status monitoring
Protection Current	20mA.
Common Port	Common grounded output

3 Hardware Interface

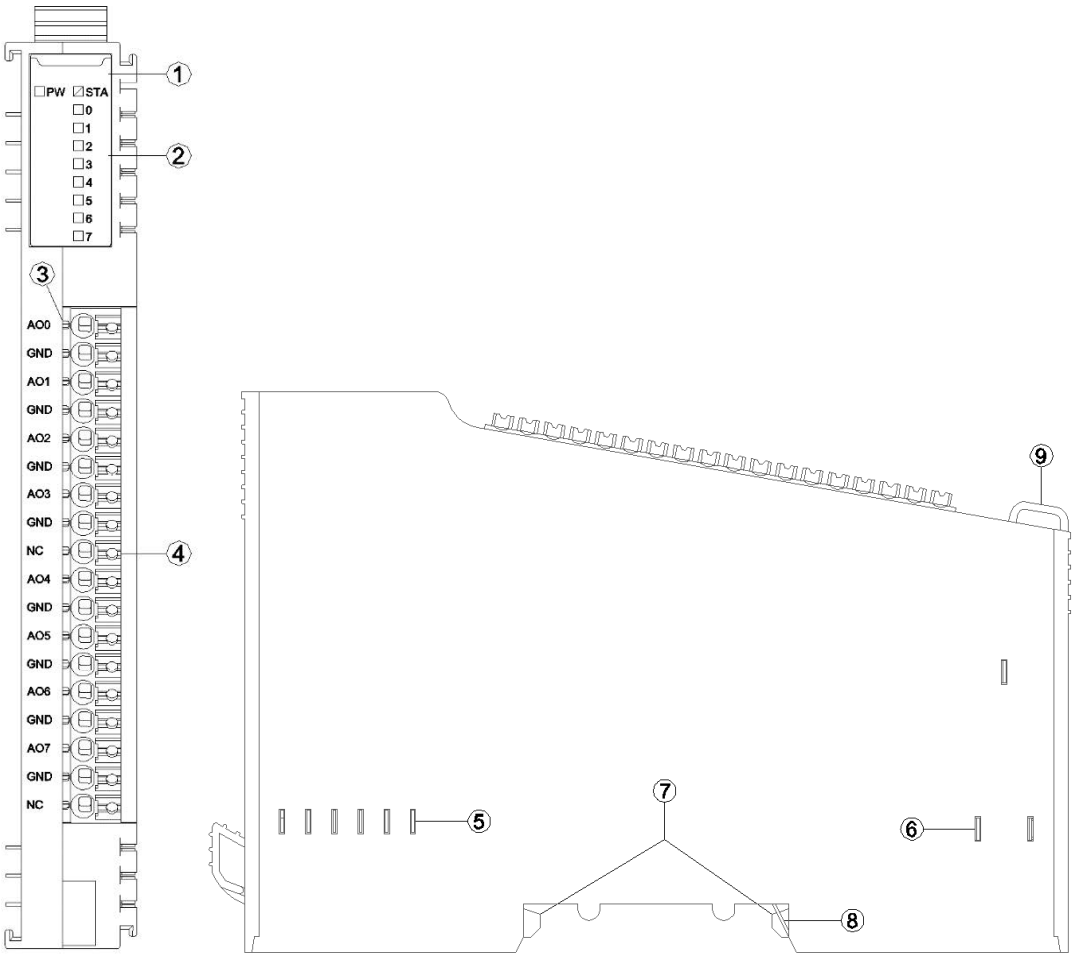

① Module Type

② State indicator

③ N/A

④ Wiring Terminal and identification

⑤ Internal Bus

⑥ Field Power

⑦ Buckle

⑧ Grounding Spring Sheet

⑨ Fixed Wiring Harness

3.1 LED indicator definition

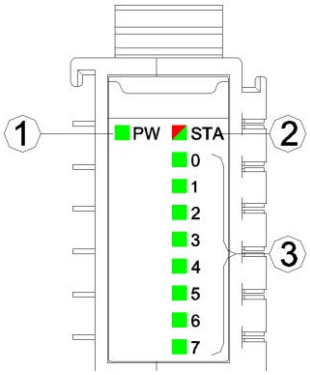

① Power LED indicator (green)

② Module State LED indicator (red/green)

③ Output channel LED indicator (green)

PW POWER STATE (GREEN)	Definition
ON	Internal bus Power Normal
OFF	Internal bus Power Failure
STA MODULE STATE (RED/GREEN)	Definition
Green slow flash (2.5Hz)	Module internal bus is not started
Red slow flash (2.5Hz)	Module internal bus offline
ON (GREEN)	Operation normal
Flash(2.5Hz) (RED/GREEN)	Upgrading mode
Flash(10Hz) (RED/GREEN)	Firmware Update
Double Flash (RED)	Module Exception has been soft-restarted
0-7 Channel Indicator	Definition
ON	The output value is not 0
OFF	The output value is 0

3.2 Terminal definition

Terminal Number	Definition	Description
1	AO0	Signal Output CH0
2	GND	
3	AO1	Signal Output CH1
4	GND	
5	AO2	Signal Output CH2
6	GND	
7	AO3	Signal Output CH3
8	GND	
9	NC	Not Connected
10	AO4	Signal Output CH4
11	GND	
12	AO5	Signal Output CH5
13	GND	
14	AO6	Signal Output CH6
15	GND	
16	AO7	Signal Output CH7
17	GND	
18	NC	Not Connected

It is recommended to use cables with cores smaller than 1mm².

The cold-pressed terminal parameters are as follows:

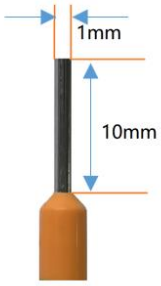

4 Wiring

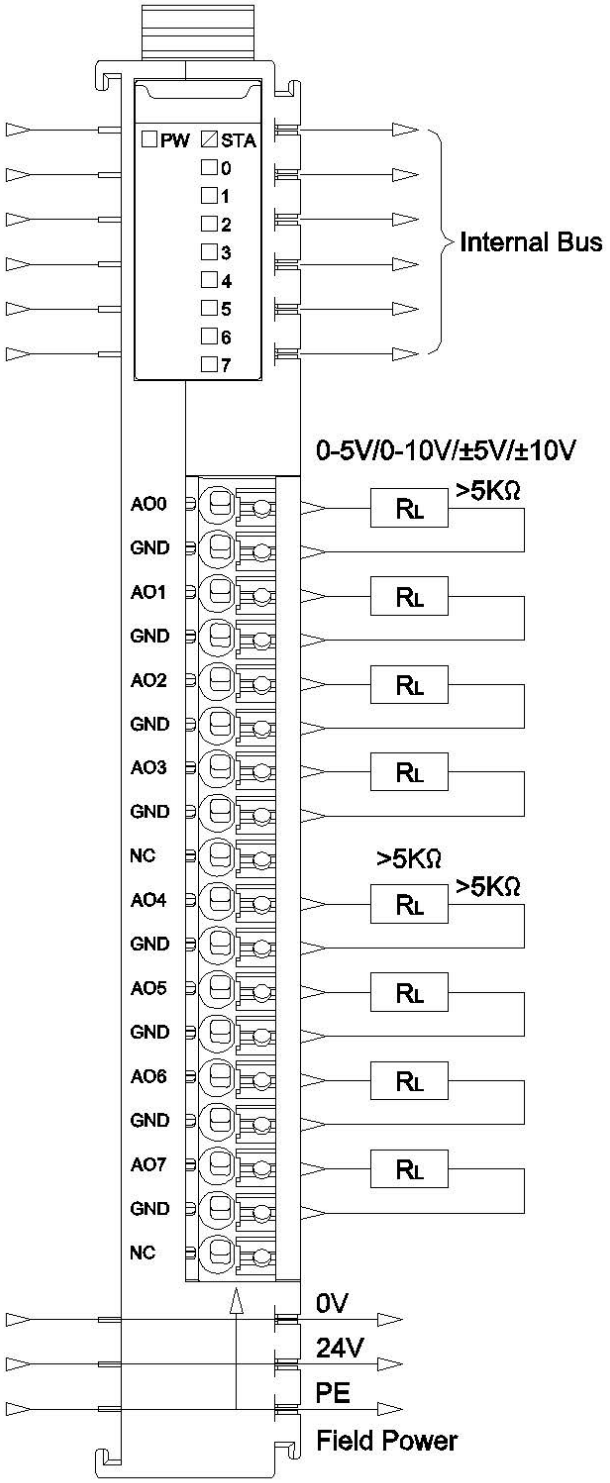
PW
STA
0
1
2
3
4
5
6
7
Internal Bus
0-5V/0-10V/±5V/±10V
AO0
GND
AO1
GND
AO2
GND
AO3
GND
NC
AO4
GND
AO5
GND
AO6
GND
AO7
GND
NC
RL
>5KΩ
0V
24V
PE
Field Power

5 Process data definition

Input Data								
Bit No	Bit 7	Bit 6	Bit 5	Bit 4	Bit 3	Bit 2	Bit 1	Bit 0
Byte 0	Reserved							Overtem perature
Output Data								
Bit No	Bit 7	Bit 6	Bit 5	Bit 4	Bit 3	Bit 2	Bit 1	Bit 0
Byte 0	Analog Output Data (CH 0)							
Byte 1								
Byte 2	Analog Output Data (CH 1)							
Byte 3								
Byte 4	Analog Output Data (CH 2)							
Byte 5								
Byte 6	Analog Output Data (CH 3)							
Byte 7								
Byte 8	Analog Output Data (CH 4)							
Byte 9								
Byte 10	Analog Output Data (CH 5)							
Byte 11								
Byte 12	Analog Output Data (CH 6)							
Byte 13								
Byte 14	Analog Output Data (CH 7)							
Byte 15								

Data description：

Analog Output Data (CH0-7)：voltage output value

Unipolarity 0-5V/0-10V output value

5.1 Process data definition（standard mode）

Data description：

Analog Output Data (CH0-7)：voltage output value

Unipolarity 0-5V/0-10V output value

Analog Output Data (NT-4158) **(0-5V/0-10V)**			
Voltage (0-5V)	Voltage (0-10V)	Decimal	Hex
5	10	27648	0x6C00
.	.	.	.
.	.	.	.
2.5	5	13824	0x3600
.	.	.	.
.	.	.	.
0	0	0	0x0000

Bipolar ±5V/±10V Output value

Analog Output Data (NT-4158) **(±5V/±10V)**			
Voltage (±5V)	Voltage (±10V)	Decimal	Hex
5	10	27648	0x6C00
.	.	.	.
.	.	.	.
2.5	5	13824	0x3600
.	.	.	.
.	.	.	.
0	0	0	0x0000
.	.	.	.
.	.	.	.
-2.5	-5	-13824	0xCA00
.	.	.	.
.	.	.	.
-5	-10	-27648	0x9400

5.2 Process data definition（special mode）

Data description：

Analog Output Data (CH0-7)：voltage output value

Unipolarity 0-5V/0-10V output value

Analog Output Data (NT-4158) **(0-5V/0-10V)**			
Voltage (0-5V)	Voltage (0-10V)	Decimal	Hex
5	10	65535	0xFFFF
.	.	.	.
.	.	.	.
2.5	5	32767	0x7FFF
.	.	.	.
.	.	.	.
0	0	0	0x0000

Bipolar ±5V/±10V Output value

Analog Output Data (NT-4158) **(±5V/±10V)**			
Voltage (±5V)	Voltage (±10V)	Decimal	Hex
5	10	32767	0x7FFF
.	.	.	.
.	.	.	.
2.5	5	16383	0x3FFF
.	.	.	.
.	.	.	.
0	0	0	0x0000
.	.	.	.
.	.	.	.
-2.5	-5	-16384	0xC000
.	.	.	.
.	.	.	.
-5	-10	-32768	0x8000

6 Configuration parameters definition

Configuration Parameter								
Bit No	Bit 7	Bit 6	Bit 5	Bit 4	Bit 3	Bit 2	Bit 1	Bit 0
Byte 0	Reserved							16Bit Data Format
Byte 1	Voltage Type (CH 1)				Voltage Type (CH 0)			
Byte 2	Voltage Type (CH 3)				Voltage Type (CH 2)			
Byte 3	Voltage Type (CH 5)				Voltage Type (CH 4)			
Byte 4	Voltage Type (CH 7)				Voltage Type (CH 6)			

Data description:

16Bit Data Format：16 bits data byte transmission sequence (default value: A_B)

A_B：Big-endian format transmission

B_A：Little-endian format transmission

Range_Mode：Process data mode (default: standard mode)

Standard mode: same with Siemens process data definition

Special mode: max range of the hardware

Voltage Type(CH 0-7)：Output voltage type (default value: 0~10Vdc)

Disable：Output disabled

0~5Vdc：0~5V Direct-current output

0~10Vdc：0~10V Direct-current output

-5~5Vdc：-5~5V Direct-current output

-10~10Vdc：-10~10V Direct-current output

A Dimension drawing

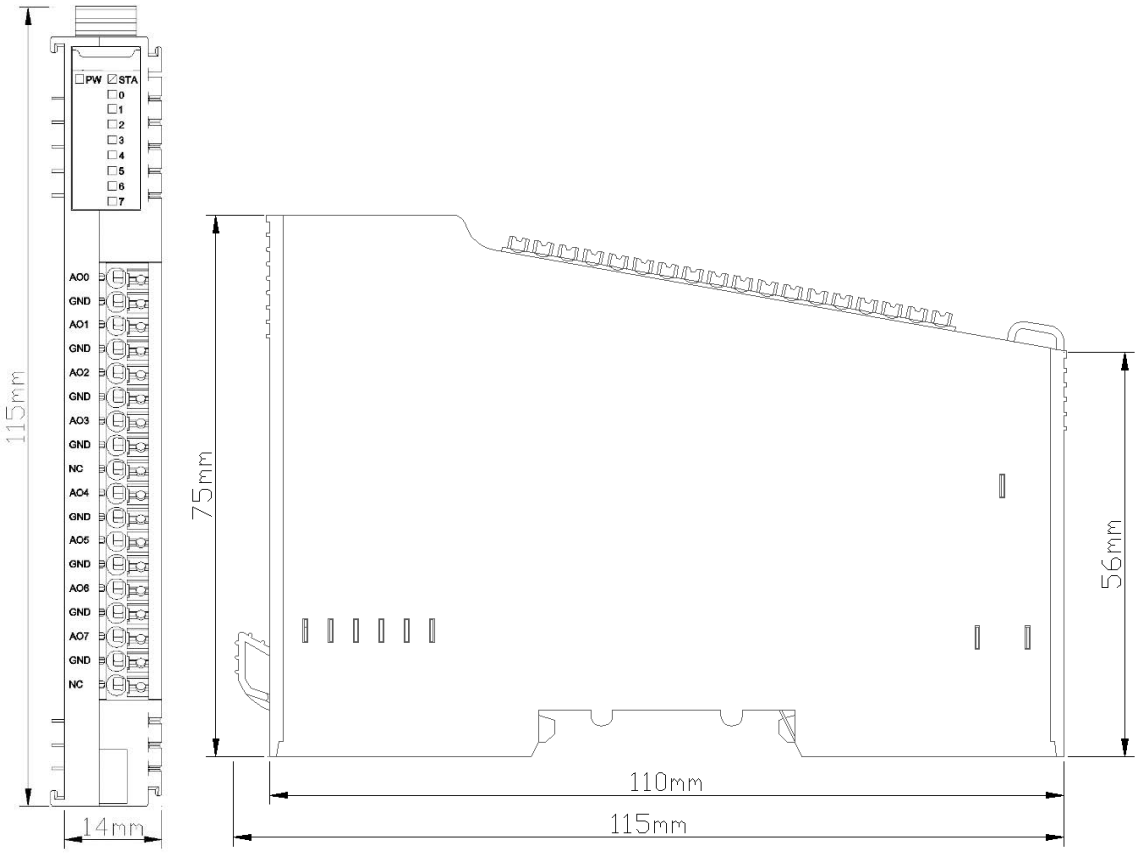

NT-4234: 4 channels analog output /0&4-20mA/16-bit single-terminal

1 Module features

- ◆ 2 output ranges can be set(0-20mA、4-20mA)
- ◆ The module internal bus and field output adopts magnetic insulation
- ◆ Single-terminal grounded together output mode

2 Technical parameters

General parameters	
Power	Max.25mA@5.0Vdc
IO bus isolation	I/O to internal bus: magnetic isolation (2.5KVrms)
Wiring	I/O wiring: Max.1.0mm² (AWG 17)
Installation	35mm DIN-Rail
Size	115*14*75mm
Weight	65g
Environmental parameters	
Working temperature	-40~85℃
Environmental humidity	5%-95% (No Condensation)
Ingress Protection Rating	IP20
Output parameters	
Channel Number	4 channels
Resolution ratio	16Bit
Output range	0-20mA/4-20mA
The output precision	>0.3%
Diagnostic function	Disconnection or overload, field power supply error
The common terminal	0V grounded together, channels are not isolated
Conversion time	2ms/ all channels
Load	Max.1KΩ

3 Hardware interfaces

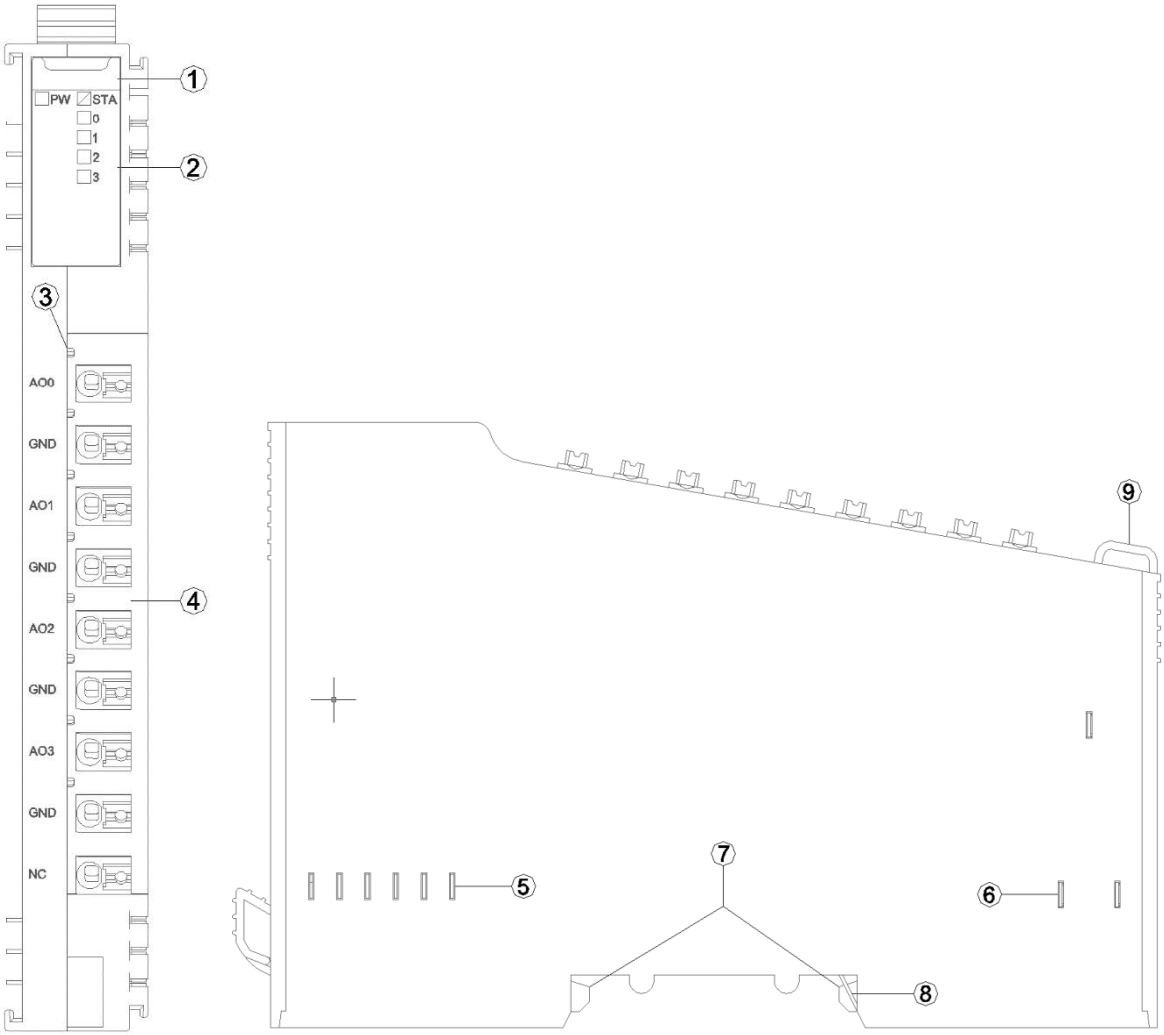

① Module Type

② State Indicator

③ (non field channel indicator)

④ Wiring Terminal and Marking

⑤ Internal Bus

⑥ Field Power

⑦ Buckle

⑧ Grounding Spring Sheet

⑨ Fixed Wiring Harness

3.1 LED indicators definition

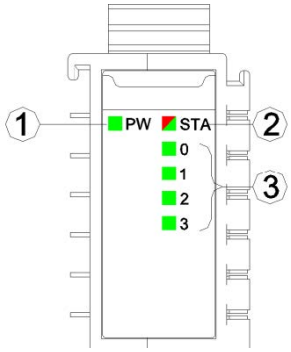

① Power LED indicator (green)

② Module State LED indicator (red/green)

③ Output channel LED indicator (green)

PW Power Indicator(GREEN)	Definition
ON	Internal bus power supply is normal
OFF	Internal bus power supply is failure
STA Module State Indicator (Red/Green)	Definition
Green Slow Flash (2.5hz)	The internal bus of the module is not started
Red Slow Flash (2.5hz)	Module internal bus offline
Green Normally On	Operation is normal
Flash(2.5Hz) (RED/GREEN)	Upgrading mode
Flash(10Hz) (RED/GREEN)	Firmware upgrading
Red Flashes Twice	Module exception has been soft-restarted
0-3 Channel Indicator Light	Definition
ON	Output signal >=1% range
OFF	Output signal <1% range

3.2 Terminal definition

Terminal number	Definition	Instructions
1	AO0	Current output CH0
2	GND	
3	AO1	Current output CH1
4	GND	
5	AO2	Current output CH2
6	GND	
7	AO3	Current output CH3
8	GND	
9	NC	Disconnected

It is recommended to use cables with cores smaller than 1mm².

The cold-pressed terminal parameters are as follows:

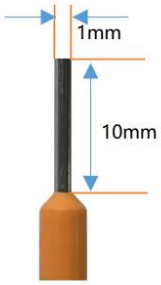

4 Wiring

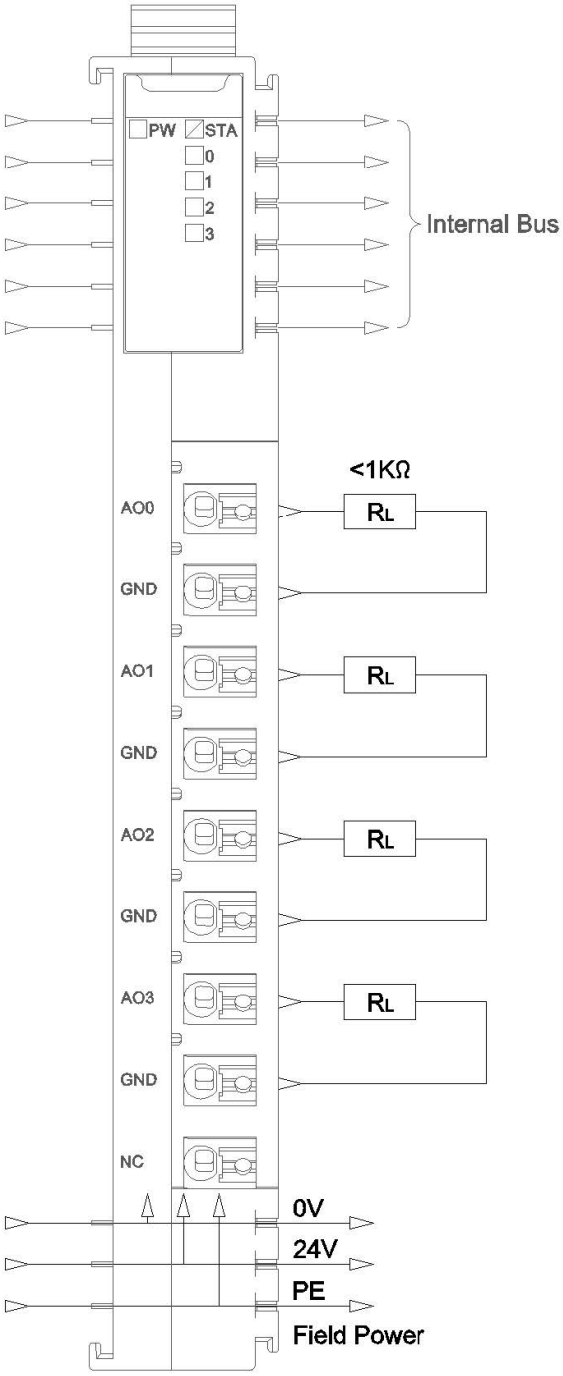
PW
STA
0
1
2
3
Internal Bus
<1KΩ
AO0
GND
AO1
GND
AO2
GND
AO3
GND
NC
RL
RL
RL
RL
0V
24V
PE
Field Power

5 Progress data definition

Input data								
Bit No	Bit 7	Bit 6	Bit 5	Bit 4	Bit 3	Bit 2	Bit 1	Bit 0
Byte 0	Reserved		Field Power Error (CH0-3)	DAC Communication Error (CH0-3)	Output Opening or Overload (CH3)	Output Opening or Overload (CH2)	Output Opening or Overload (CH1)	Output Opening or Overload (CH0)

Output data								
Bit No	Bit 7	Bit 6	Bit 5	Bit 4	Bit 3	Bit 2	Bit 1	Bit 0
Byte 0	Analog Output Data (CH 0)							
Byte 1								
Byte 2	Analog Output Data (CH 1)							
Byte 3								
Byte 4	Analog Output Data (CH 2)							
Byte 5								
Byte 6	Analog Output Data (CH 3)							
Byte 7								

Data description:

Output Opening or Overload (CH0-3): Current output diagnostic State, when the corresponding Output channel is open or overloaded, this bit is set to 1, and it will be automatically cleared when the load returns to normal.

0: normal is load

1: open load or overload

DAC Communication Error(CH0-3): DAC converter Communication is Error. This Error will occur when the field power supply is disconnected or the DAC and isolator are damaged.

0: DAC communication is normal

1: DAC conversion failed

Field Power Error (CH0-3): This Error will occur when the Field Power is not powered on.

0: field power access is normal

1: field power access is failure

Analog Output Data(CH0-3): Analog Output value, 16-bit unsigned integer.

5.1 Process data definition（standard mode）

Analog Output Data(NT-4234) **(0-20mA)**			
Current (0-20mA)	Decimal	Hex	Range
21mA	32767	7FFF	Overflow
	29031	7167	
21mA	29030	7166	Exceeds the upper limit
20mA+723.4nA	27649	6C01	
20mA	27648	6C00	Rated range
15mA	20736	5100	
723.4nA	1	1	
0 mA	0	0	
0 mA	-1	FFFF	Underflow
	-32768	8000	

Analog Output Data(NT-4234) **(4-20mA)**			
Current (4-20mA)	Decimal	Hex	Range
21mA	32767	7FFF	Overflow
	29377	72C1	
21mA	29376	72C0	Exceeds the upper limit
20mA+578.7nA	27649	6C01	
20 mA	27648	6C00	Rated range
16 mA	19008	4A40	
4mA +578.7nA	1	1	
4mA	0	0	
3.9995mA	-1	FFFF	Exceeds the lower limit
3.6mA	-692	FD4C	
3.6mA	-693	FD4B	Underflow
	-32768	8000	

5.Process data definition（special mode）

Analog Output Data (NT-4234)			
Current (0 to 20 mA)	Current (4-20 mA)	Decimal 16 bits	Hexadecimal 16 bits
20	20	65535	0xFFFF
.	.	.	.
.	.	.	.
.	.	.	.
10	12	32767	0x7FFF
.	.	.	.
.	.	.	.
.	.	.	.
0	4	0	0x0000

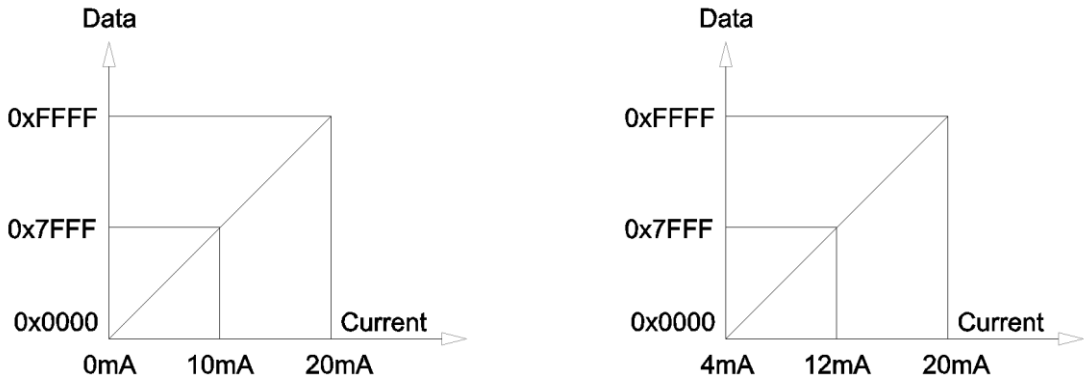

16Bit Data/Current

6 Configuration parameter definition

Configuration parameter								
Bit No	Bit 7	Bit 6	Bit 5	Bit 4	Bit 3	Bit 2	Bit 1	Bit 0
Byte 0	Reserved							16Bit Data Format
Byte 1	Reserved				Current Type CH3	Current Type CH2	Current Type CH1	Current Type CH0

Data description:

16Bit Data Format：Analog data storage format. (Default: 0)

0：A-B

1：B-A

Range_Mode：Process data mode (default: standard mode)

Standard mode: same with Siemens process data definition

Special mode: max range of the hardware

Current Type(CH0-3)：Type of output current. (Default: 1)

0：0-20mA

1：4-20mA

A Dimension drawing

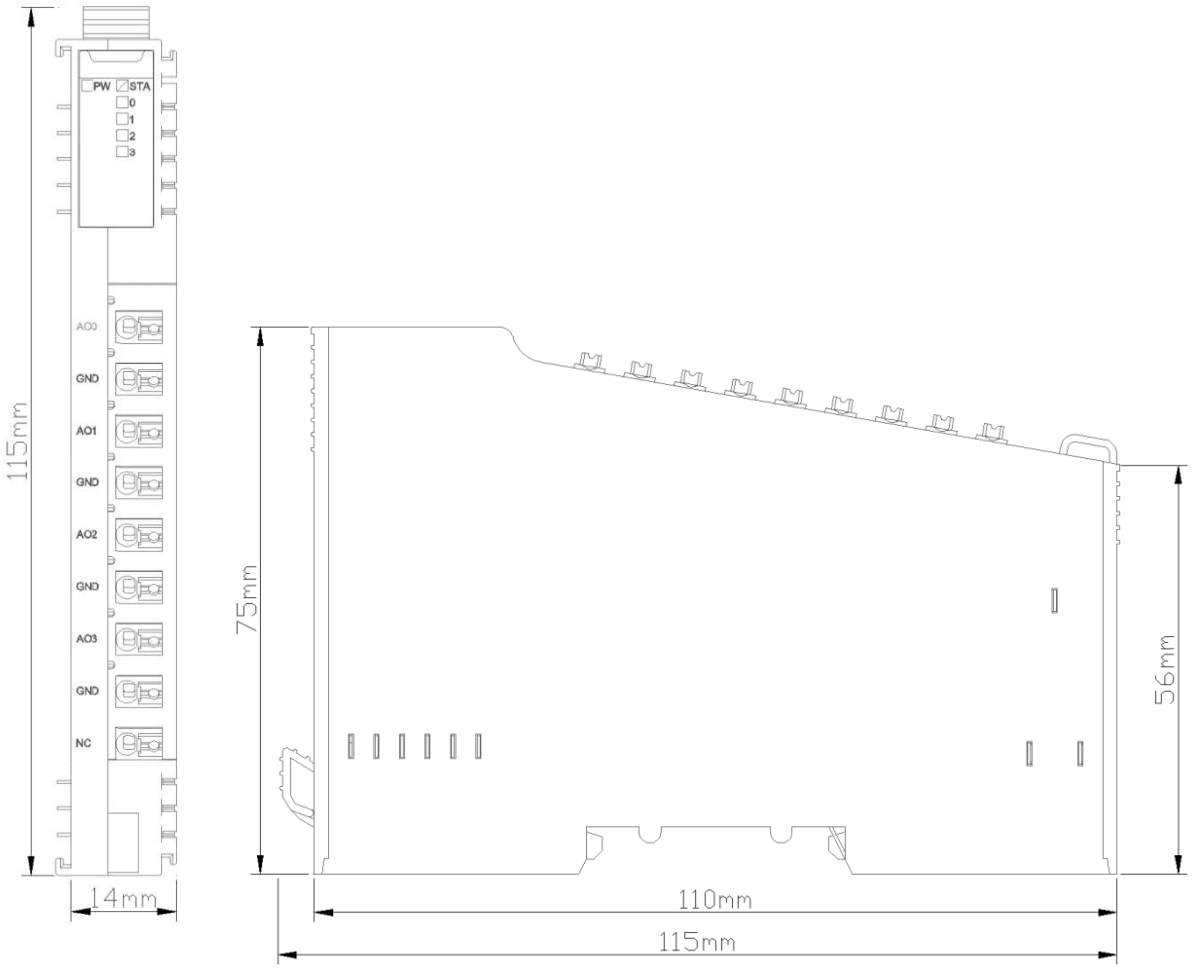

NT-5102 2-channels encoder input /5VDC

1 Module features

◆ the module supports two channels of encoder input.

◆ each encoder channel supports A/B incremental encoder or pulse-directional encoder input.

◆ each encoder channel supports orthogonal A/B signal input, input voltage 5V, and it supports source and sink input.

◆ the incremental encoder mode supports x1/ x2 / x4 frequency multiplication to be selectable.

◆ the pulse - direction mode supports nondirectional signal, pulse input only.

◆ each encoder channel supports 1 digital input signal with an input voltage of 5Vdc or 24Vdc.

◆ each encoder channel supports 1 digital output signal with an output voltage of 5Vdc.

◆ each encoder channel supports 1 way of 5V power output, which can be connected to the encoder for power supply.

◆ the module internal bus and field input adopt magnetic isolation.

◆ the module carries 16 LED indicators.

◆ the maximum input frequency of the encoder supported by the module is 1.5MHz.

◆ the module supports measurement function; it could detect the load speed or input signal frequency.

2 Technical parameters

General Parameters	
Power	Max.60mA@5.0Vdc
Isolation	I/O to internal bus: magnetic isolation (3KVrms)
Field Power	Nominal:24Vdc, Range:20-28Vdc
Wiring	Max.1.0mm² (AWG 17)
Mounting Type	35mm DIN-Rail
Size	115*14*75mm
Weight	65g
Environment Specification	
Operational Temperature	-40~85℃
Operational Humidity	5%-95% (No Condensation)
Ingress Protection Rating	IP20
Input Parameters	
Channel Number	2-channel encoder
LED Indicator	16 channel input LED indicator
Encoder signal voltage range	ABZ input standard 5Vdc, range ±10%
Encoder input impedance	Internal pull-up or pull-down resistance 4.7K
Encoder filtering time	Could be set, the default value is 0.5 us
Encoder count frequency	<1.5MHz
Encoder frequency multiplication mode	x1/x2/x4
Encoder measurement function	Load speed or input signal frequency measurement
DI turn-on voltage	Min.5Vdc to Max.28Vdc
DI turn-off voltage	Max.2.7Vdc
DI turn-on current	Max.5mA/channel@28V
DI input impedance	>10.0kΩ
DI input delay	OFF to ON: Max.3ms ON to OFF: Max.2ms
DO output voltage	5V，range ±10%
DO output current	Max.500mA
DO output sink current	Max.5uA

3 Hardware interfaces

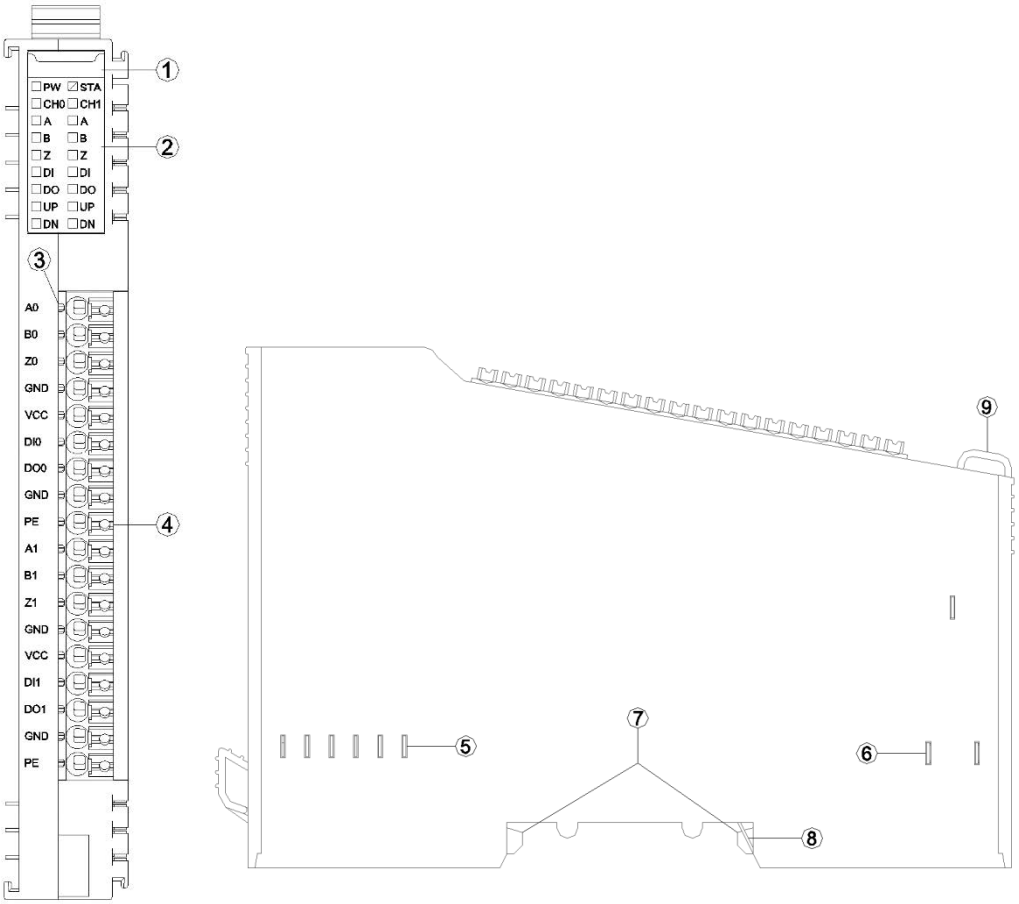

① Module Type

② State indicator

③ Channel indicator

④ Wiring Terminal and identification

⑤ Internal Bus

⑥ Field Power

⑦ Buckle

⑧ Grounding Spring Sheet

⑨ Fixed Wiring Harness

3.1 LED indicator definition

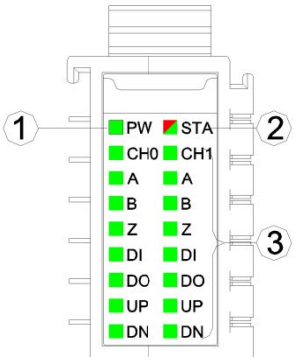

① Power LED indicator (green)

② Module State indicator LED (red/green)

③ Input channel indicator LED (green)

PW Power State	Definition
ON	Internal bus power supply normal
OFF	Internal bus power supply failure
STA Module State	Definition
Green slow flash (2.5 Hz)	Module internal bus is not started
Red slow flash (2.5 Hz)	Module internal bus offline
ON (GREEN)	Operation normal
Flash (2.5 Hz) (RED/GREEN)	updating mode
Flash (10 Hz) (RED/GREEN)	firmware update
Double Flash (RED)	Module exception has been soft-restarted
CH0 CH1 channel indicator LED	Definition
ON	Channel enable
A B Z Encoder signal indicator	Definition
ON	Input signal valid
OFF	Input signal invalid
DI input indicator	Definition
ON	Input signal high level
OFF	Input signal invalid
DO output indicator	Definition
ON	Output signal high level
OFF	Output signal invalid
UP indicator	Definition
ON	Encoder in positive rotation
OFF	Encoder is stationary or in contrarotation
DN indicator	Definition
ON	Encoder in contrarotation
OFF	Encoder is stationary or in positive rotation

3.2 Field channel LED indicator (Green)

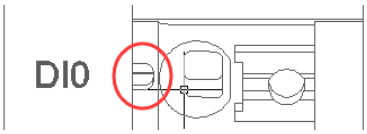

When the input signal of the input channel is valid, the corresponding field channel indicator is on (only the DI/DO/VCC wiring terminal of the encoder channel carries the indicator).

3.3 Terminal definition

Terminal Number	Symbol	Description
1	A0	CH0 encoder phase A input
2	B0	CH0 encoder phase B input
3	Z0	CH0 encoder phase Z input
4	GND	Signal ground
5	VCC	5V power output
6	DI0	CH0 digital signal input
7	DO0	CH0 digital signal output
8	GND	Signal ground
9	PE	Shield earthing
10	A1	CH1 encoder phase A input
11	B1	CH1 encoder phase B input
12	Z1	CH1 encoder phase Z input
13	GND	Signal ground
14	VCC	5V power output
15	DI1	CH1 digital signal input
16	DO1	CH1 digital signal output
17	GND	Signal ground
18	PE	Shield earthing

It is recommended to use cables with cores smaller than 1mm².

The cold-pressed terminal parameters are as follows:

4 Wiring

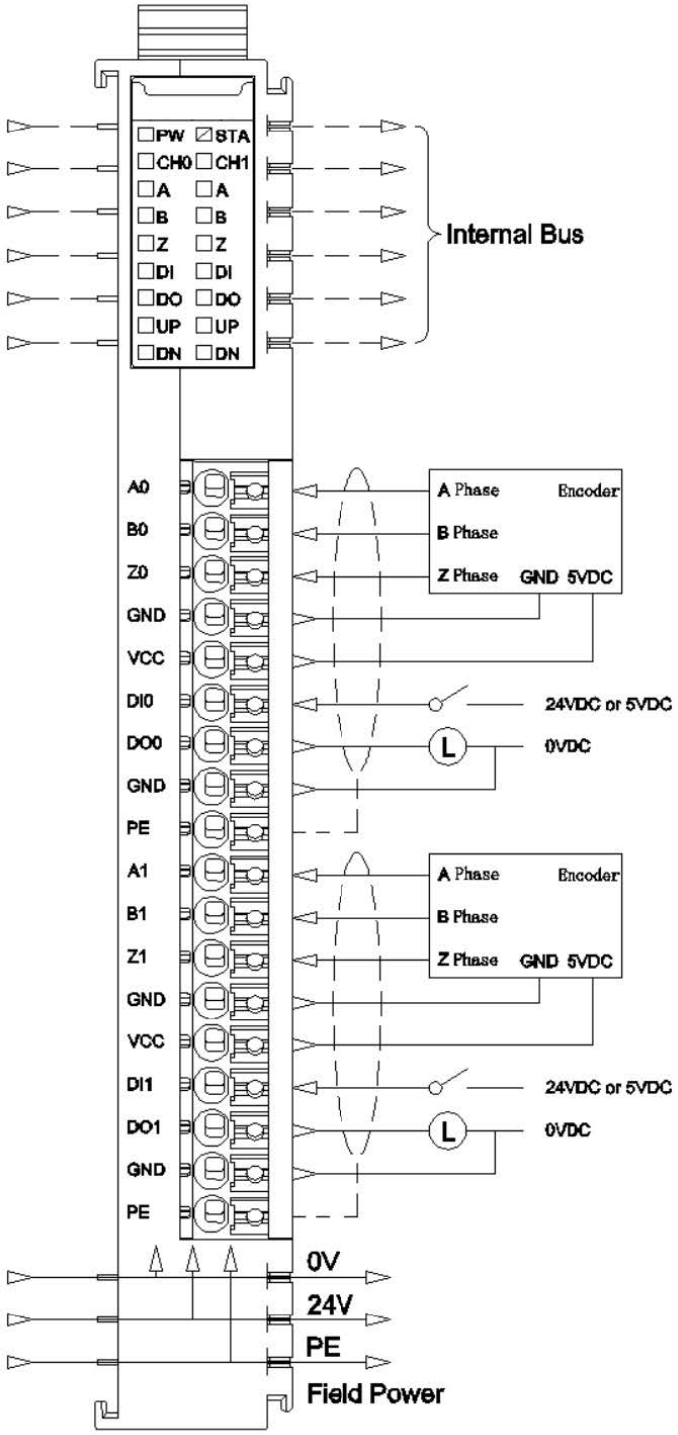
PW
STA
CH0
CH1
A
A
B
B
Z
Z
DI
DI
DO
DO
UP
UP
DN
DN
Internal Bus
A0
B0
Z0
GND
VCC
DI0
DO0
GND
PE
A1
B1
Z1
GND
VCC
DI1
DO1
GND
PE
A Phase
Encoder
B Phase
Z Phase
GND 5VDC
24VDC or 5VDC
0VDC
L
A Phase
Encoder
B Phase
Z Phase
GND 5VDC
24VDC or 5VDC
0VDC
L
0V
24V
PE
Field Power

5 Process data definition

< 2 Analog Input (5V Encoder) > Submodule process data definition

Input Data								
Bit No	Bit 7	Bit 6	Bit 5	Bit 4	Bit 3	Bit 2	Bit 1	Bit 0
Byte 0	Counter DOWN Ch#0	Counter UP Ch#0	Counter Underflow Ch#0	Counter Overflow Ch#0	DI Ch#0	Z Ch#0	B Ch#0	A Ch#0
Byte 1	Reserved							
Byte 2	Counter DOWN Ch#1	Counter UP Ch#1	Counter Underflow Ch#1	Counter Overflow Ch#1	DI Ch#1	Z Ch#1	B Ch#1	A Ch#1
Byte 3	Reserved							
Byte 4	Counter value Ch#0							
Byte 5								
Byte 6								
Byte 7								
Byte 8	Capture value Ch#0							
Byte 9								
Byte 10								
Byte 11								
Byte 12	Measurements 1 Ch#0							
Byte 13								
Byte 14								
Byte 15								
Byte 16	Measurements 2 Ch#0							
Byte 17								
Byte 18								
Byte 19								
Byte 20	Counter value Ch#1							
Byte 21								
Byte 22								
Byte 23								
Byte 24	Capture value Ch#1							
Byte 25								
Byte 26								
Byte 27								
Byte 28	Measurements 1 Ch#1							
Byte 29								
Byte 30								
Byte 31								
Byte 32	Measurements 2 Ch#1							
Byte 33								
Byte 34								
Byte 35								
Output Data								
Bit No	Bit 7	Bit 6	Bit 5	Bit 4	Bit 3	Bit 2	Bit 1	Bit 0

Byte 0	Reserved	Flow Clear Ch#0	Counter Set Trigger Ch#0	DO Ch#0
Byte 1	Reserved			
Byte 2	Reserved	Flow Clear Ch#1	Counter Set Trigger Ch#1	DO Ch#1
Byte 3	Reserved			
Byte 4	Set Value for Counter Ch#0			
Byte 5				
Byte 6				
Byte 7				
Byte 8	Set Value for Counter Ch#1			
Byte 9				
Byte 10				
Byte 11				

Data description：

Input data definition:

A/B/Z Ch#(0-1)： The position is 1 when the corresponding channel A/B/Z input signal is valid, and 0 when the input is invalid.

DI Ch#(0-1)： Digital input signal status.

Counter Overflow Ch#(0-1)： Counter overflowed flag bit.

Counter Underflow Ch#(0-1)： Counter underflows flag bit.

Counter UP： Encoder positive rotation, counter up counting sign.

Counter DOWN： Encoder contrarotation, counter down count flag.

Counter Value Ch#(0-1)： Pulse count value, 32 - bit signed integer, automatically clear after overflow.

Capture value Ch#(0-1)： Pulse capture value, 32-bit signed integer, and when DI is set to capture, the pulse count value will be captured to the capture value at the selected edge.

Measurements 1 Ch#(0-1)： Measurement value 1, the measurement value will be output according to the measurement value type selected by the user (view the configuration parameter section of the module for optional measurement value)

Measurements 2 Ch#(0-1)： Measurement value 2, the measurement value will be

output according to the measurement value type selected by the user (view the configuration parameter section of the module for optional measurement value)

Output data definition:

DO Ch#(0-1)： Digital output channel control.

Counter Set Trigger CH#(0-1)： Counter set trigger bit, rising edge trigger counter set, the output value **Set Value for Counter** will be updated to **Counter Value**, this function can be used to set the initial value of the counter.

Flow Clear CH#(0-1)： Overflow clear bit, the rising edge can clear the input **Counter Overflow** and **Counter Underflow** flag bits.

Set Value for Counter Ch#(0-1)： Counter set value.

6 Configuration parameters definition

<2 Analog Input(5V Encoder)> Submodule configuration parameter definition

Configuration Parameter								
Bit No	Bit 7	Bit 6	Bit 5	Bit 4	Bit 3	Bit 2	Bit 1	Bit 0
Byte 0	Reserved					16Bit Data Format	32Bit Data Format	
Byte 1	Reserved					Work Mode Ch#0		
Byte 2	Reserved						Frequency Multiplication Ch#0	
Byte 3	Reserved			Filtering Time Ch#0				
Byte 4	Reserved							Counter Storage Ch#0
Byte 5	Reserved						Encode Output Signal Type Ch#0	
Byte 6	Reserved							DI Function Selection Ch#0
Byte 7	Reserved						Capture Mode Ch#0	
Byte 8 … Byte 17	Reserved							
Byte 18	Reserved					Speed Measurement Time Ch#0		
Byte 19	Reserved		Measurements 2 Type Ch#0			Measurements 1 Type Ch#0		
Byte 20	Encoder Resolution Ch#0							
Byte 21								
Byte 22	Transmission Ratio Active Ch#0							
Byte 23								
Byte 24	Transmission Ratio Slave Ch#0							
Byte 25								
Byte 26 … Byte 33	Reserved							
Byte 34	Reserved					Work Mode Ch#1		
Byte 35	Reserved						Frequency Multiplication Ch#1	
Byte 36	Reserved			Filtering Time Ch#1				
Byte 37	Reserved							Counter Storage Ch#1
Byte 38	Reserved						Encode Output Signal Type	

<table>
<tr><td></td><td colspan="3"></td><td colspan="2">Ch#1</td></tr>
<tr><td>Byte 39</td><td colspan="4">Reserved</td><td>DI Function Selection Ch#1</td></tr>
<tr><td>Byte 40</td><td colspan="4">Reserved</td><td>Capture Mode Ch#1</td></tr>
<tr><td>Byte 41
…
Byte 50</td><td colspan="5">Reserved</td></tr>
<tr><td>Byte 51</td><td colspan="3">Reserved</td><td colspan="2">Speed Measurement Time Ch#1</td></tr>
<tr><td>Byte 52</td><td>Reserved</td><td colspan="2">Measurements 2 Type Ch#1</td><td colspan="2">Measurements 1 Type Ch#1</td></tr>
<tr><td>Byte 53</td><td colspan="5" rowspan="2">Encoder Resolution Ch#1</td></tr>
<tr><td>Byte 54</td></tr>
<tr><td>Byte 55</td><td colspan="5" rowspan="2">Transmission Ratio Active Ch#1</td></tr>
<tr><td>Byte 56</td></tr>
<tr><td>Byte 57</td><td colspan="5" rowspan="2">Transmission Ratio Slave Ch#1</td></tr>
<tr><td>Byte 58</td></tr>
<tr><td>Byte 59
…
Byte 66</td><td colspan="5">Reserved</td></tr>
</table>

Data description：

16Bit Data Format： Byte transfer order of channel state. (Default: 0)

0：A-B

1：B-A

32Bit Data Format： The byte transfer order of a channel count value. (Default: 0)

0：AB-CD

1：BA-DC

2：CD-AB

3：DC-BA

Work Mode Ch#(0-1)： Working mode of encoder. (Default: 0)

0：Incremental encoder mode.

1：Count direction mode.

2：Count up mode.

3：Count down mode.

Frequency Multiplication Ch#(0-1)： Frequency multiplication number (available only in incremental encoder mode), according to this mode it could output pulse count value.

(Default: 2)

0：frequency multiplication 1

1：frequency multiplication 2

2：frequency multiplication 4

Filtering Time Ch#(0-1)： Encoder input filter time (default: 5)

0：no filter

1：0.1uS

…

5：0.5 uS

…

31：3.1 uS

Counter Storage Ch#(0-1)： Enable storage. When the storage function is enabled, the IO module will save the count value to the non-volatile memory in real time, and load the last saved count value at the next power-on. (Default: 1)

0：Disable

1：Enable

Encoder Output Signal Type Ch#(0-1)：Encoder output type (default: 0)

0：Source

1：Sink

2：Push–pull

DI Function Selection Ch#(0-1)： DI function selection (Default: 0)

0：Normal DI function

1：Pulse capture function

Capture Mode Ch#(0-1)： Capture mode (default: 0)

0：Rising edge capture

1：Falling edge capture

2：Double edge capture

Speed Measurement Time Ch#(0-1)：Speed measurement period (Default: 6)

0：10mS

1：20mS

2：50mS

3：100mS

4：200mS

5：500mS

6：1000mS

7：2000mS

Measurements 1 Type Ch#(0-1)：Measurement value 1 Type selection (default: 0)

0：No measurements

1：Measuring speed (min/rotation)

2：Measuring frequency

Measurements 2 Type Ch#(0-1)：Measurement value 2 Type selection (default: 0)

0：No measurements

1：Measuring speed (min/ rotation)

2：Measuring frequency

Encoder Resolution Ch#(0-1)：Encoder resolution (default: 1)

Value range：1-65535

Transmission Ratio Active Ch#(0-1)：1）Transmission ratio (main) (Default: 1)

Value range：1-65535

Transmission Ratio Slave Ch#(0-1)：Transmission ratio (main) (Default: 1)

Value range：1-65535

A Dimension drawing

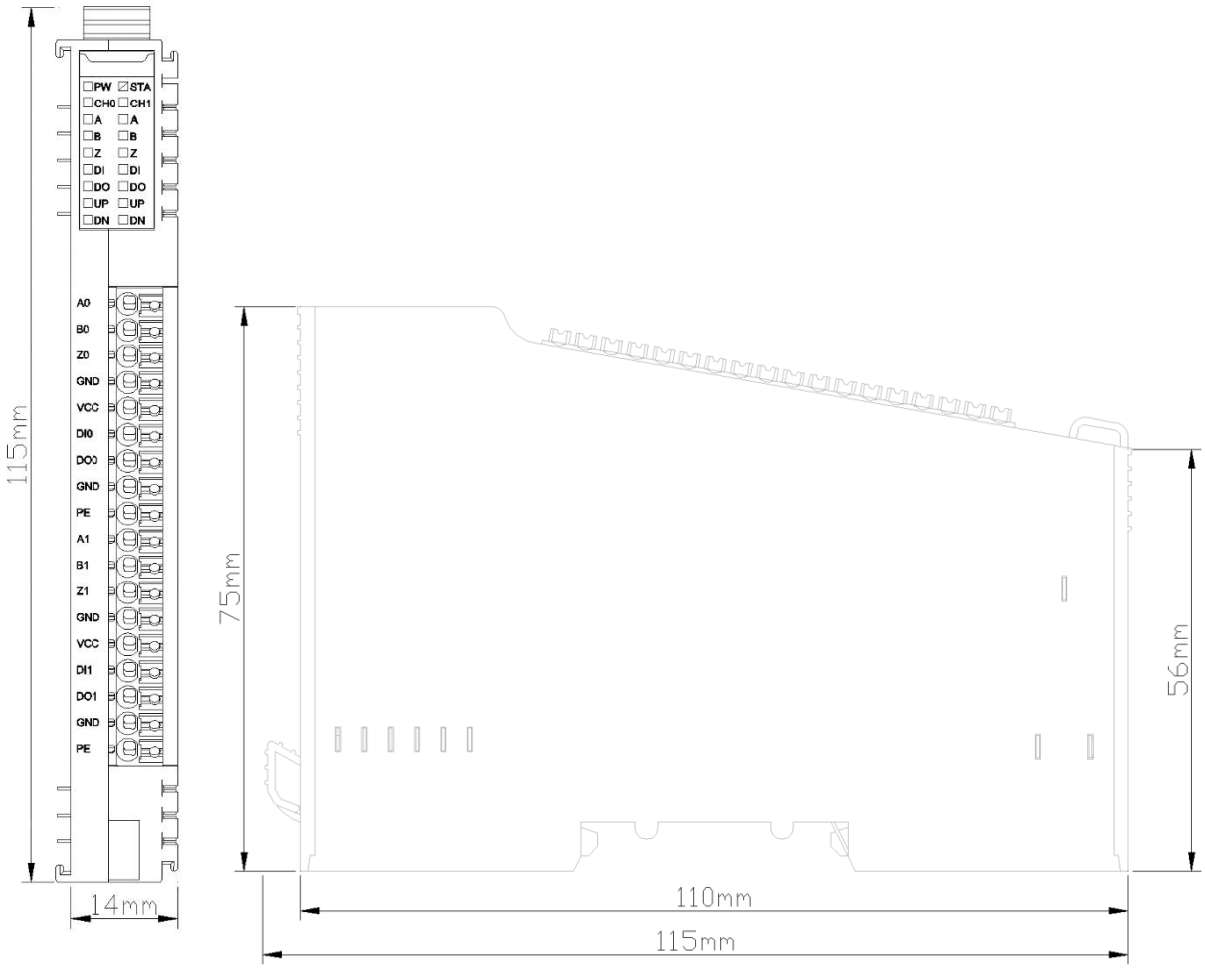

NT-5112 2-channels encoder input/24VDC

1 Module features

◆ the module supports two channels of encoder input.

◆ each encoder channel supports A/B incremental encoder or pulse-directional encoder input.

◆ each encoder channel supports orthogonal A/B signal input, input voltage 24V, and it supports source and sink input.

◆ the incremental encoder mode supports x1/ x2 / x4 frequency multiplication mode.

◆ the pulse - direction mode supports nondirectional signal, pulse input only.

◆ each encoder channel supports 1 digital input signal with an input voltage of 5Vdc or 24Vdc.

◆ each encoder channel supports 1 digital output signal with an output voltage of 24Vdc.

◆ each encoder channel supports 1 way of 24V power output, which can be connected to the encoder for power supply.

◆ the module internal bus and field input adopt magnetic isolation.

◆ the module carries 16 LED indicators.

◆ the maximum input frequency of the encoder supported by the module is 0.5MHz.

◆ the module supports measurement function; it could detect the load speed or input signal frequency.

2 Technical parameters

General Parameters	
Power	Max.65mA@5.0Vdc
Isolation	I/O to internal bus: magnetic isolation (3KVrms)
Field Power	Nominal:24Vdc, Range:20-28Vdc
Wiring	Max.1.0mm² (AWG 17)
Mounting Type	35mm DIN-Rail
Size	115*14*75mm
Weight	65g
Environment Specification	
Operational Temperature	-40~85°C
Operational Humidity	5%-95% (No Condensation)
Ingress Protection Rating	IP20
Input Parameters	
Channel Number	2-channel encoder
LED Indicator	16 channel input LED indicator
Encoder ABZ signal range	Logical "0": 0 - 6Vdc Logical "1": 22 - 28Vdc
Encoder input impedance	Internal pull-up or pull-down resistance 4.7K
Encoder filtering time	Could be set, the default value is 0.5 us
Encoder count frequency	<0.5MHz
Encoder frequency multiplication mode	x1/x2/x4
Encoder measurement function	Load speed or input signal frequency measurement
DI turn-on voltage	Min.5Vdc to Max.28Vdc
DI turn-off voltage	Max.2.7Vdc
DI turn-on current	Max.5mA/channel@28V
DI input impedance	>10.0kΩ
DI input delay	OFF to ON: Max.3ms ON to OFF: Max.2ms
DO output voltage	24V，range ±10%
DO output current	Max.500mA
DO output sink current	Max.5uA

3 Hardware interfaces

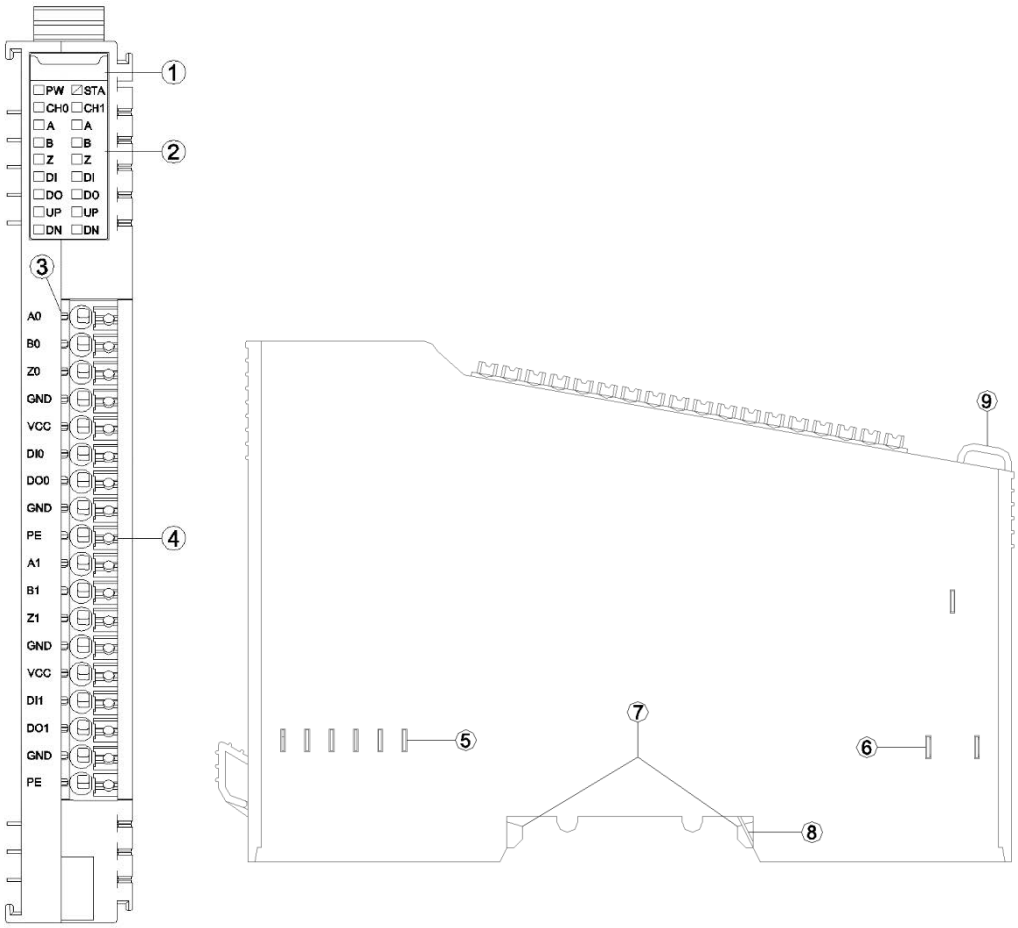

① Module Type

② State indicator

③ Channel indicator

④ Wiring Terminal and identification

⑤ Internal Bus

⑥ Field Power

⑦ Buckle

⑧ Grounding Spring Sheet

⑨ Fixed Wiring Harness

3.1 LED indicator definition

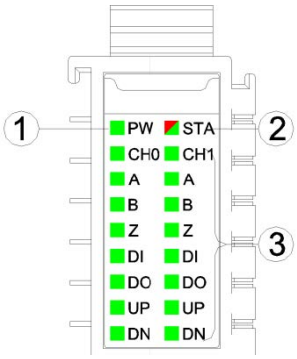

① Power LED indicator (green)

② Module State indicator LED (red/green)

③ Input channel indicator LED (green)

PW Power State	Definition
ON	Internal bus power supply normal
OFF	Internal bus power supply failure
STA Module State	Definition
Green slow flash (2.5 Hz)	Module internal bus is not started
Red slow flash (2.5 Hz)	Module internal bus offline
ON (GREEN)	Operation normal
Flash (2.5 Hz) (RED/GREEN)	updating mode
Flash (10 Hz) (RED/GREEN)	firmware update
Double Flash (RED)	Module exception has been soft-restarted
CH0 CH1 channel indicator LED	Definition
ON	Channel enable
A B Z Encoder signal indicator	Definition
ON	Input signal valid
OFF	Input signal invalid
DI input indicator	Definition
ON	Input signal high level
OFF	Input signal invalid
DO output indicator	Definition
ON	Output signal high level
OFF	Output signal invalid
UP indicator	Definition
ON	Encoder in positive rotation
OFF	Encoder is stationary or in contrarotation
DN indicator	Definition
ON	Encoder in contrarotation
OFF	Encoder is stationary or in positive rotation

3.2 Field channel LED indicator (Green)

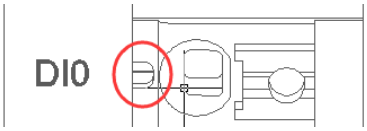

When the input signal of the input channel is valid, the corresponding field channel indicator is on (only the DI/DO/VCC wiring terminal of the encoder channel carries the indicator).

3.3 Terminal definition

Terminal Number	Symbol	Description
1	A0	CH0 encoder phase A input
2	B0	CH0 encoder phase B input
3	Z0	CH0 encoder phase Z input
4	GND	Signal ground
5	VCC	24V power output
6	DI0	CH0 digital signal input
7	DO0	CH0 digital signal output
8	GND	Signal ground
9	PE	Shield earthing
10	A1	CH1 encoder phase A input
11	B1	CH1 encoder phase B input
12	Z1	CH1 encoder phase Z input
13	GND	Signal ground
14	VCC	24V power output
15	DI1	CH1 digital signal input
16	DO1	CH1 digital signal output
17	GND	Signal ground
18	PE	Shield earthing

It is recommended to use cables with cores smaller than 1mm².

The cold-pressed terminal parameters are as follows:

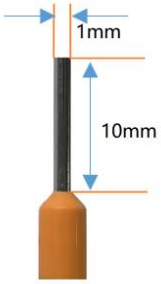

4 Wiring

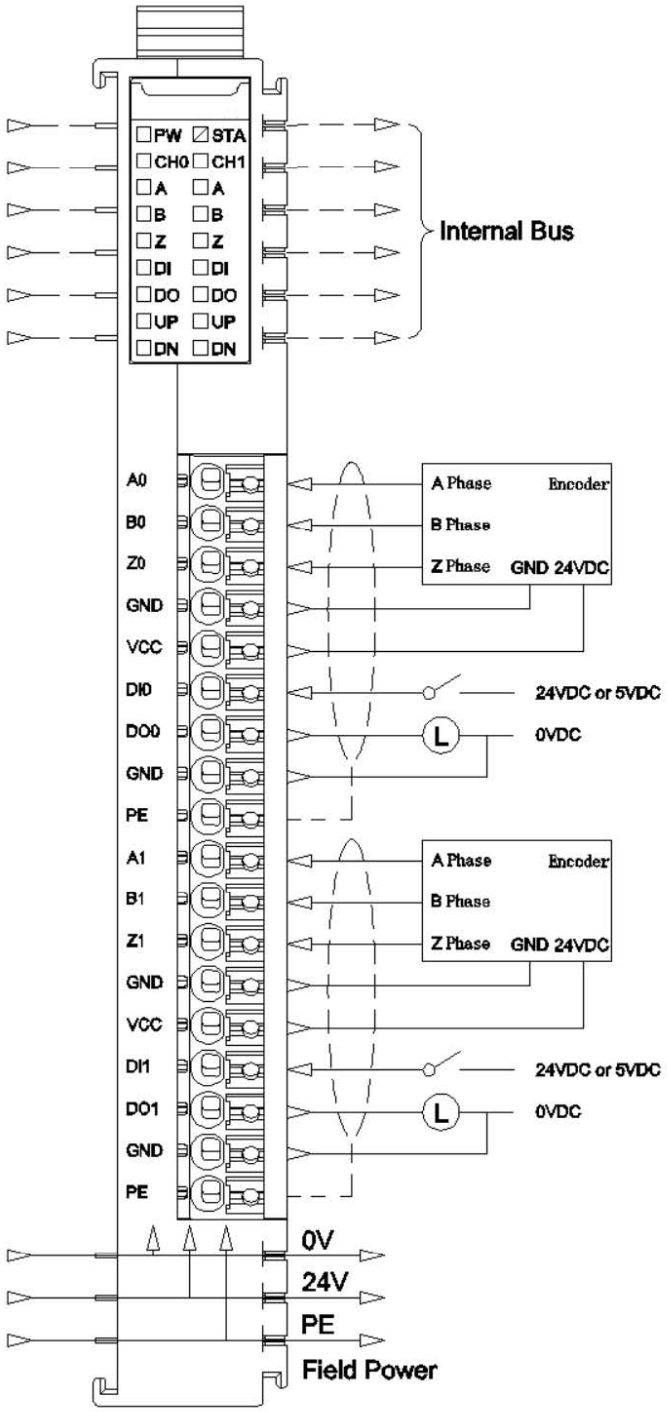
PW
STA
CH0
CH1
A
A
B
B
Z
Z
DI
DI
DO
DO
UP
UP
DN
DN
Internal Bus
A0
B0
Z0
GND
VCC
DI0
DO0
GND
PE
A1
B1
Z1
GND
VCC
DI1
DO1
GND
PE
A Phase
Encoder
B Phase
Z Phase
GND 24VDC
24VDC or 5VDC
0VDC
L
A Phase
Encoder
B Phase
Z Phase
GND 24VDC
24VDC or 5VDC
0VDC
L
0V
24V
PE
Field Power

5 Process data definition

< 2 Analog Input(24V Encoder) > Submodule process data definition

Input Data								
Bit No	Bit 7	Bit 6	Bit 5	Bit 4	Bit 3	Bit 2	Bit 1	Bit 0
Byte 0	Counter DOWN Ch#0	Counter UP Ch#0	Counter Underflow Ch#0	Counter Overflow Ch#0	DI Ch#0	Z Ch#0	B Ch#0	A Ch#0
Byte 1	Reserved							
Byte 2	Counter DOWN Ch#1	Counter UP Ch#1	Counter Underflow Ch#1	Counter Overflow Ch#1	DI Ch#1	Z Ch#1	B Ch#1	A Ch#1
Byte 3	Reserved							
Byte 4	Counter value Ch#0							
Byte 5								
Byte 6								
Byte 7								
Byte 8	Capture value Ch#0							
Byte 9								
Byte 10								
Byte 11								
Byte 12	Measurements 1 Ch#0							
Byte 13								
Byte 14								
Byte 15								
Byte 16	Measurements 2 Ch#0							
Byte 17								
Byte 18								
Byte 19								
Byte 20	Counter value Ch#1							
Byte 21								
Byte 22								
Byte 23								
Byte 24	Capture value Ch#1							
Byte 25								
Byte 26								
Byte 27								
Byte 28	Measurements 1 Ch#1							
Byte 29								
Byte 30								
Byte 31								
Byte 32	Measurements 2 Ch#1							
Byte 33								
Byte 34								
Byte 35								
Output Data								
Bit No	Bit 7	Bit 6	Bit 5	Bit 4	Bit 3	Bit 2	Bit 1	Bit 0

Byte 0	Reserved	Flow Clear Ch#0	Counter Set Trigger Ch#0	DO Ch#0
Byte 1	Reserved			
Byte 2	Reserved	Flow Clear Ch#1	Counter Set Trigger Ch#1	DO Ch#1
Byte 3	Reserved			
Byte 4	Set Value for Counter Ch#0			
Byte 5				
Byte 6				
Byte 7				
Byte 8	Set Value for Counter Ch#1			
Byte 9				
Byte 10				
Byte 11				

Data description：

Input data definition:

A/B/Z Ch#(0-1)： The position is 1 when the corresponding channel A/B/Z input signal is valid, and 0 when the input is invalid.

DI Ch#(0-1)： Digital input signal status.

Counter Overflow Ch#(0-1)： Counter overflowed flag bit.

Counter Underflow Ch#(0-1)： Counter underflows flag bit.

Counter UP： Encoder positive rotation, counter up counting sign.

Counter DOWN： Encoder contrarotation, counter down count flag.

Counter Value Ch#(0-1)： Pulse count value, 32 - bit signed integer, automatically clear after overflow.

Capture value Ch#(0-1)： Pulse capture value, 32-bit signed integer, and when DI is set to capture, the pulse count value will be captured to the capture value at the selected edge.

Measurements 1 Ch#(0-1)： Measurement value 1, the measurement value will be output according to the measurement value type selected by the user (view the configuration parameter section of the module for optional measurement value)

Measurements 2 Ch#(0-1)： Measurement value 2, the measurement value will be

output according to the measurement value type selected by the user (view the configuration parameter section of the module for optional measurement value)

Output data definition:

DO Ch#(0-1)： Digital output channel control.

Counter Set Trigger CH#(0-1)： Counter set trigger bit, rising edge trigger counter set, the output value **Set Value for Counter** will be updated to **Counter Value**, this function can be used to set the initial value of the counter.

Flow Clear CH#(0-1)： Overflow clear bit, the rising edge can clear the input **Counter Overflow** and **Counter Underflow** flag bits.

Set Value for Counter Ch#(0-1)： Counter set value.

6 Configuration parameters definition

<2 Analog Input (24V Encoder)> Submodule configuration parameter definition

Configuration Parameter								
Bit No	Bit 7	Bit 6	Bit 5	Bit 4	Bit 3	Bit 2	Bit 1	Bit 0
Byte 0	Reserved					16Bit Data Format	32Bit Data Format	
Byte 1	Reserved					Work Mode Ch#0		
Byte 2	Reserved						Frequency Multiplication Ch#0	
Byte 3	Reserved			Filtering Time Ch#0				
Byte 4	Reserved							Counter Storage Ch#0
Byte 5	Reserved						Encode Output Signal Type Ch#0	
Byte 6	Reserved							DI Function Selection Ch#0
Byte 7	Reserved						Capture Mode Ch#0	
Byte 8 … Byte 17	Reserved							
Byte 18	Reserved					Speed Measurement Time Ch#0		
Byte 19	Reserved		Measurements 2 Type Ch#0			Measurements 1 Type Ch#0		
Byte 20	Encoder Resolution Ch#0							
Byte 21								
Byte 22	Transmission Ratio Active Ch#0							
Byte 23								
Byte 24	Transmission Ratio Slave Ch#0							
Byte 25								
Byte 26 … Byte 33	Reserved							
Byte 34	Reserved					Work Mode Ch#1		
Byte 35	Reserved						Frequency Multiplication Ch#1	

Byte 36	Reserved	Filtering Time Ch#1		
Byte 37	Reserved			Counter Storage Ch#1
Byte 38	Reserved		Encode Output Signal Type Ch#1	
Byte 39	Reserved			DI Function Selection Ch#1
Byte 40	Reserved		Capture Mode Ch#1	
Byte 41 … Byte 50	Reserved			
Byte 51	Reserved		Speed Measurement Time Ch#1	
Byte 52	Reserved	Measurements 2 Type Ch#1	Measurements 1 Type Ch#1	
Byte 53	Encoder Resolution Ch#1			
Byte 54				
Byte 55	Transmission Ratio Active Ch#1			
Byte 56				
Byte 57	Transmission Ratio Slave Ch#1			
Byte 58				
Byte 59 … Byte 66	Reserved			

Data description：

16Bit Data Format： Byte transfer order of channel state. (Default: 0)

0：A-B

1：B-A

32Bit Data Format： The byte transfer order of a channel count value. (Default: 0)

0：AB-CD

1：BA-DC

2：CD-AB

3：DC-BA

Work Mode Ch#(0-1)： Working mode of encoder. (Default: 0)

0：Incremental encoder mode.

1：Count direction mode.

2：Count up mode.

3：Count down mode.

Frequency Multiplication Ch#(0-1)：Frequency multiplication number (available only in incremental encoder mode), according to this mode it could output pulse count value. (Default: 2)

0：frequency multiplication 1

1：frequency multiplication 2

2：frequency multiplication 4

Filtering Time Ch#(0-1)： Encoder input filter time (default: 5)

0：no filter

1：0.1uS

…

5：0.5 uS

…

31：3.1 uS

Counter Storage Ch#(0-1)： Enable storage. When the storage function is enabled, the IO module will save the count value to the non-volatile memory in real time, and load the last saved count value at the next power-on. (Default: 1)

0：Disable

1：Enable

Encoder Output Signal Type Ch#(0-1)：Encoder output type (default: 0)

0：Source

1：Sink

2：Push–pull

DI Function Selection Ch#(0-1)： DI function selection (Default: 0)

0：Normal DI function

1：Pulse capture function

Capture Mode Ch#(0-1)：Capture mode (default: 0)

0：Rising edge capture

1：Falling edge capture

2：Double edge capture

Speed Measurement Time Ch#(0-1)：Speed measurement period (Default: 6)

0：10mS

1：20mS

2：50mS

3：100mS

4：200mS

5：500mS

6：1000mS

7：2000mS

Measurements 1 Type Ch#(0-1)：Measurement value 1 Type selection (default: 0)

0：No measurements

1：Measuring speed (min/rotation)

2：Measuring frequency

Measurements 2 Type Ch#(0-1)：Measurement value 2 Type selection (default: 0)

0：No measurements

1：Measuring speed (min/ rotation)

2：Measuring frequency

Encoder Resolution Ch#(0-1)：Encoder resolution (default: 1)

Value range：1-65535

Transmission Ratio Active Ch#(0-1)：1）Transmission ratio (main) (Default: 1)

Value range：1-65535

Transmission Ratio Slave Ch#(0-1)：Transmission ratio (main) (Default: 1)

Value range：1-65535

A Dimension drawing

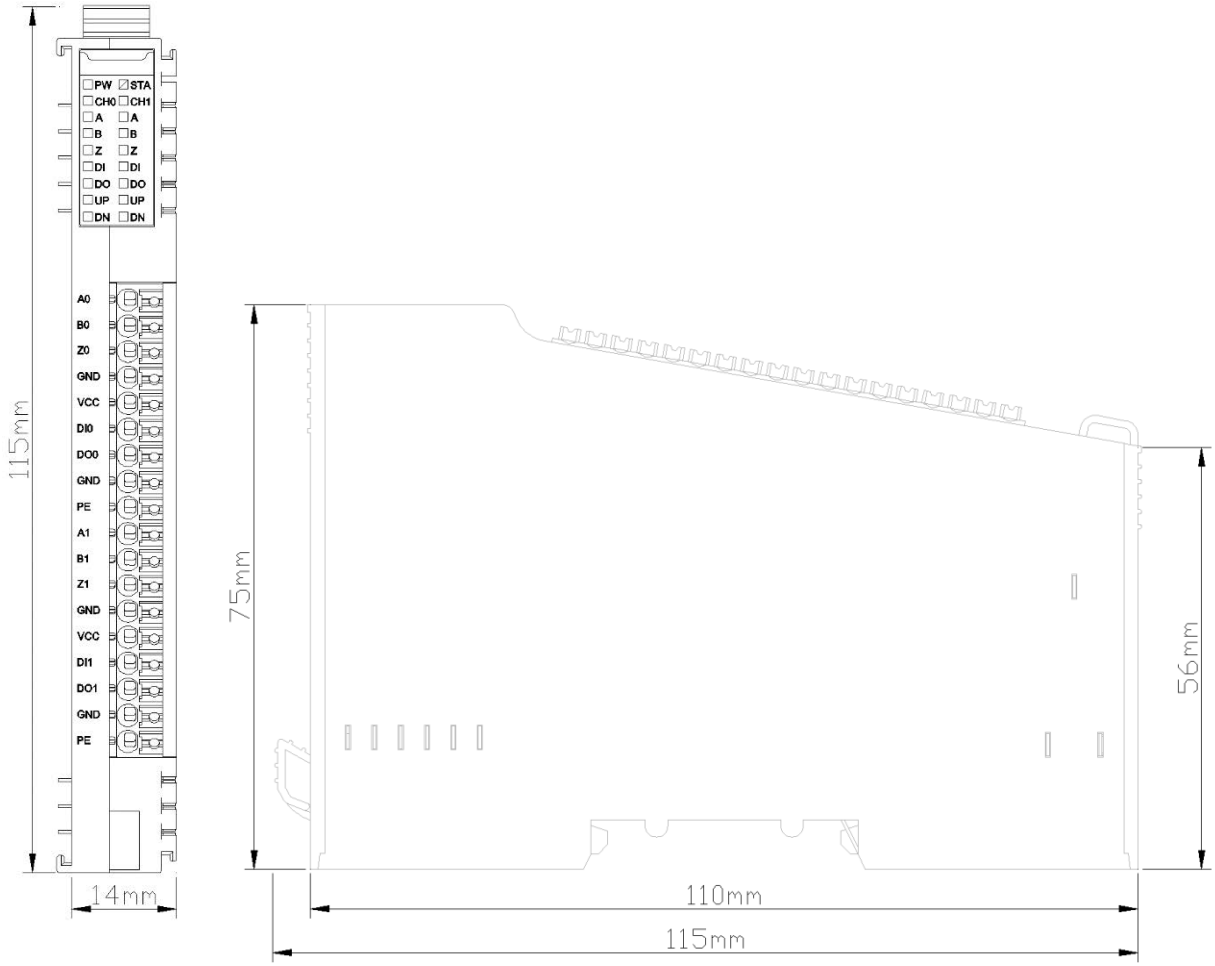

7 NT-5112 Submodule configuration parameter description

7.1 D/O Function Selection

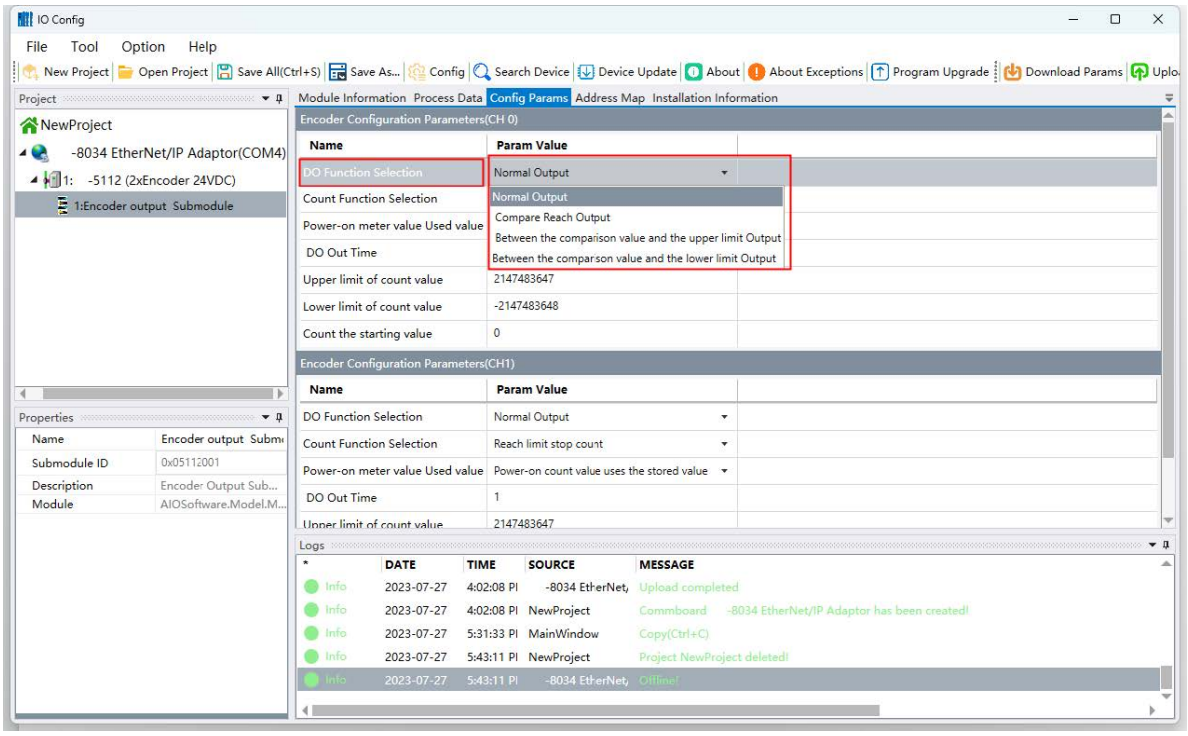

Normal Output

"Normal Output" is "NT-5112 Encoder output Submodule" configuration parameter, and "DO Function Selection" option is selected as default parameter. When the DO Function Selection option is this parameter, DO is still controlled by NT-5112 process data comparison control bit.

Compare value output reached

When the "Encoder output Submodule" configuration parameter "DO Function Selection" option parameter is set to this parameter, after the "Compare Value" is correctly set and enabled through the submodule process data, when the NT-5112 Counter Value reaches the Compare Value, DO will be output, and the output time is maintained for 1ms (default).

Output between the comparison value and the upper limit

When the "Encoder output Submodule" configuration parameter "DO Function

Selection” option parameter is set to this parameter, after the “Compare Value” is correctly set and enabled comparison control bit through the submodule process data, when the NT-5112 “Counter Value” is within the range of Compare Value and Upper limit of count value, DO will Output, and it will output until NT-5112 Counter Value is out of range.

Output between the comparison value and the lower limit

When the “Encoder output Submodule” configuration parameter “DO Function Selection” option parameter is set to this parameter, after the “Compare Value” is correctly set and enabled comparison control bit through the submodule process data, when the NT-5112 Counter Value is within the range of Compare Value and Lower limit of count value, DO will Output, and it will output until NT-5112 Counter Value is out of range.

7.2 Count Function Selection

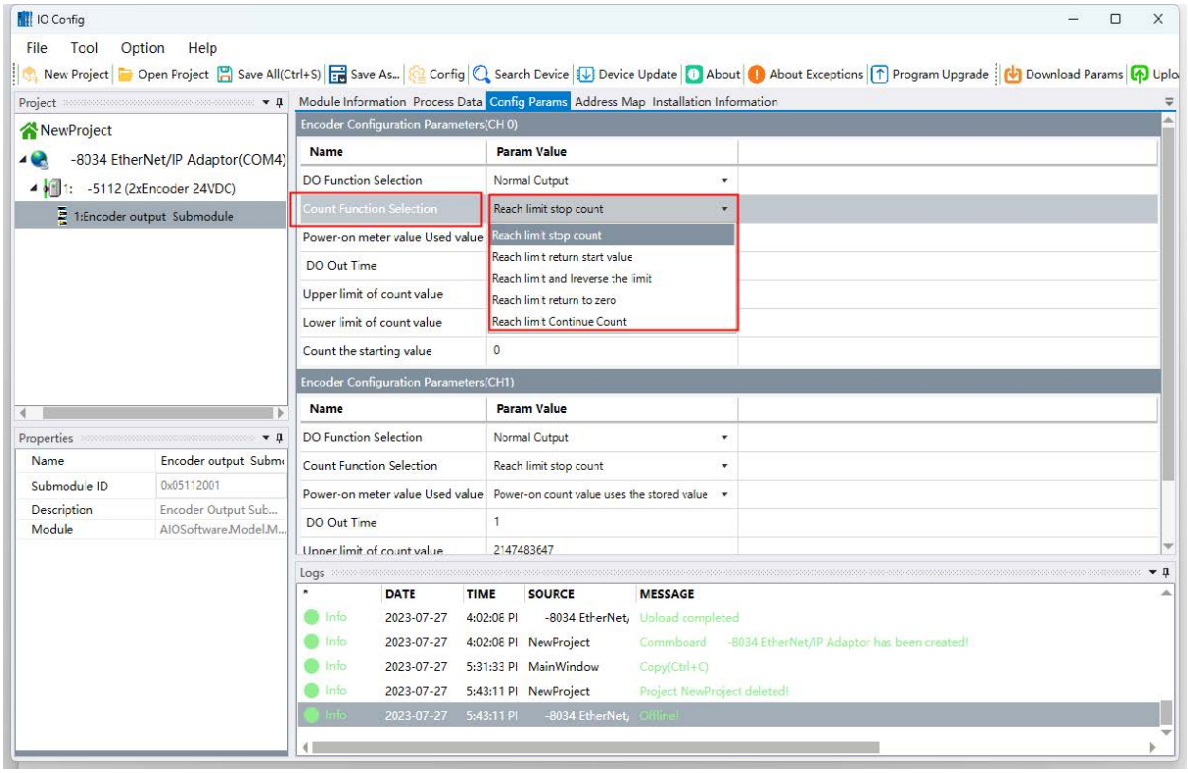

“Reach limit stop count” is the default parameter of the “NT-5112 Encoder output Submodule” configuration parameter “Count Function Selection” option. When the “Count Function Selection” option is this parameter, and when the NT-5112 Counter Value reaches the “Upper limit of count value” or “Lower limit of count value”, and “NT- 5112 Counter Value” will stop counting up or down.

Reach limit return start value

When the “Encoder output Submodule” configuration parameter “Count Function Selection” option parameter is set to this parameter, and when the “NT-5112 Counter Value” reaches the Upper limit of count value or Lower limit of count value, and “Count the starting value” will be assigned to the “NT-5112 Counter Value”.

Reach limit and reverse the limit

When the “Encoder output Submodule” configuration parameter “Count Function Selection” option parameter is set to this parameter, when the “NT-5112 Counter Value” reaches the “Upper limit of count value”, and it will assign the “Lower limit of count value” to “NT-5112 Counter Value”, on the contrary, when the “NT-5112 Counter Value” reaches the “Lower limit of count value”, and it will assign the “Upper limit of count value” to “NT-5112 Counter Value”.

Reach limit return to zero

When the “Encoder output Submodule” configuration parameter “Count Function Selection” option parameter is set to this parameter, when the “NT-5112 Counter Value” reaches the Upper limit of count value or Lower limit of count value, and “0” will be assigned to the “NT-5112 Counter Value”.

Reach limit Continue Count

When the “Encoder output Submodule” configuration parameter “Count Function Selection” option parameter is set to this parameter, when the “NT-5112 Counter Value” reaches the “Upper limit of count value” or “Lower limit of count value”, and the NT-5112 Counter Value will not be affected.

7.3 Power-on meter value Used value

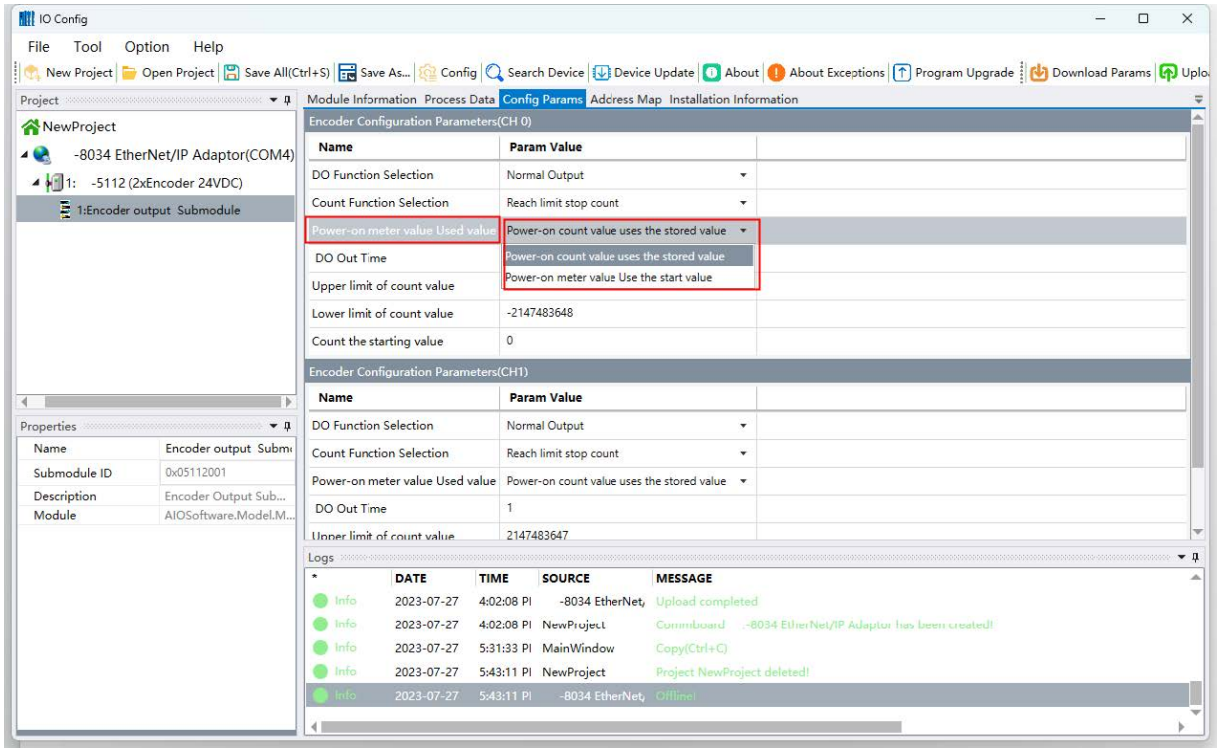

Power-on count value uses the stored value

"Power-on count value uses the stored value" is the default parameter of "NT-5112 Encoder output Submodule" configuration parameter "Power-on meter value Used value" option, when "Power-on meter value Used value" option is this parameter, and "NT-5112 Counter Value" will be based on NT-5112 configures whether the parameter counter storage option is enabled to perform corresponding initialization.

Power-on meter value Use the start value

When the "Encoder output Submodule" configuration parameter "Power-on meter value Used value" option parameter is set to this parameter, the initial value of "NT-5112 Counter Value" will be "Count the starting value" (if the NT-5112 configuration parameter counter storage option is enabled, the stored value will be overwritten with Count the starting value).

7.4 D/O Output Time

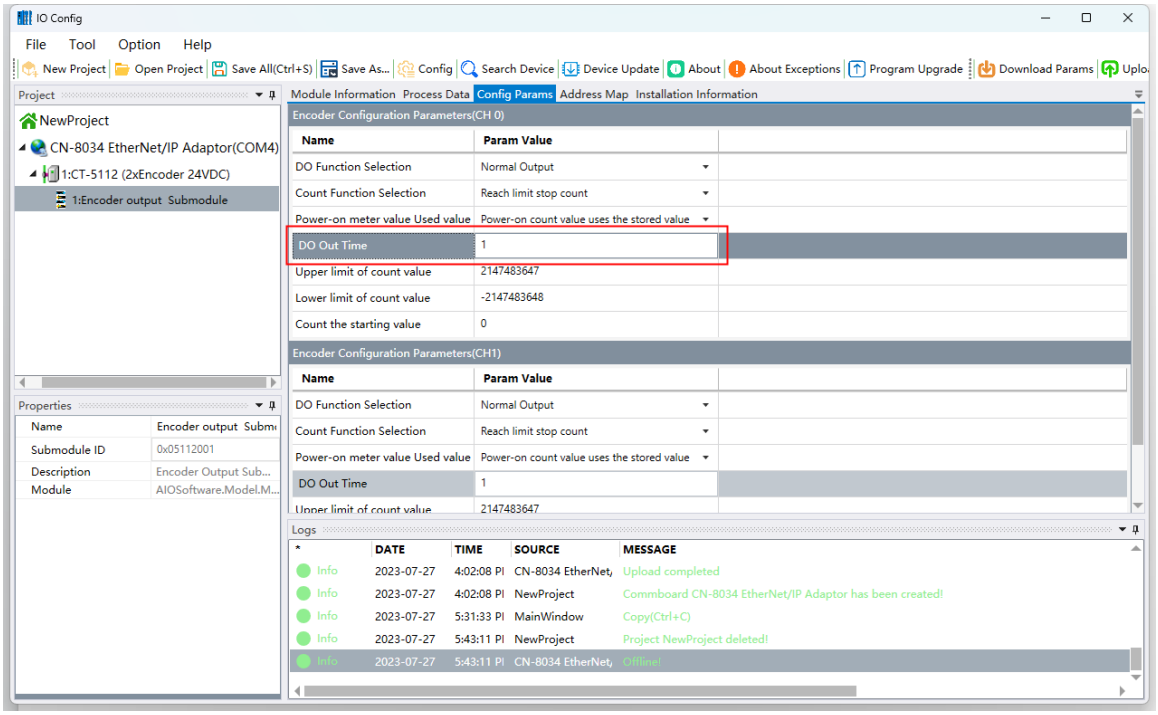

This parameter is valid only when the “Encoder output Submodule” configuration parameter “DO Function Selection” option parameter is set to “Reach Compare Value Output”, and it is a parameter of DO output time. The default value is “1”, the value range is “1-65535”, and the unit is “ms”.

7.5 Upper limit of count value

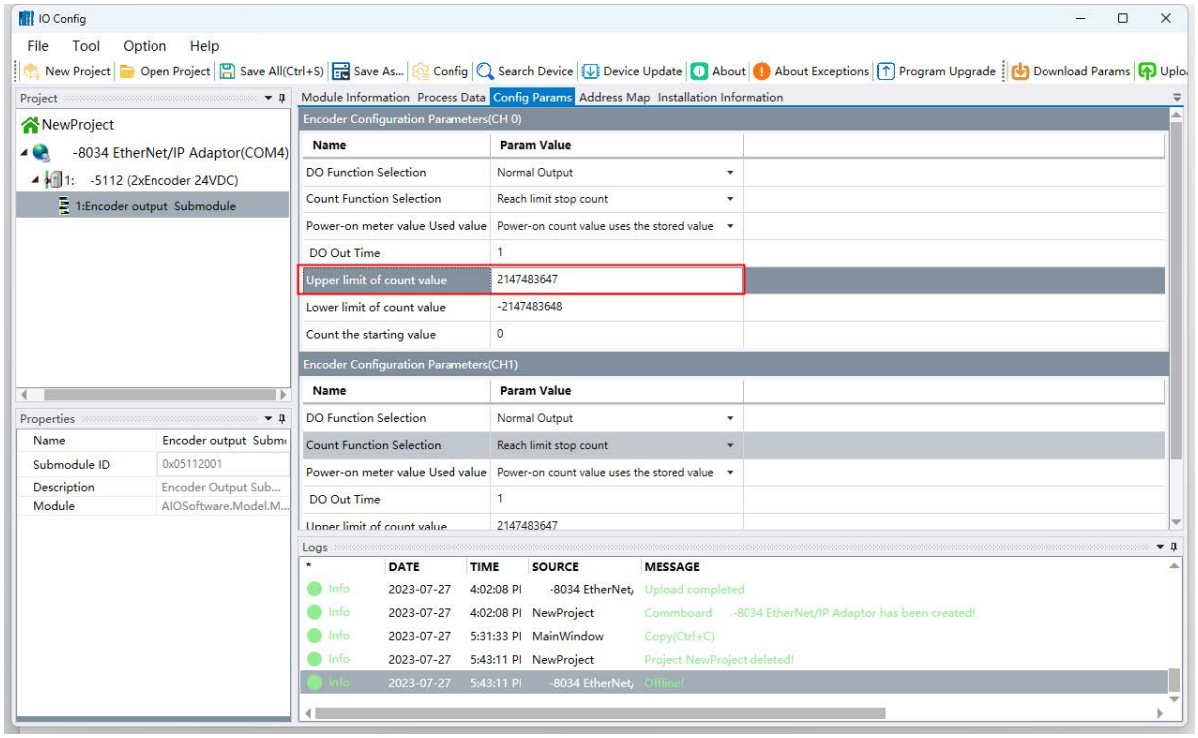

This parameter is the upper limit of “NT-5112 Count Value”, and the default value is 2147483647, and the value range is -2147483648~2147483647 (Note: “Upper limit of count value” must be bigger than “Lower limit of count value”).

7.6 Lower limit of count value

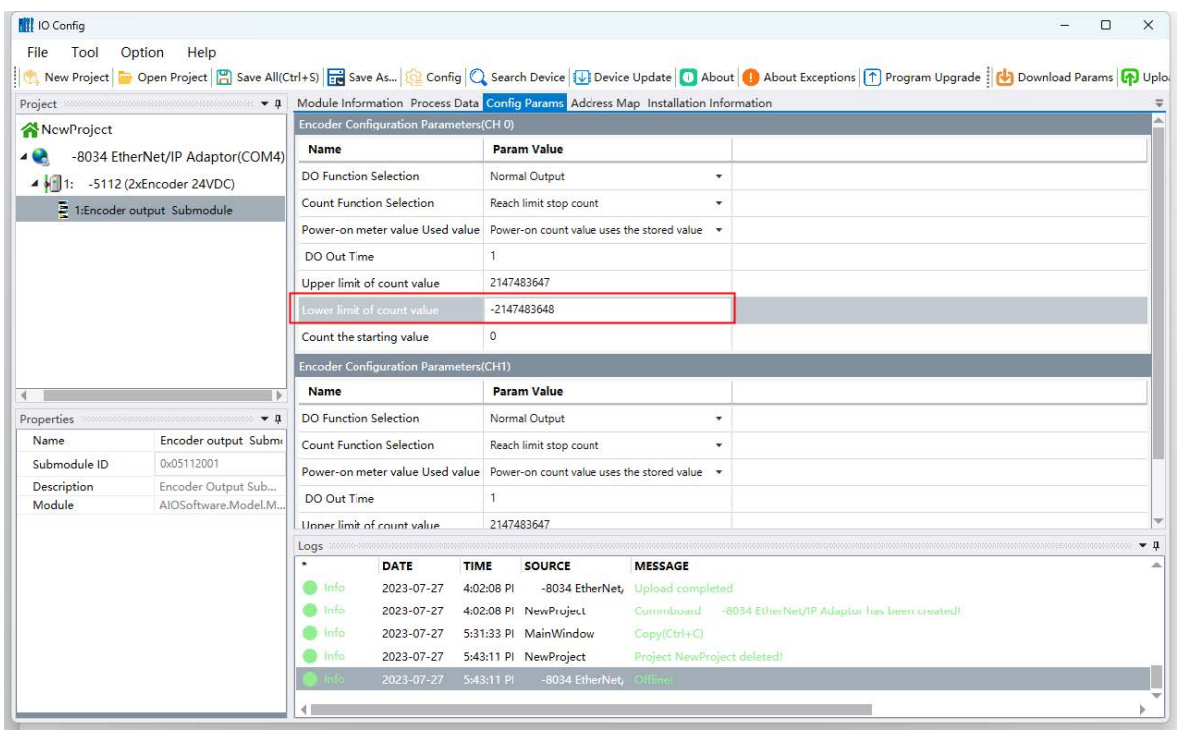

This parameter is the lower limit of “NT-5112 Count Value”, the default value is -2147483647, and the value range is -2147483648~2147483647 (Note: “Lower limit of count value” must be smaller than “Upper limit of count value”).

7.7 Count the starting value

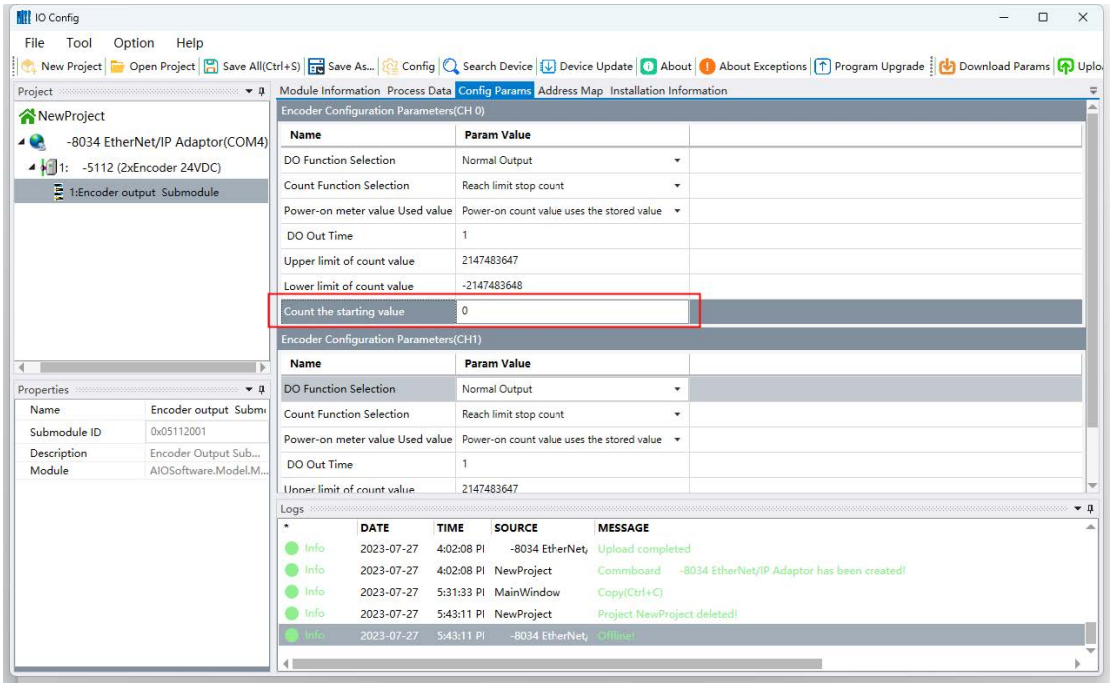

The default value is “0”, and the value range is -2147483648~2147483647.

8 NT-5112 Submodule process data description

8.1 IO Input

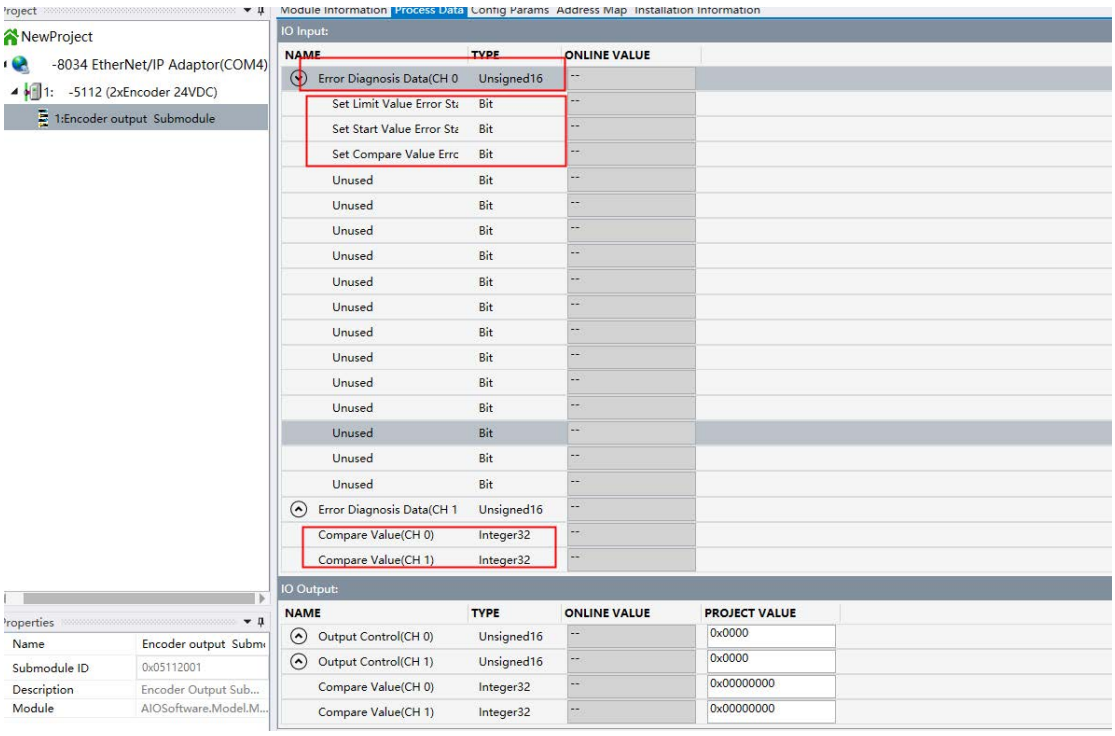

Error Diagnosis Data

8.1.1 Set Limit Value Error Status

Set the error flag bit of “Upper limit of count value” or “Lower limit of count value”. This error will be reported when the “Upper limit of count value” is less than or equal to the “Lower limit of count value”. When the “Encoder output Submodule” configuration parameter “Count Function Selection” option parameter is set to “Reach limit return to zero”, and 0 is not within the range of Upper limit of count value and Lower limit of count value, and this error will be reported.

8.1.2 Set Start Value Error Status

Set the “Count the starting value” error flag bit. This error will be reported when “Count the starting value” is not within the range of “Upper limit of count value” and “Lower limit of count value”.

8.1.3 Set Compare Value Error Status

Set the “Compare Value” error flag bit. This error will be reported when “Compare Value” is not within the range of “Upper limit of count value” and “Lower limit of

count value”. (Note: When any of the above error states exists, the count control and DO output of the sub-module will be invalid.)

8.1.4 Compare Value

Pulse comparison value, 32-bit signed integer, after the “Compare Value” of “IO Output” area is correctly set and enabled through the sub-module process data (IO Output), and this parameter will display the corresponding value, which is convenient for users to observe whether the “Compare Value” is written correctly.

8.2 IO Output

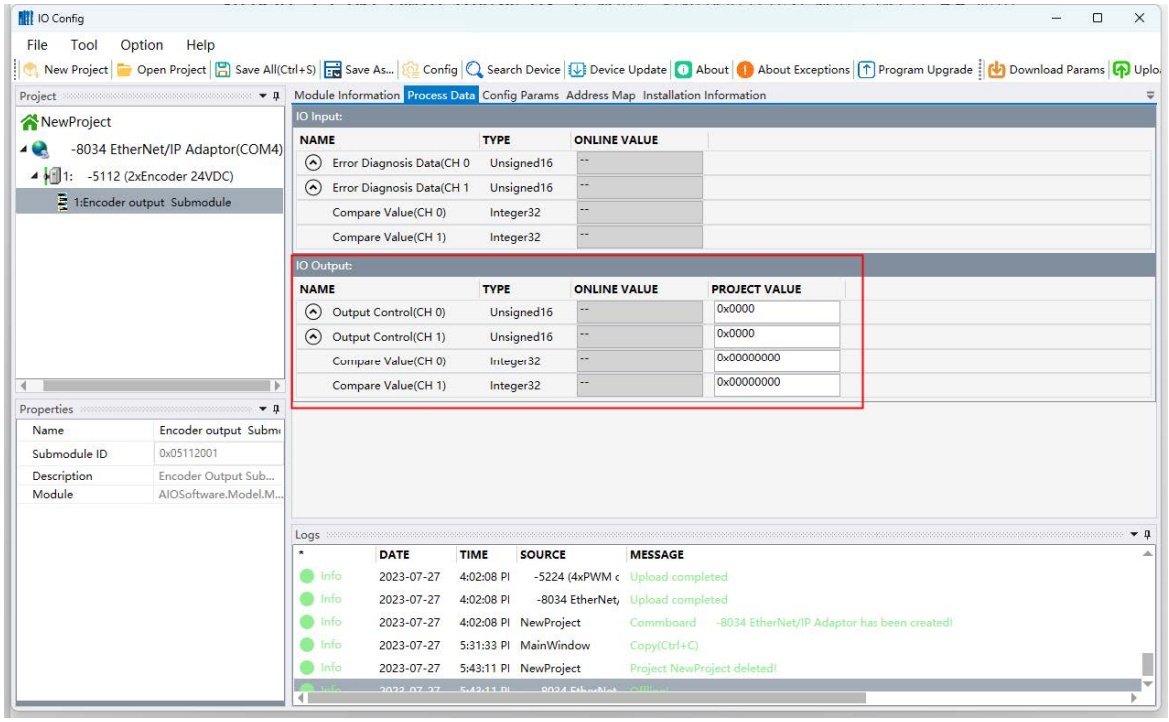

8.2.1 Output Control

1) Compare Control Bit

The pulse comparison value sets the trigger bit, the rising edge triggers the comparison value setting, the output value and “Compare Value” will be updated to the input value “Compare Value”, and keep the pulse comparison output of this bit running normally.

2) Compare Value

Pulse compare value, 32-bits signed integer.

9 NT-5112 Sub-module Communication Example

9.1 Add sub-module

1) Open the IO Config (software)，create a new project

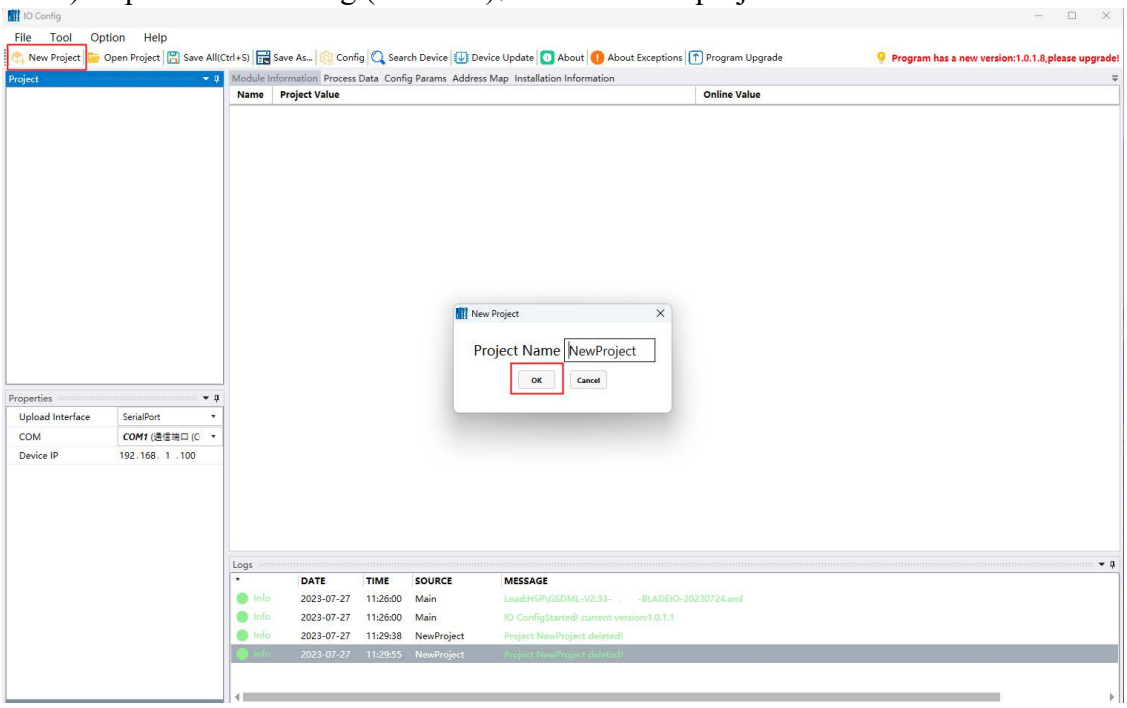

2) Select the serial port interface, select the serial port number corresponding to the device, and click “Upload Module”.

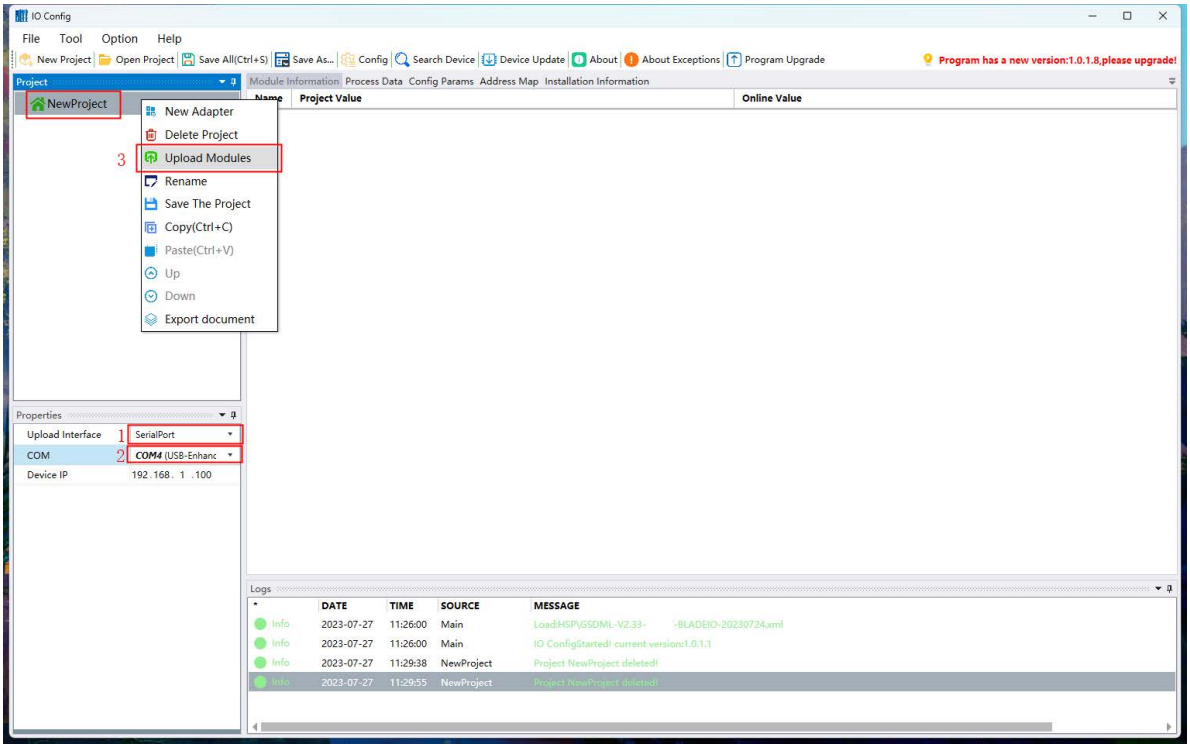

3) Click NT-5112, and right click Submodule Manager to add the NT-5112 Encoder output Submodule.

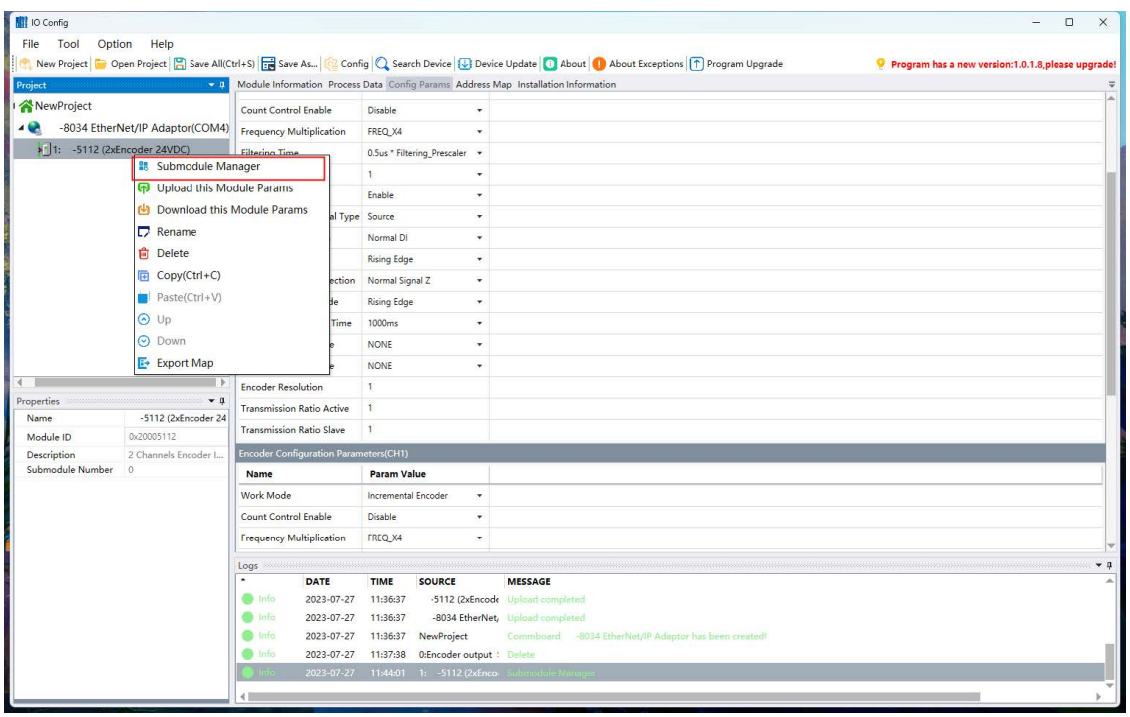

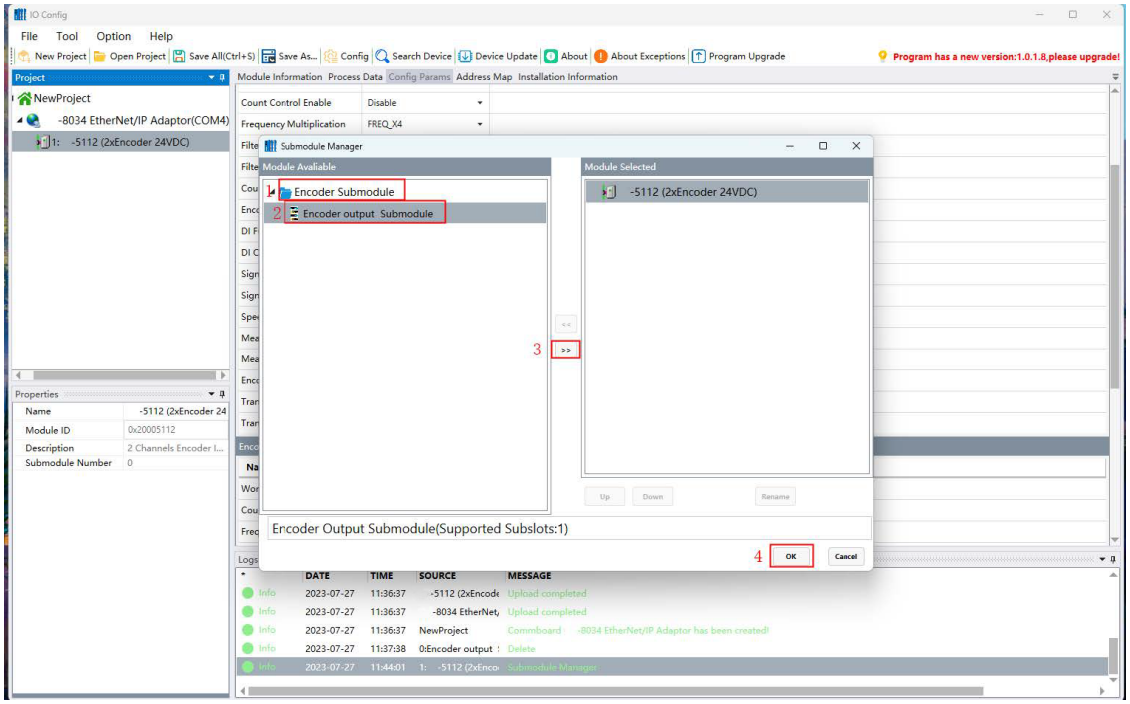

4) Click the adapter to download the parameters and complete the adding of sub-modules.

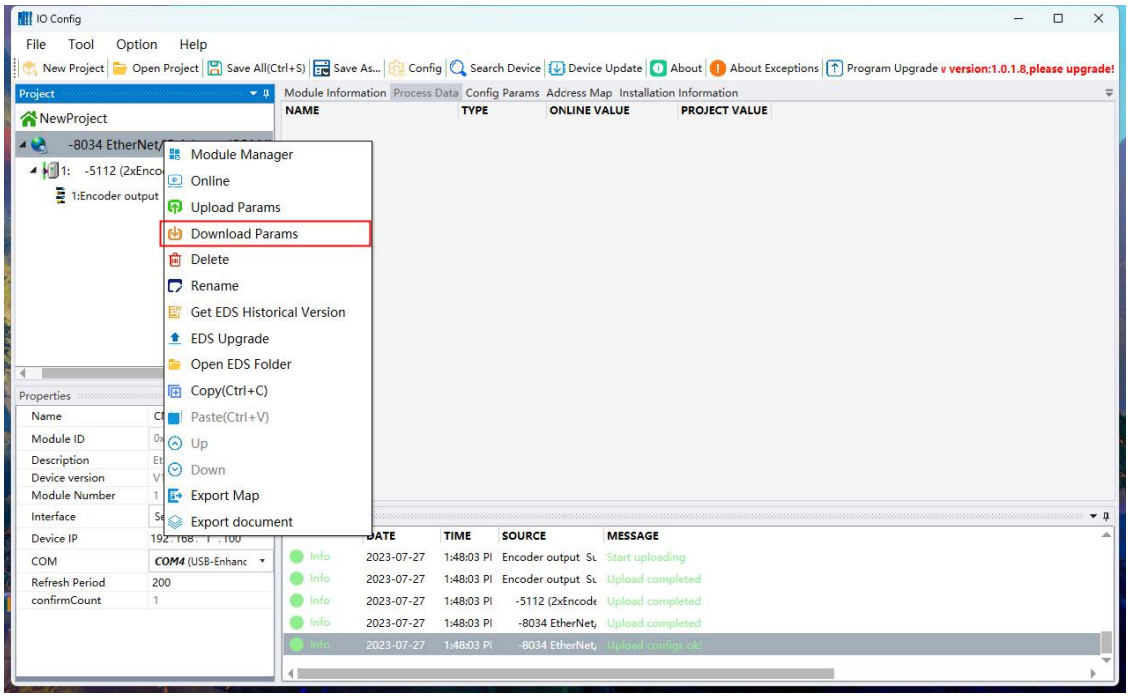

9.2 Sub-module parameter configuration and function display

1) Click “Encoder output Submodule” to configure submodule parameters. The example configuration details are shown in the figure below.

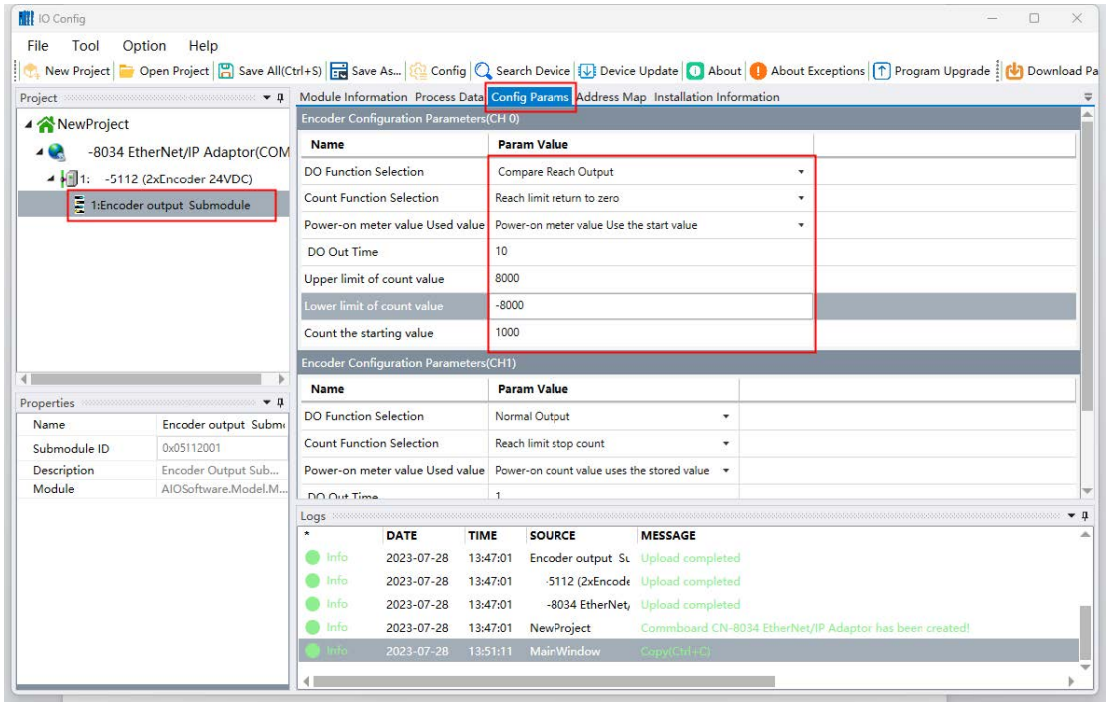

2)Click on the adapter to download the parameters.

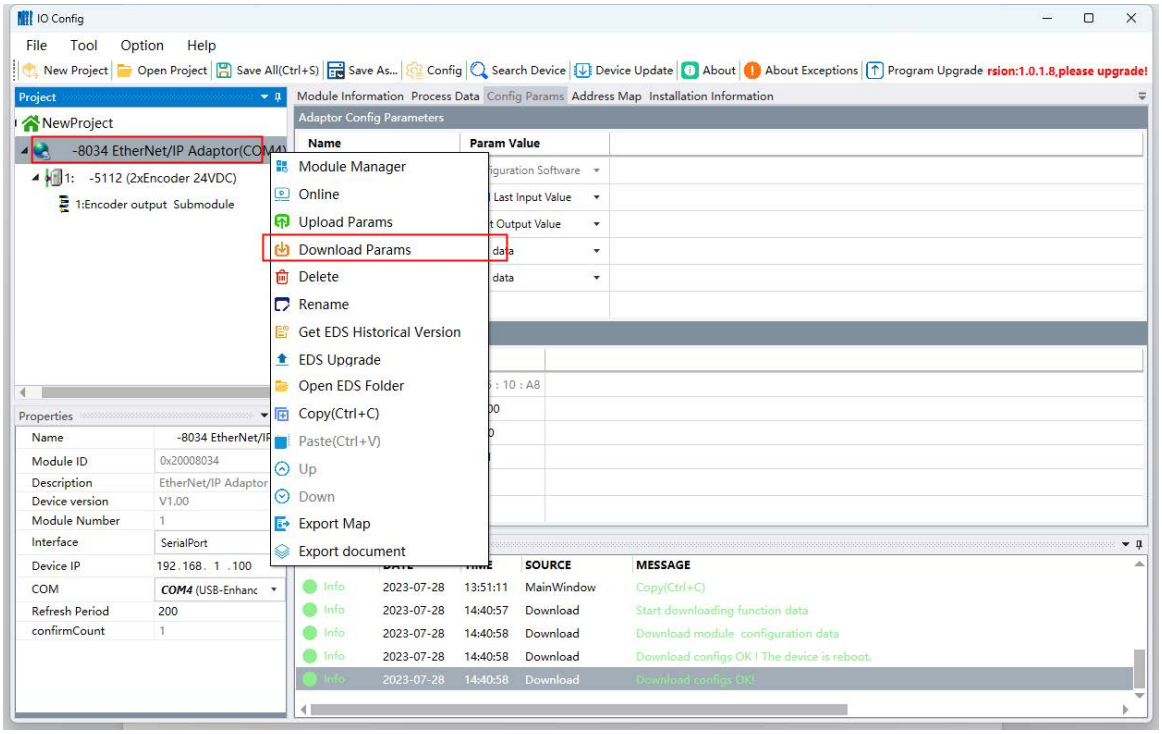

3) Click the adapter, right click the Online, and click the CT-5112 sub-module process data, and select decimal display.

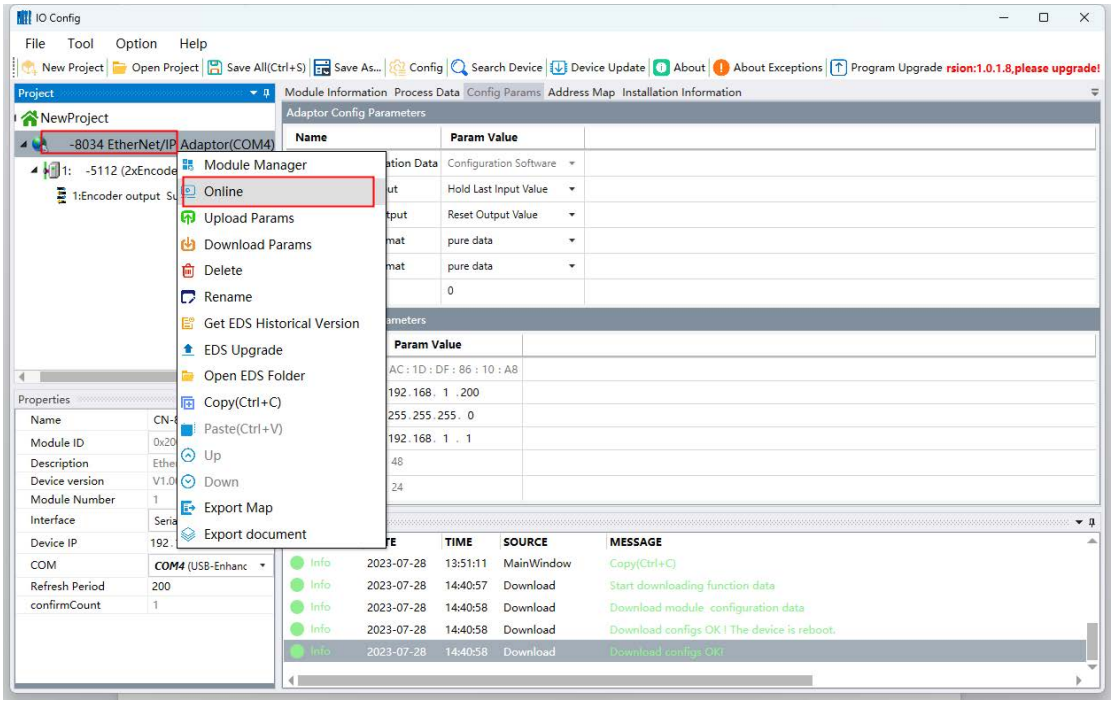

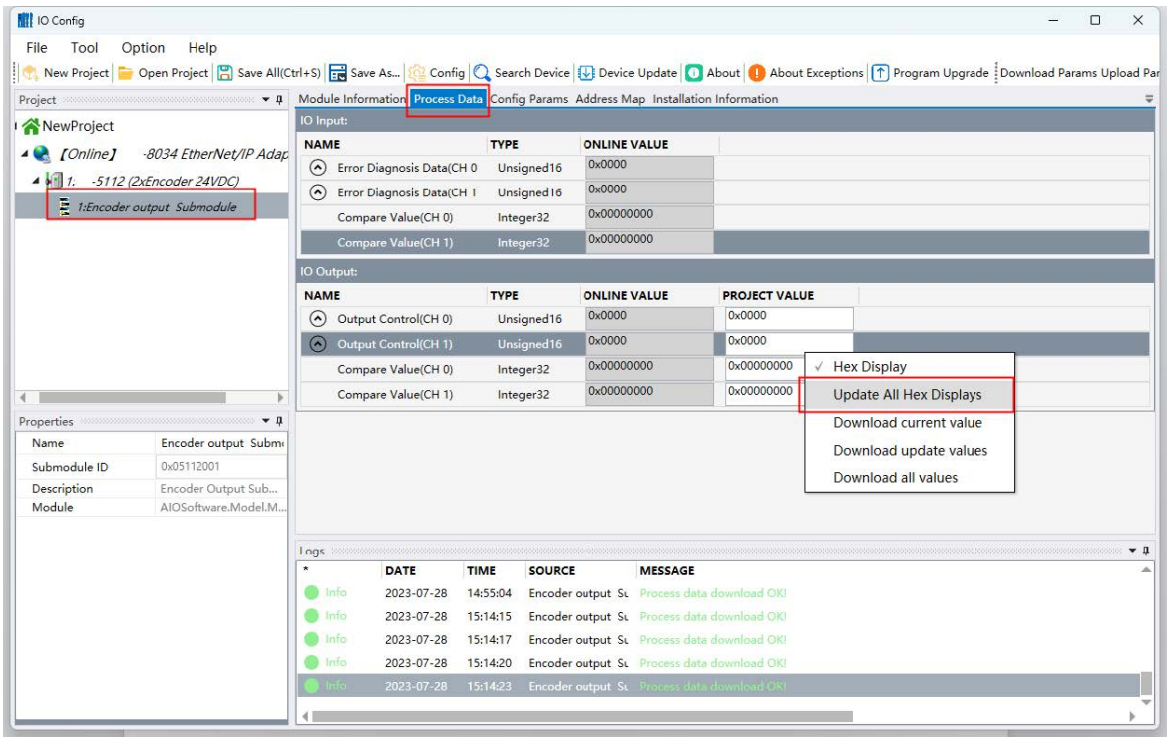

4) Check the status of “Error Diagnosis Data” to ensure that the configuration parameters are set correctly.

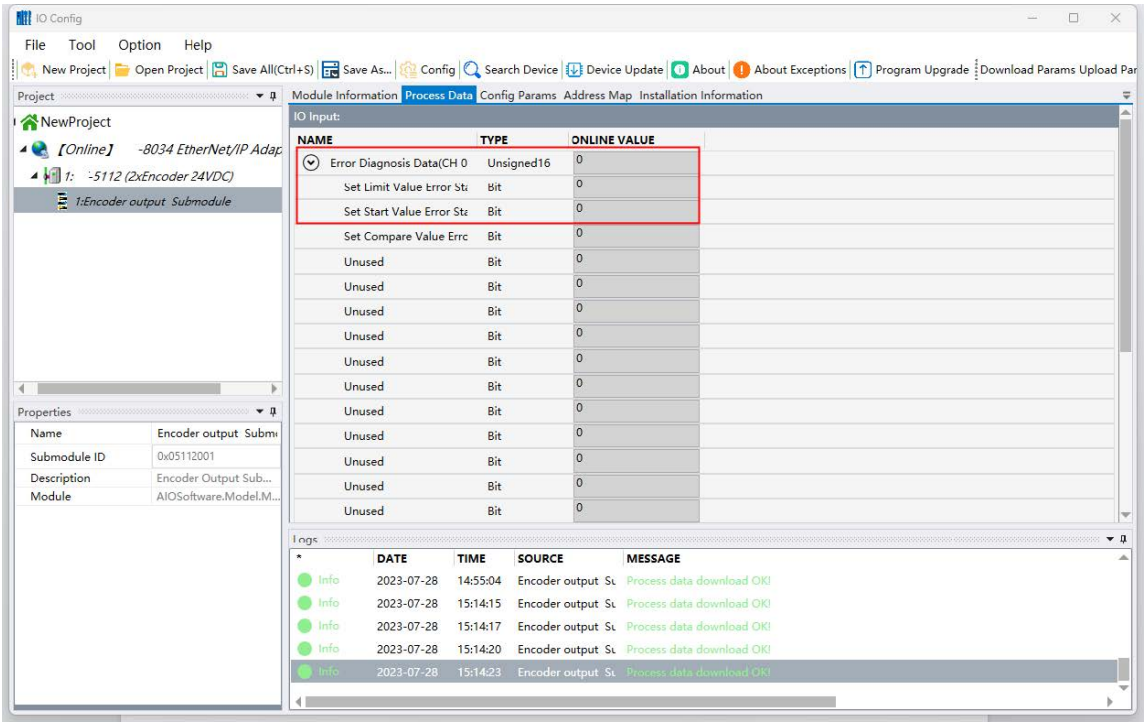

5) Assign 4000 to “Compare Value (ch0)”.

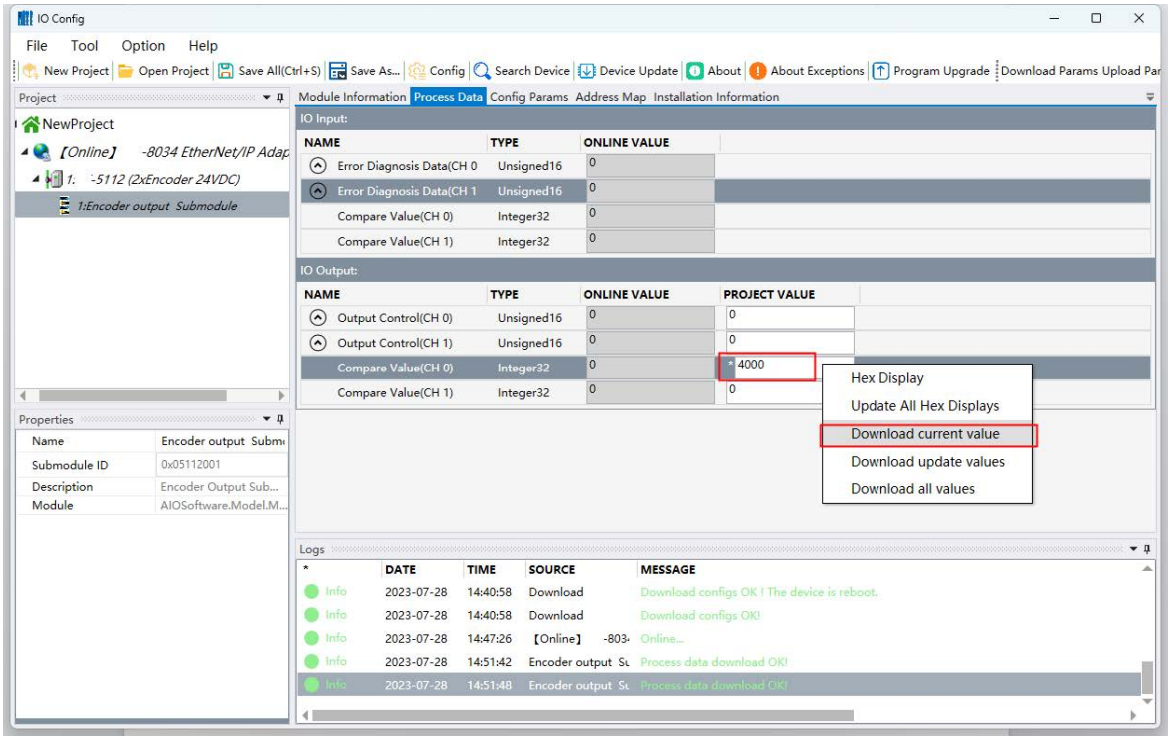

6) The rising edge triggers “Compare Control”, and the “Compare Value (ch0)” will be set as the pulse comparison value and latched.

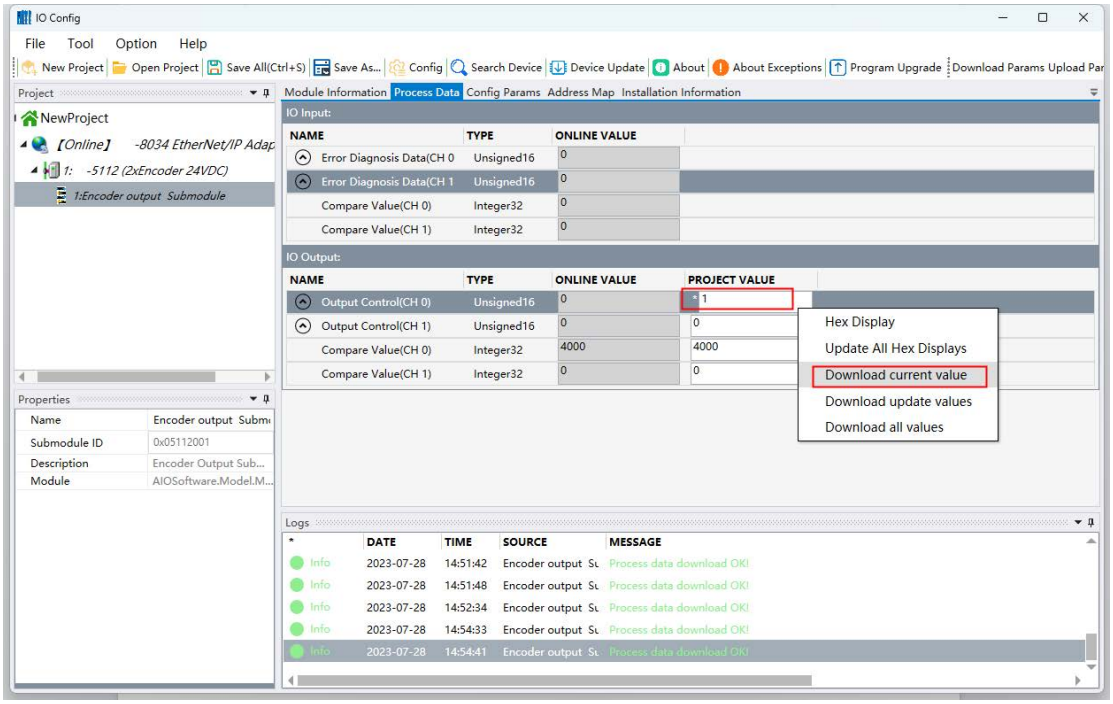

7) Check the status of “Error Diagnosis Data” to ensure that the “Compare Value” is set correctly, check whether the “IO Input Compare Value” is consistent with step 5, and ensure that the parameters are written correctly.

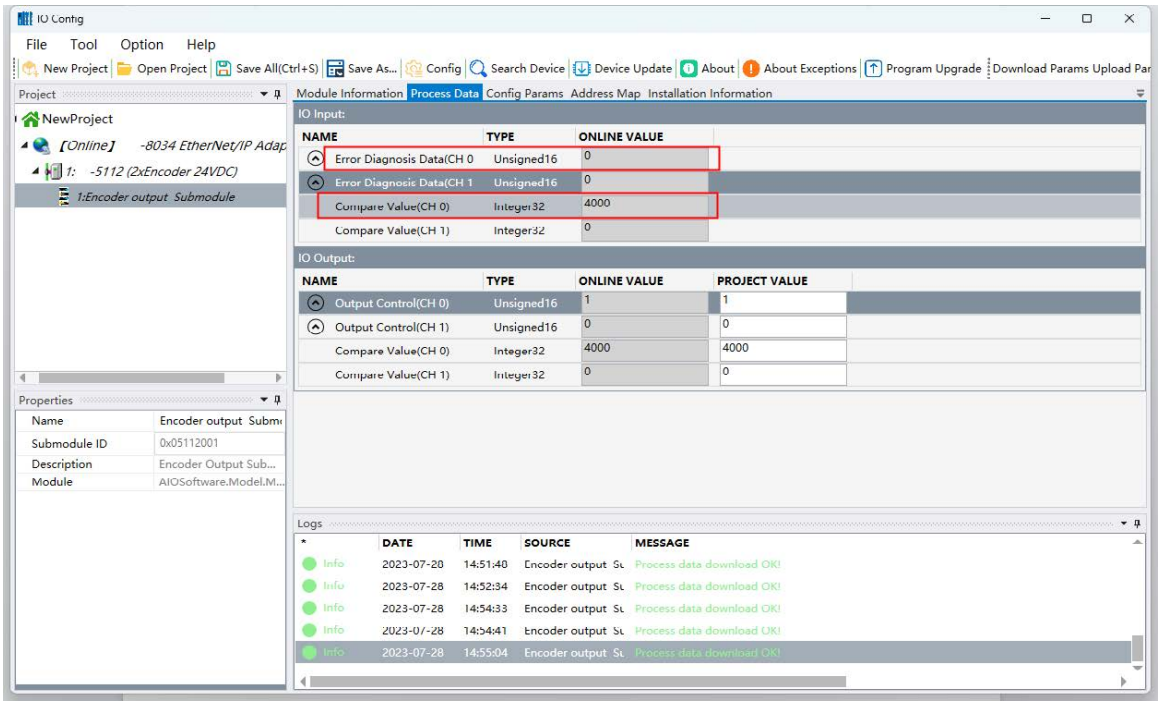

8) C ck NT-5112, and click NT-5112 process data, it can see that the “Counter Value” is “Count the starting value”, which is consistent with the configuration parameters of the sub-module in step 1.

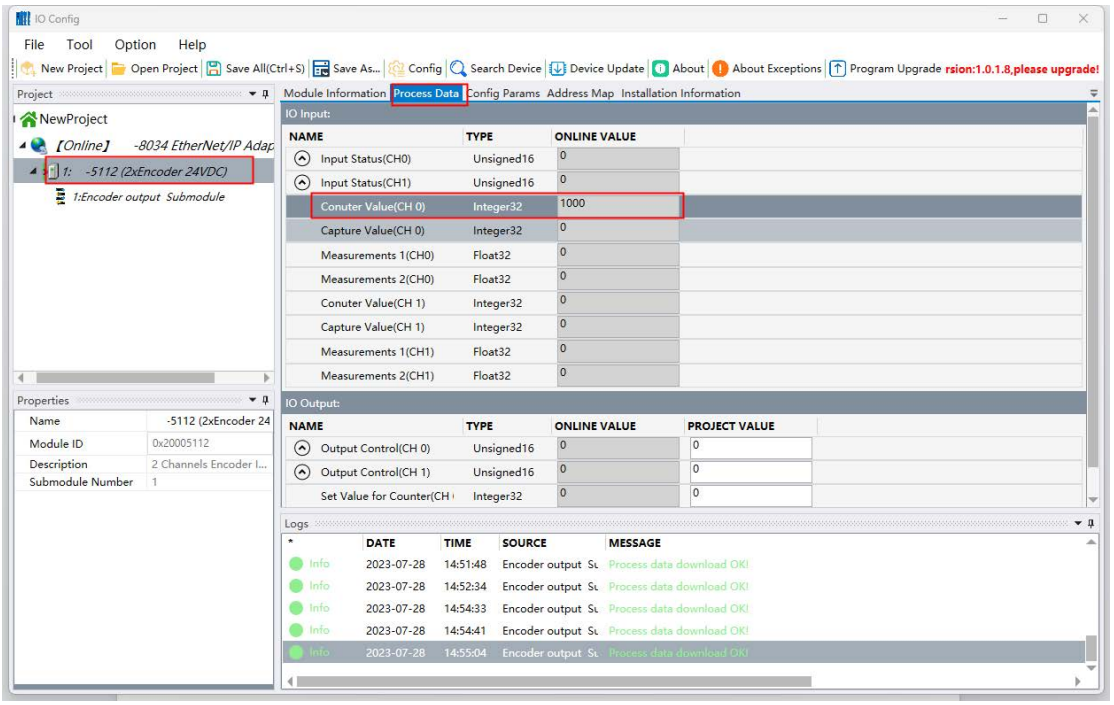

9) Turn the encoder forward to monitor the value of the counter value (ch0). When the “counter value” reaches the pulse comparison value of 4000, and DO will output a high-level signal. When the “counter value” reaches 8000, clear the count value and restart the pulse comparison.

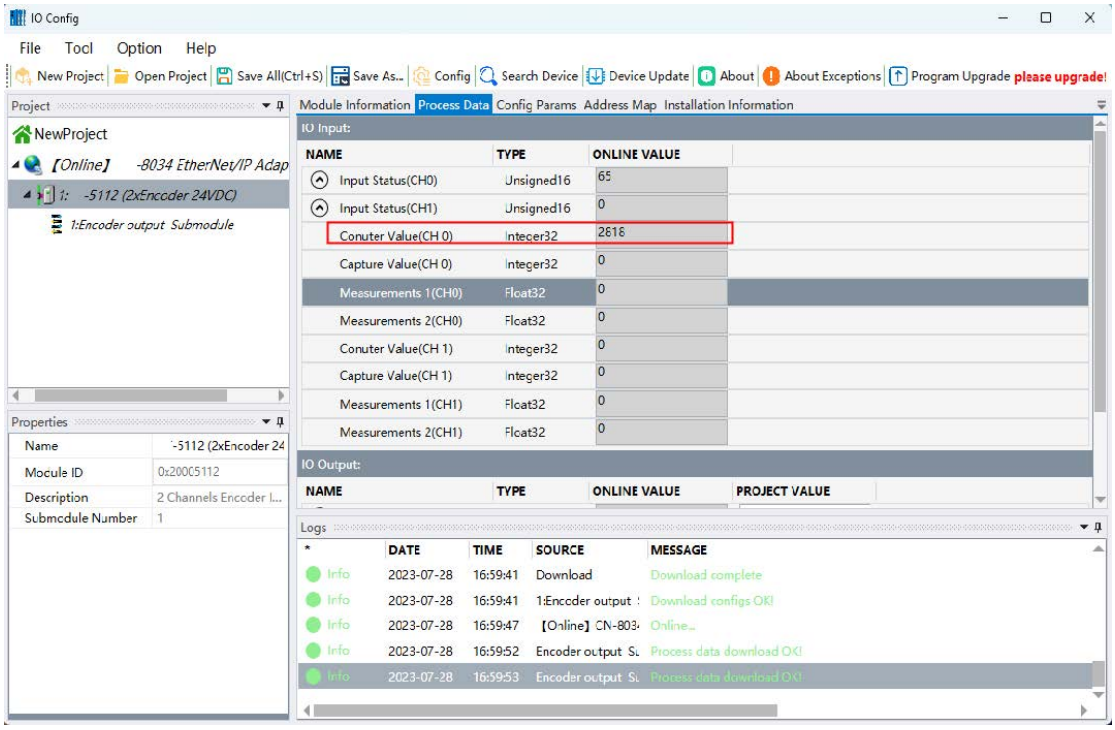

10) bserve that the pulse width of the DO output is 10ms through the oscilloscope, which is consistent with the configuration parameters.

11) Turn the encoder in reverse, monitor the value of counter value (ch0), when the counter value reaches -8000, clear the count value.

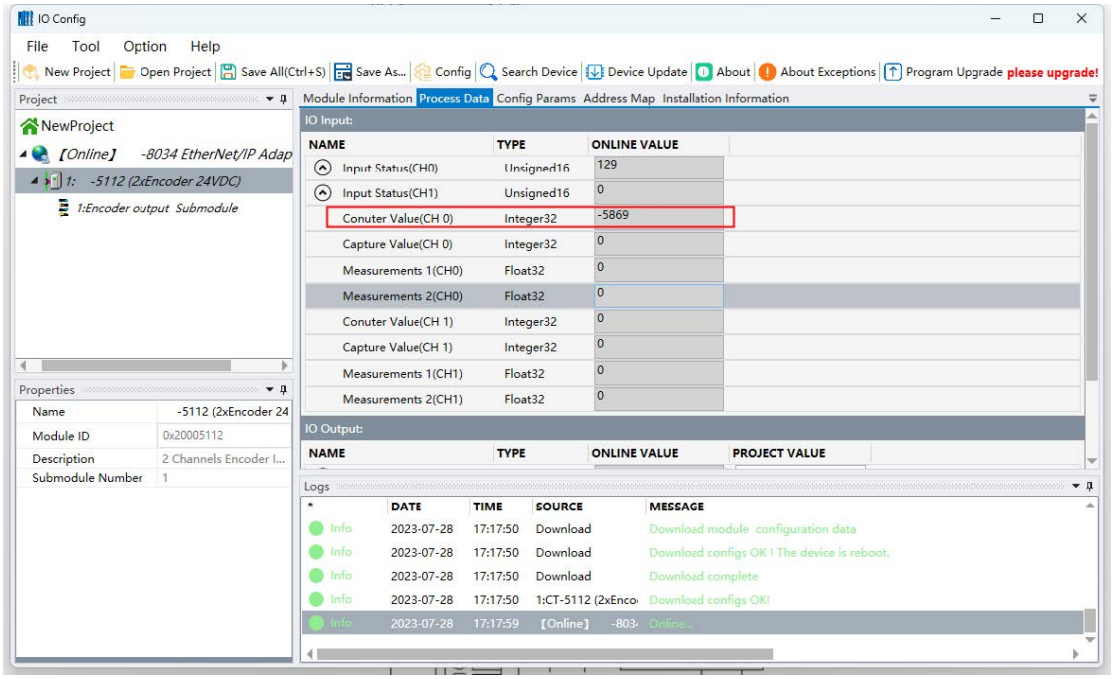

12) Set the “Output Value” – “Compare Control” bit to 0.

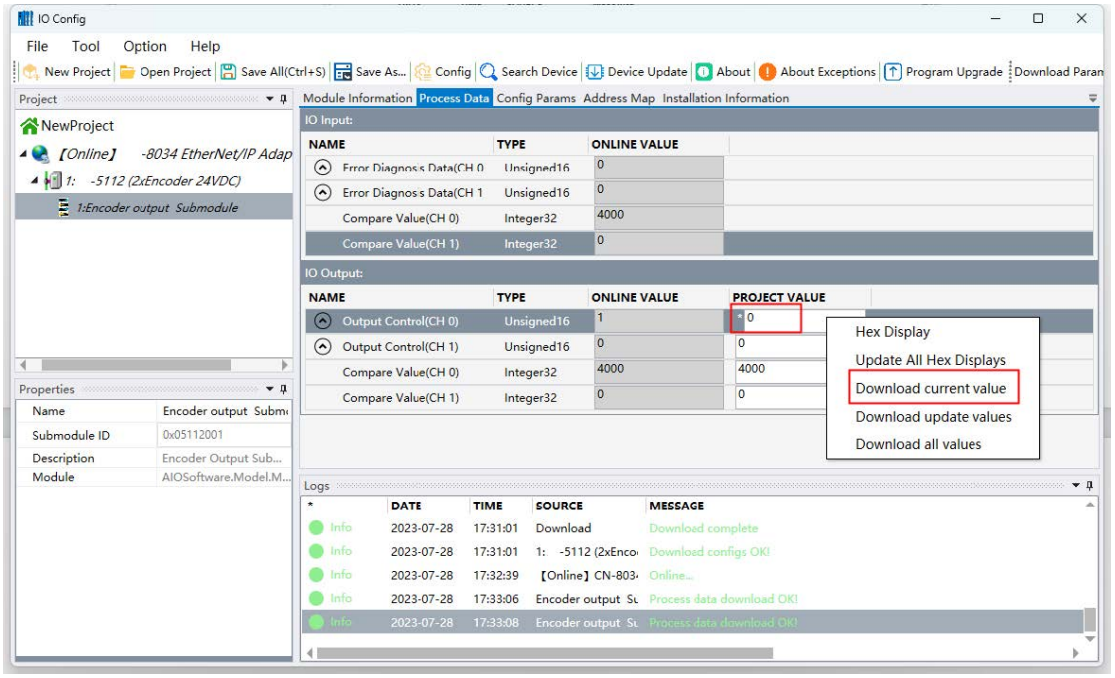

13) Turn the encoder forward to monitor the counter value (ch0). When the counter value reaches the pulse comparison value of 4000, DO will have no output. When the counter value reaches 8000, and it will clear the count value.

NT-5122 2-channels encoder/SSI input

1 Module features

- the module supports two channels of SSI encoder input.
- each encoder channel supports SSI absolute encoder signal input.
- each encoder channel supports 1 digital input signal with an input voltage of 5Vdc or 24Vdc.
- each encoder channel supports 1 digital output signal with an output voltage of 5Vdc.
- the module internal bus and field input adopt magnetic isolation
- the module carries 16 LED indicators.
- the module supports the maximum clock frequency of 2MHz.
- the encoder reading interval time could be set.
- The data bit length and the start and end bit positions could be set.

2 Technical parameters

General Parameters	
Power	Max.60mA@5.0Vdc
Isolation	I/O to internal bus: magnetic isolation (3KVrms)
Field Power	Nominal:24Vdc, Range:20-28Vdc
Wiring	Max.1.0mm² (AWG 17)
Mounting Type	35mm DIN-Rail
Size	115*14*75mm
Weight	65g
Environment Specification	
Operational Temperature	-40~85℃
Operational Humidity	5%-95% (No Condensation)
Ingress Protection Rating	IP20
Input Parameters	
Channel Number	2-channel encoder
LED Indicator	16 channel input LED indicator
Encoder signal type	Differential signal, 5V
Data frame length	10-40 bit
Position value length	Maximun of 32 bit
Position value format	Supports gray code or binary
Location value LSB/MSB	Settable
SSI encoder clock frequency	≤2MHz
DI turn-on voltage	Min.5Vdc to Max.28Vdc
DI turn-off voltage	Max.2.7Vdc
DI turn-on current	Max.5mA/channel@28V
DI input impedance	>10.0kΩ
DI input delay	OFF to ON: Max.3ms ON to OFF: Max.2ms
DO output voltage	5V，range ±10%
DO output current	Max.500mA
DO output sink current	Max.5uA

3 Hardware interfaces

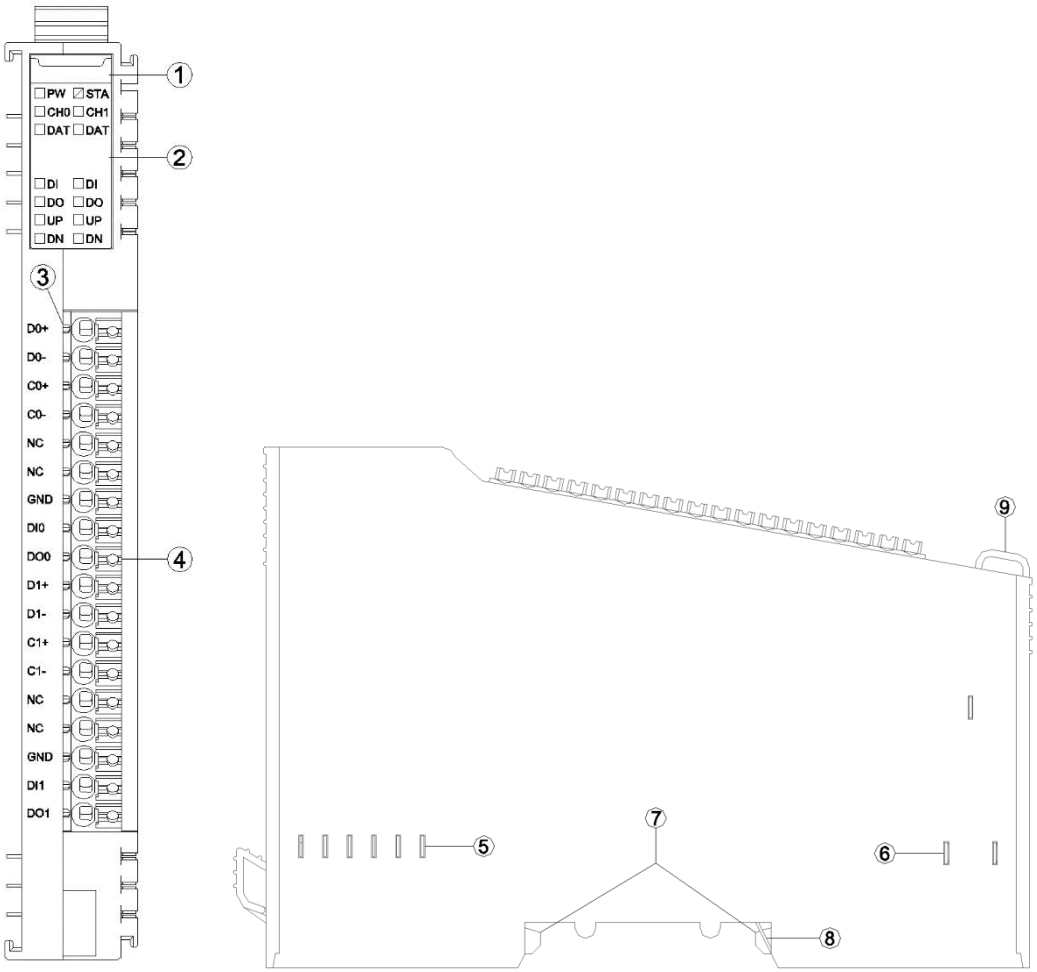

① Module Type

② State indicator

③ Channel indicator

④ Wiring Terminal and identification

⑤ Internal Bus

⑥ Field Power

⑦ Buckle

⑧ Grounding Spring Sheet

⑨ Fixed Wiring Harness

3.1 LED indicator definition

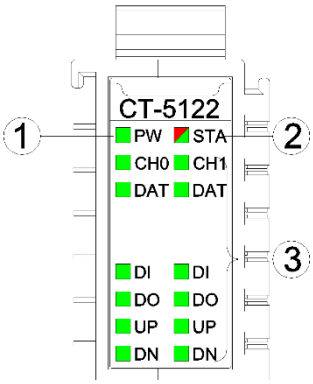

① Power LED indicator (green)

② Module State indicator LED (red/green)

③ Input channel indicator LED (green)

PW Power State	Definition
ON	Internal bus power supply normal
OFF	Internal bus power supply failure
STA Module State	Definition
Green slow flash (2.5 Hz)	Module internal bus is not started
Red slow flash (2.5 Hz)	Module internal bus offline
ON (GREEN)	Operation normal
Flash (2.5 Hz) (RED/GREEN)	updating mode
Flash (10 Hz) (RED/GREEN)	firmware update
Double Flash (RED)	Module exception has been soft-restarted
CH0 CH1 channel indicator LED	Definition
ON	Channel enable
DAT channel indicator LED	Definition
ON	The input data line is at high level when idle
OFF	The input data line is at low level when idle
DI input indicator	Definition
ON	Input signal high level
OFF	Input signal invalid
DO output indicator	Definition
ON	Output signal high level
OFF	Output signal invalid
UP indicator	Definition
ON	Encoder in positive rotation
OFF	Encoder is stationary or in contrarotation
DN indicator	Definition
ON	Encoder in contrarotation
OFF	Encoder is stationary or in positive rotation

3.2 Field channel LED indicator (Green)

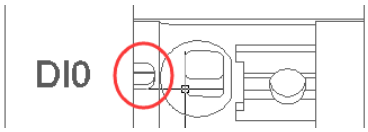

When the input signal of the input channel is valid, the corresponding field channel indicator is on (only the DI/DO wiring terminal of the encoder channel carries the indicator).

3.3 Terminal definition

Terminal Number	Symbol	Description
1	D0+	CH0 encoder data input +
2	D0-	CH0 encoder data input -
3	C0+	CH0 encoder clock output +
4	C0-	CH0 encoder clock output -
5	NC	Not connected
6	NC	Not connected
7	GND	Signal ground
8	DI0	CH0 digital signal input
9	DO0	CH0 digital signal output
10	D1+	CH1 encoder input +
11	D1-	CH1 encoder data input -
12	C1+	CH1 encoder clock output +
13	C1-	CH1 encoder clock output -
14	NC	Not connected
15	NC	Not connected
16	GND	Signal ground
17	DI1	CH1 digital signal input
18	DO1	CH1 digital signal output

It is recommended to use cables with cores smaller than 1mm².

The cold-pressed terminal parameters are as follows:

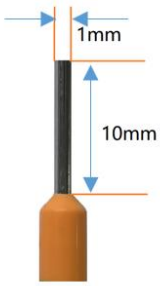

4 Wiring

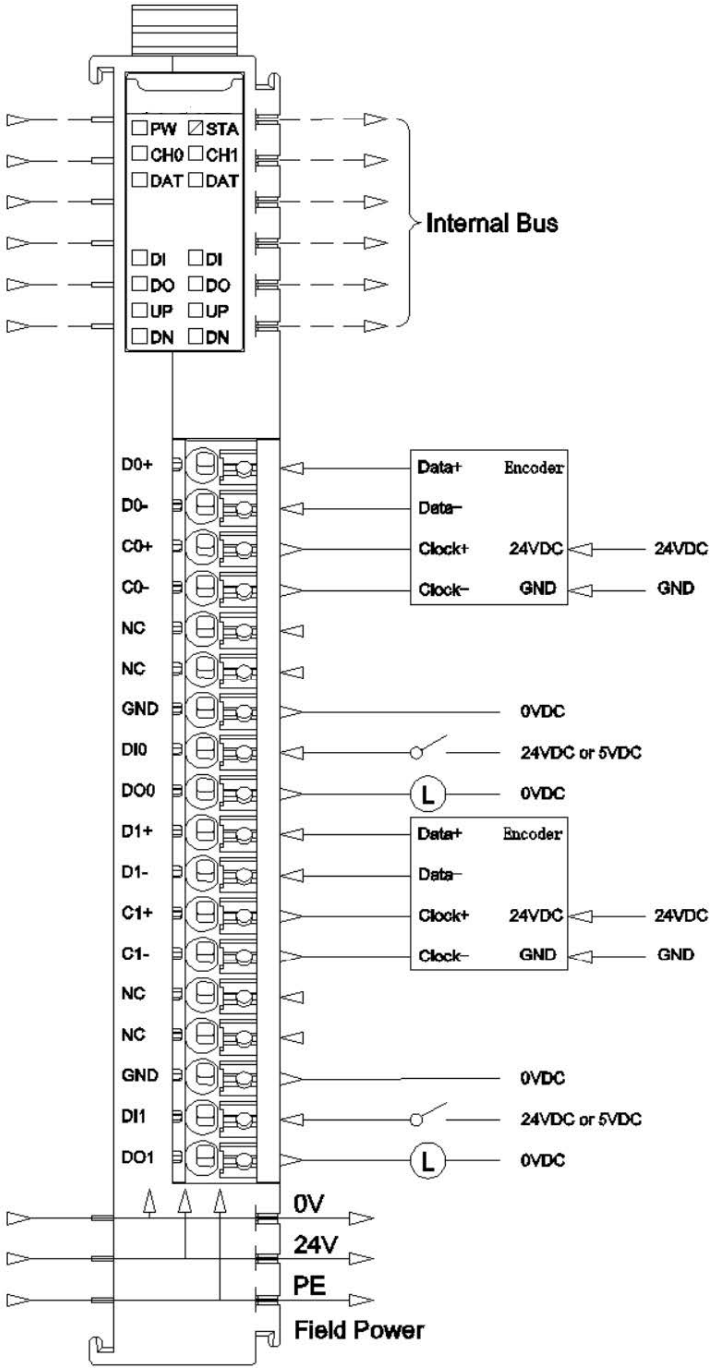
PW
STA
CH0
CH1
DAT
DAT
DI
DI
DO
DO
UP
UP
DN
DN
Internal Bus
D0+
D0-
C0+
C0-
NC
NC
GND
DI0
DO0
D1+
D1-
C1+
C1-
NC
NC
GND
DI1
DO1
Data+
Encoder
Data-
Clock+
24VDC
Clock-
GND
24VDC
GND
0VDC
24VDC or 5VDC
L
0VDC
Data+
Encoder
Data-
Clock+
24VDC
Clock-
GND
24VDC
GND
0VDC
24VDC or 5VDC
L
0VDC
0V
24V
PE
Field Power

5 Process data definition

< 2 Analog Input(SSI Encoder) > Submodule process data definition

Input Data								
Bit No	Bit 7	Bit 6	Bit 5	Bit 4	Bit 3	Bit 2	Bit 1	Bit 0
Byte 0	Reserved				Encoder Count DOWN Ch#0	Encoder Count UP Ch#0	DI Ch#0	Data Line Status Ch#0
Byte 1	Reserved							
Byte 2	Reserved				Encoder Count DOWN Ch#1	Encoder Count UP Ch#1	DI Ch#1	Data Line Status Ch#1
Byte 3	Reserved							
Byte 4	Counter value Ch#0							
Byte 5								
Byte 6								
Byte 7								
Byte 8	Capture value Ch#0							
Byte 9								
Byte 10								
Byte 11								
Byte 12	Counter value Ch#1							
Byte 13								
Byte 14								
Byte 15								
Byte 16	Capture value Ch#1							
Byte 17								
Byte 18								
Byte 19								

Output Data								
Bit No	Bit 7	Bit 6	Bit 5	Bit 4	Bit 3	Bit 2	Bit 1	Bit 0
Byte 0	Reserved							DO Ch#0
Byte 1	Reserved							
Byte 2	Reserved							DO Ch#1
Byte 3	Reserved							

Data description:

Data Line Status Ch#(0-1): Indicates the idle status of the Data line of the corresponding channel（Normally, idle data is high level. If the value is 0, the polarity of the input signal is reversed, and the polarity of the input signal line needs to be switched）.

0： Data line level is low when idle

1： Data line level is high when idle

DI Ch#(0-1)： The position is 1 when the corresponding channel input signal is valid, and 0 when the input is invalid.

0：Input signal invalid

1：Input signal valid

Encoder Count UP Ch#(0-1)： The encoder counts up and in positive rotation.

Encoder Count DOWN Ch#(0-1)： The encoder counts down and in contrarotation.

Counter Value Ch#(0-1)： Pulse count value, 32 - bit signed integer, automatically clear after overflow.

Capture value Ch#(0-1)： Pulse capture value, 32-bit signed integer, and when DI is set to capture, the pulse count value will be captured to the capture value at the selected edge.

DO Ch#(0-1)： The position is 1 when the corresponding channel output signal is valid, and 0 when the output is invalid.

0：Output signal invalid

1：Output signal valid

6 Configuration parameters definition

<2 Analog Input(SSI Encoder)> Submodule configuration parameter definition

Configuration Parameter								
Bit No	Bit 7	Bit 6	Bit 5	Bit 4	Bit 3	Bit 2	Bit 1	Bit 0
Byte 0	Reserved					16Bit Data Format	32Bit Data Format	
Byte 1	Reserved		Frame Bit Length Ch#0					
Byte 2	Reserved				SSI CLK Frequency Ch#0			
Byte 3 Byte 4	SSI Interval Time Ch#0							
Byte 5	Reserved							Gray Conversion Ch#0
Byte 6	Reserved		LSB Bit of Position Value Ch#0					
Byte 7	Reserved		MSB Bit of Position Value Ch#0					
Byte 8	Reserved							Counter Storage Ch#0
Byte 9	Reserved							DI Function Selection Ch#0
Byte 10	Reserved						Capture Mode Ch#0	
Byte 11 … Byte 30	Reserved							
Byte 31	Reserved		Frame Bit Length Ch#1					
Byte 32	Reserved				SSI CLK Frequency Ch Ch#1			
Byte 33 Byte 34	SSI Interval Time Ch#1							
Byte 35	Reserved							Gray Conversion Ch#1
Byte 36	Reserved		LSB Bit of Position Value Ch#1					
Byte 37	Reserved		MSB Bit of Position Value Ch#1					
Byte 38	Reserved							Counter Storage Ch#1
Byte 39	Reserved							DI Function Selection Ch#1
Byte 40	Reserved						Capture Mode Ch#1	
Byte 41 …	Reserved							

Byte 60	

Data description：

16Bit Data Format： Byte transfer order of channel state. (Default: 0)

0：A-B

1：B-A

32Bit Data Format： The byte transfer order of a channel count value. (Default: 0)

0：AB-CD

1：BA-DC

2：CD-AB

3：DC-BA

Frame Bit Length Ch#(0-1)： SSI frame length of encoder. (Default value: 13) The value ranges from 10 to 40.

SSI CLK Frequency Ch#(0-1)： The clock frequency when data is read. (Default: 1)

0:125KHz

1: 250KHz

2: 500KH

3: 1.0MHz

4: 1.5MHz

5: 2.0MHz

SSI Interval Time Ch#(0-1)： Interval time (unit: 100us) the value range could be set 1 ~ 65535.

Gray Conversion Ch#(0-1)： Gray Code Conversion enabled (default: 1)

0：Disable

1：Enable

LSB Bit of Position Ch#(0-1)： LSB bit number of position value. The value range is 0 ~ 39 (default: 0)

MSB Bit of Position Ch#(0-1)： The MSB bit number of the position value. The value range is 1 ~ 40 (default: 12)

Counter Storage Ch#(0-1)： Enable storage. When the storage function is enabled, the

IO module will save the count value to the non-volatile memory in real time, and load the last saved count value at the next power-on. (Default: 1)

0：Disable

1：Enable

DI Function Selection Ch#(0-1)： DI function selection (Default: 0)

0：Normal DI function

1：Pulse capture function

Capture Mode Ch#(0-1)： Capture mode (default: 0)

0：Rising edge capture

1：Falling edge capture

2：Double edge capture

A Dimension drawing

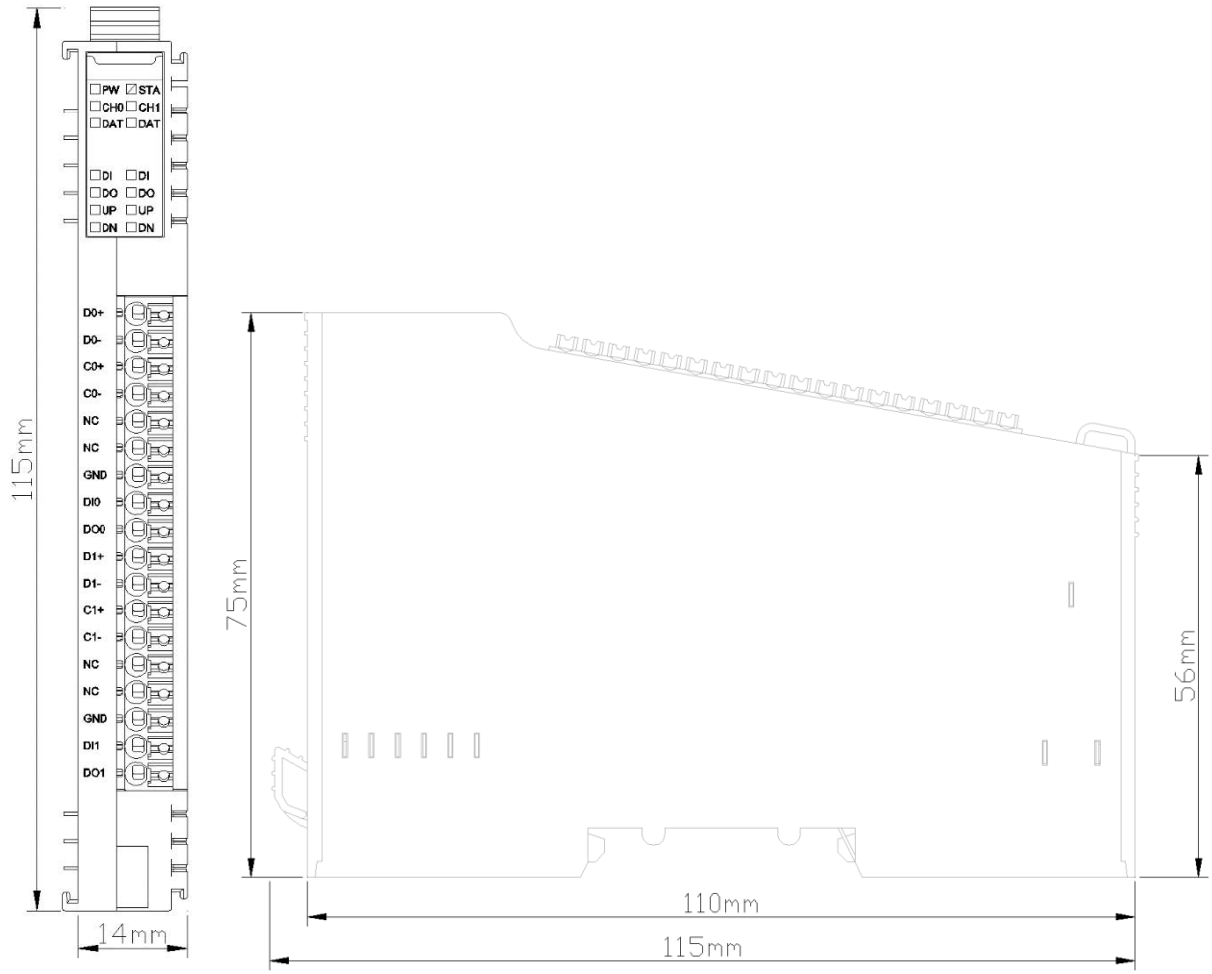

NT-5142 2-channels encoder /differential input

1 Module features

◆ the module supports two channels of encoder input.

◆ each encoder channel supports A/B incremental encoder or pulse-directional encoder input.

◆ each encoder channel supports orthogonal A/B differential signal input, voltage output range 0-5V.

◆ the incremental encoder mode supports x1/ x2 / x4 frequency multiplication mode.

◆ the pulse - direction mode supports nondirectional signal, pulse input only.

◆ each encoder channel supports 1 digital input signal with an input voltage of 5Vdc or 24Vdc.

◆ each encoder channel supports 1 digital output signal with an output voltage of 5Vdc.

◆ the module internal bus and field input adopt magnetic isolation.

◆ the module carries 16 LED indicators.

◆ the maximum input frequency of the encoder supported by the module is 10MHz.

◆ the module supports measurement function, it could detect the load speed or input signal frequency.

2 Technical parameters

General Parameters	
Power	Max.60mA@5.0Vdc
Isolation	I/O to internal bus: magnetic isolation (3KVrms)
Field Power	Nominal:24Vdc, Range:20-28Vdc
Wiring	Max.1.0mm² (AWG 17)
Mounting Type	35mm DIN-Rail
Size	115*14*75mm
Weight	65g
Environment Specification	
Operational Temperature	-40~85℃
Operational Humidity	5%-95% (No Condensation)
Ingress Protection Rating	IP20
Input Parameters	
Channel Number	2-channel encoder
LED Indicator	16 channel input LED indicator
Encoder signal type	Differential input, voltage output range of 0-5V
Encoder filtering time	Default 0.5us
Encoder count frequency	<10MHz
Encoder frequency multiplication mode	x1/x2/x4
Encoder measurement function	Load speed or input signal frequency measurement
DI turn-on voltage	Min.5Vdc to Max.28Vdc
DI turn-off voltage	Max.2.7Vdc
DI turn-on current	Max.5mA/ channel @28V
DI input impedance	>10.0kΩ
DI input delay	OFF to ON: Max.3ms ON to OFF: Max.2ms
DO output voltage	5V，range ±10%
DO output current	Max.500mA
DO output sink current	Max.5uA

3 Hardware interfaces

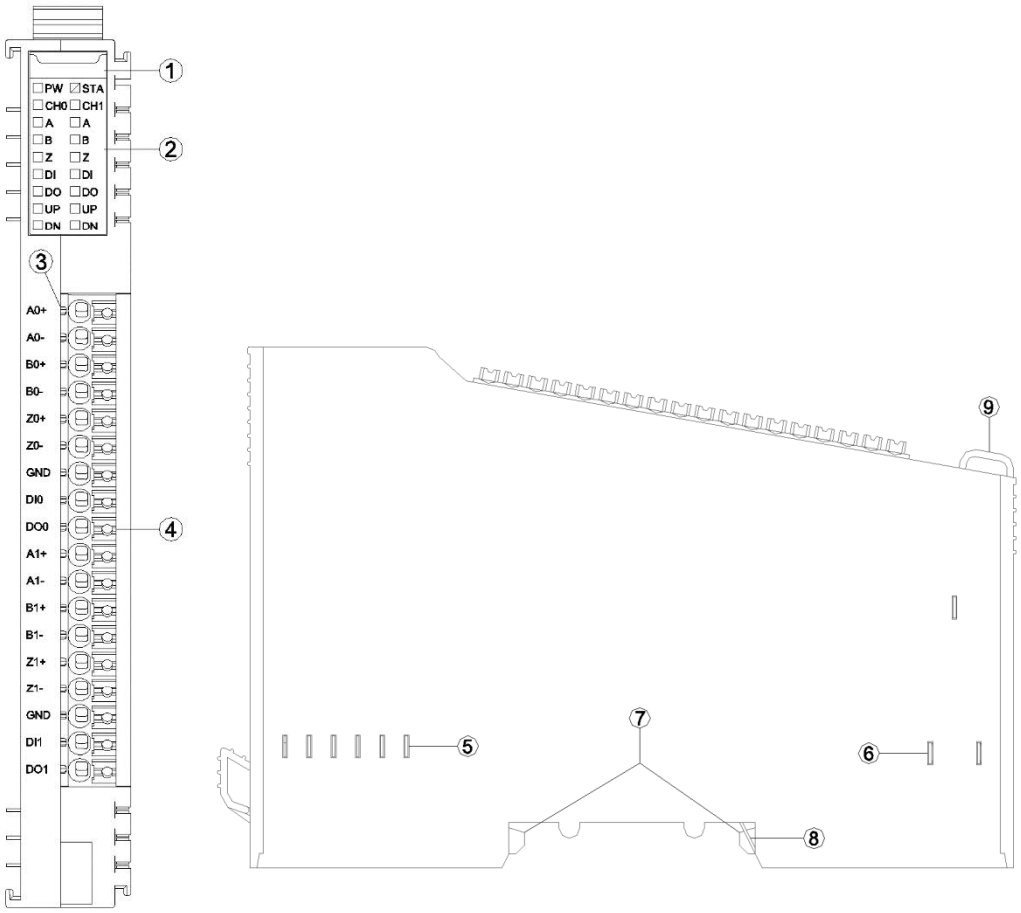

① Module Type

② State indicator

③ Channel indicator

④ Wiring Terminal and identification

⑤ Internal Bus

⑥ Field Power

⑦ Buckle

⑧ Grounding Spring Sheet

⑨ Fixed Wiring Harness

3.1 LED indicator definition

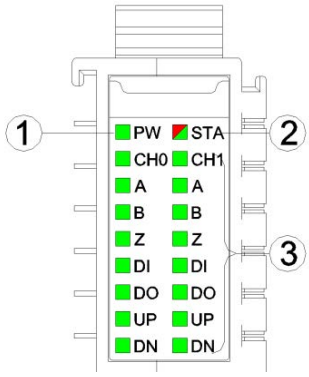

① Power LED indicator (green)

② Module State indicator LED (red/green)

③ Input channel indicator LED (green)

PW Power State	Definition
ON	Internal bus power supply normal
OFF	Internal bus power supply failure
STA Module State	Definition
Green slow flash (2.5 Hz)	Module internal bus is not started
Red slow flash (2.5 Hz)	Module internal bus offline
ON (GREEN)	Operation normal
Flash (2.5 Hz) (RED/GREEN)	updating mode
Flash (10 Hz) (RED/GREEN)	firmware update
Double Flash (RED)	Module exception has been soft-restarted
CH0 CH1 channel indicator LED	Definition
ON	Channel enable
A B Z Encoder signal indicator	Definition
ON	Input signal valid
OFF	Input signal invalid
DI input indicator	Definition
ON	Input signal high level
OFF	Input signal invalid
DO output indicator	Definition
ON	Output signal high level
OFF	Output signal invalid
UP indicator	Definition
ON	Encoder in positive rotation
OFF	Encoder is stationary or in contrarotation
DN indicator	Definition
ON	Encoder in contrarotation
OFF	Encoder is stationary or in positive rotation

3.2 Field channel LED indicator (Green)

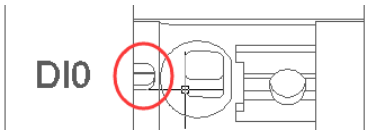

When the input signal of the input channel is valid, the corresponding field channel indicator is on (only the DI/DO wiring terminal of the encoder channel carries the indicator).

3.3 Terminal definition

Terminal Number	Symbol	Description
1	A0+	CH0 encoder phase A input +
2	A0-	CH0 encoder phase A input -
3	B0+	CH0 encoder phase B input +
4	B0-	CH0 encoder phase B input -
5	Z0+	CH0 encoder phase Z input +
6	Z0-	CH0 encoder phase Z input -
7	GND	Signal ground
8	DI0	CH0 digital signal input
9	DO0	CH0 digital signal output
10	A1+	CH1 encoder phase A input +
11	A1-	CH1 encoder phase A input -
12	B1+	CH1 encoder phase B input +
13	B1-	CH1 encoder phase B input -
14	Z1+	CH1 encoder phase Z input +
15	Z1-	CH1 encoder phase Z input -
16	GND	Signal ground
17	DI1	CH1 digital signal input
18	DO1	CH1 digital signal output

It is recommended to use cables with cores smaller than 1mm².

The cold-pressed terminal parameters are as follows:

4 Wiring

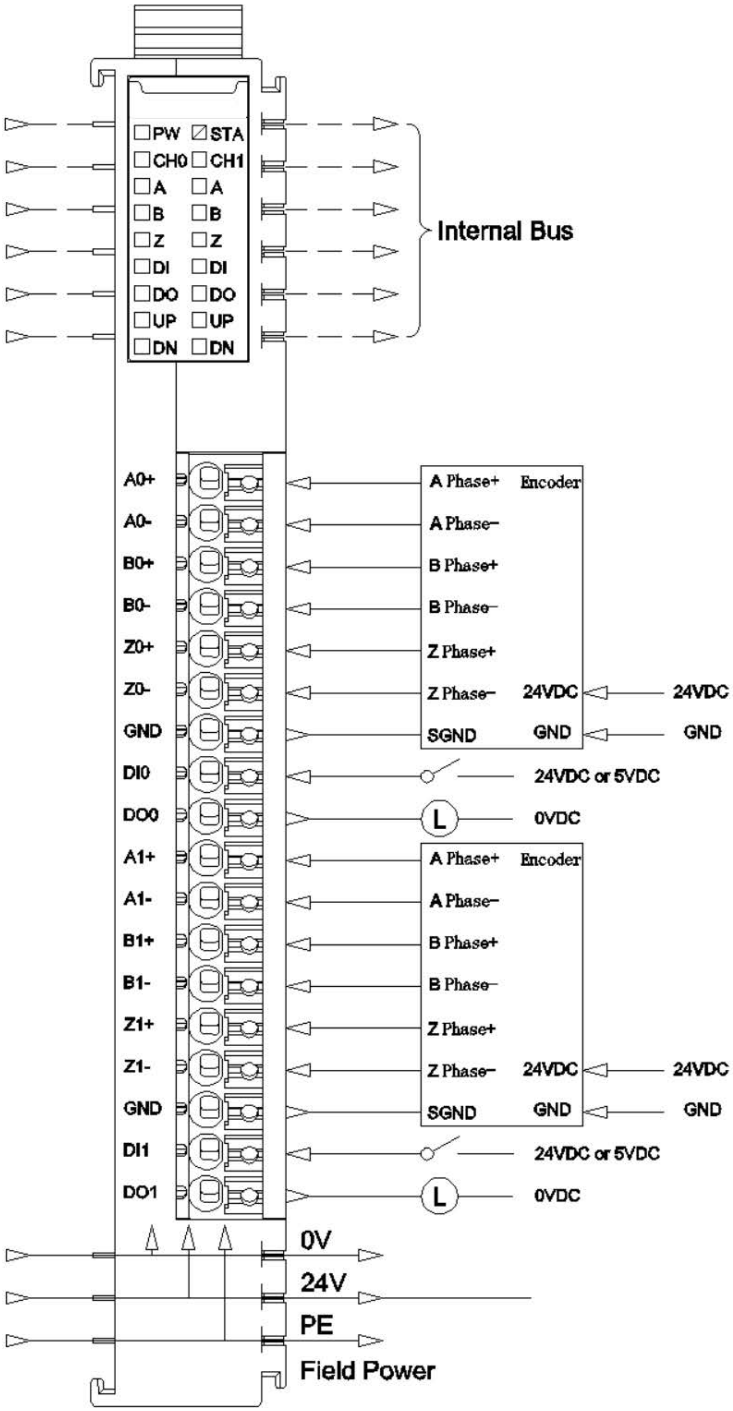
PW STA
CH0 CH1
A A
B B
Z Z
DI DI
DO DO
UP UP
DN DN
Internal Bus
A0+
A0-
B0+
B0-
Z0+
Z0-
GND
DI0
DO0
A1+
A1-
B1+
B1-
Z1+
Z1-
GND
DI1
DO1
A Phase+
Encoder
A Phase−
B Phase+
B Phase−
Z Phase+
Z Phase−
24VDC
SGND
GND
24VDC
GND
24VDC or 5VDC
L
0VDC
A Phase+
Encoder
A Phase−
B Phase+
B Phase−
Z Phase+
Z Phase−
24VDC
SGND
GND
24VDC
GND
24VDC or 5VDC
L
0VDC
0V
24V
PE
Field Power

5 Process data definition

< 2 Analog Input(Encoder) > Submodule process data definition

Input Data								
Bit No	Bit 7	Bit 6	Bit 5	Bit 4	Bit 3	Bit 2	Bit 1	Bit 0
Byte 0	Counter DOWN Ch#0	Counter UP Ch#0	Counter Underflow Ch#0	Counter Overflow Ch#0	DI Ch#0	Z Ch#0	B Ch#0	A Ch#0
Byte 1	Reserved							
Byte 2	Counter DOWN Ch#1	Counter UP Ch#1	Counter Underflow Ch#1	Counter Overflow Ch#1	DI Ch#1	Z Ch#1	B Ch#1	A Ch#1
Byte 3	Reserved							
Byte 4	Counter value Ch#0							
Byte 5								
Byte 6								
Byte 7								
Byte 8	Capture value Ch#0							
Byte 9								
Byte 10								
Byte 11								
Byte 12	Measurements 1 Ch#0							
Byte 13								
Byte 14								
Byte 15								
Byte 16	Measurements 2 Ch#0							
Byte 17								
Byte 18								
Byte 19								
Byte 20	Counter value Ch#1							
Byte 21								
Byte 22								
Byte 23								
Byte 24	Capture value Ch#1							
Byte 25								
Byte 26								
Byte 27								
Byte 28	Measurements 1 Ch#1							
Byte 29								
Byte 30								
Byte 31								
Byte 32	Measurements 2 Ch#1							
Byte 33								
Byte 34								
Byte 35								
Output Data								
Bit No	Bit 7	Bit 6	Bit 5	Bit 4	Bit 3	Bit 2	Bit 1	Bit 0

Byte 0	Reserved	Flow Clear Ch#0	Counter Set Trigger Ch#0	DO Ch#0
Byte 1	Reserved			
Byte 2	Reserved	Flow Clear Ch#1	Counter Set Trigger Ch#1	DO Ch#1
Byte 3	Reserved			
Byte 4	Set Value for Counter Ch#0			
Byte 5				
Byte 6				
Byte 7				
Byte 8	Set Value for Counter Ch#1			
Byte 9				
Byte 10				
Byte 11				

Data description：

Input data definition:

A/B/Z Ch#(0-1)： The position is 1 when the corresponding channel A/B/Z input signal is valid, and 0 when the input is invalid.

DI Ch#(0-1)： Digital input signal status.

Counter Overflow Ch#(0-1)： Counter overflowed flag bit.

Counter Underflow Ch#(0-1)： Counter underflows flag bit.

Counter UP： Encoder positive rotation, counter up counting sign.

Counter DOWN： Encoder contrarotation, counter down count flag.

Counter Value Ch#(0-1)： Pulse count value, 32 - bit signed integer, automatically clear after overflow.

Capture value Ch#(0-1)： Pulse capture value, 32-bit signed integer, and when DI is set to capture, the pulse count value will be captured to the capture value at the selected edge.

Measurements 1 Ch#(0-1)： Measurement value 1, the measurement value will be output according to the measurement value type selected by the user (view the configuration parameter section of the module for optional measurement value)

Measurements 2 Ch#(0-1)： Measurement value 2, the measurement value will be

output according to the measurement value type selected by the user (view the configuration parameter section of the module for optional measurement value)

Output data definition:

DO Ch#(0-1)： Digital output channel control.

Counter Set Trigger CH#(0-1)： Counter set trigger bit, rising edge trigger counter set, the output value **Set Value for Counter** will be updated to **Counter Value**, this function can be used to set the initial value of the counter.

Flow Clear CH#(0-1)： Overflow clear bit, the rising edge can clear the input **Counter Overflow** and **Counter Underflow** flag bits.

Set Value for Counter Ch#(0-1)： Counter set value.

6 Configuration parameters definition

<2 Analog Input(Encoder) > Submodule configuration parameter definition

Configuration Parameter								
Bit No	Bit 7	Bit 6	Bit 5	Bit 4	Bit 3	Bit 2	Bit 1	Bit 0
Byte 0	Reserved					16Bit Data Format	32Bit Data Format	
Byte 1	Reserved					Work Mode Ch#0		
Byte 2	Reserved						Frequency Multiplication Ch#0	
Byte 3	Reserved			Filtering Time Ch#0				
Byte 4	Reserved							Counter Storage Ch#0
Byte 5	Reserved							DI Function Selection Ch#0
Byte 6	Reserved						Capture Mode Ch#0	
Byte 7 … Byte 16	Reserved							
Byte 17	Reserved					Speed Measurement Time Ch#0		
Byte 18	Reserved		Measurements 2 Type Ch#0			Measurements 1 Type Ch#0		
Byte 19	Encoder Resolution Ch#0							
Byte 20								
Byte 21	Transmission Ratio Active Ch#0							
Byte 22								
Byte 23	Transmission Ratio Slave Ch#0							
Byte 24								
Byte 25 … Byte 32	Reserved							
Byte 33	Reserved					Work Mode Ch#1		
Byte 34	Reserved						Frequency Multiplication Ch#1	
Byte 35	Reserved			Filtering Time Ch#1				
Byte 36	Reserved							Counter Storage Ch#1
Byte 37	Reserved							DI Function Selection Ch#1

Byte 38	Reserved		Capture Mode Ch#1
Byte 39 … Byte 48	Reserved		
Byte 49	Reserved		Speed Measurement Time Ch#1
Byte 50	Reserved	Measurements 2 Type Ch#1	Measurements 1 Type Ch#1
Byte 51	Encoder Resolution Ch#1		
Byte 52			
Byte 53	Transmission Ratio Active Ch#1		
Byte 54			
Byte 55	Transmission Ratio Slave Ch#1		
Byte 56			
Byte 57 … Byte 64	Reserved		

Data description：

16Bit Data Format： Byte transfer order of channel state. (Default: 0)

0：A-B

1：B-A

32Bit Data Format： The byte transfer order of a channel count value. (Default: 0)

0：AB-CD

1：BA-DC

2：CD-AB

3：DC-BA

Work Mode Ch#(0-1)： Working mode of encoder. (Default: 0)

0：Incremental encoder mode.

1：Count direction mode.

2：Count up mode.

3：Count down mode.

Frequency Multiplication Ch#(0-1)： Frequency multiplication number (available only in incremental encoder mode), according to this mode it could output pulse count value. (Default: 2)

0：frequency multiplication 1

1：frequency multiplication 2

2：frequency multiplication 4

Filtering Time Ch#(0-1)： Encoder input filter time (default: 5)

0：no filter

1：0.1uS

…

5：0.5 uS

…

31：3.1 uS

Counter Storage Ch#(0-1)： Enable storage. When the storage function is enabled, the IO module will save the count value to the non-volatile memory in real time, and load the last saved count value at the next power-on. (Default: 1)

0：Disable

1：Enable

DI Function Selection Ch#(0-1)： DI function selection (Default: 0)

0：Normal DI function

1：Pulse capture function

Capture Mode Ch#(0-1)： Capture mode (default: 0)

0：Rising edge capture

1：Falling edge capture

2：Double edge capture

Speed Measurement Time Ch#(0-1)： Speed measurement period (Default: 6)

0：10mS

1：20mS

2：50mS

3：100mS

4：200mS

5：500mS

6：1000mS

7：2000mS

Measurements 1 Type Ch#(0-1)： Measurement value 1 Type selection (default: 0)

0：No measurements

1：Measuring speed (min/rotation)

2：Measuring frequency

Measurements 2 Type Ch#(0-1)： Measurement value 2 Type selection (default: 0)

0：No measurements

1：Measuring speed (min/ rotation)

2：Measuring frequency

Encoder Resolution Ch#(0-1)： Encoder resolution (default: 1)

Value range：1-65535

Transmission Ratio Active Ch#(0-1)： 1）Transmission ratio (main) (Default: 1)

Value range：1-65535

Transmission Ratio Slave Ch#(0-1)： Transmission ratio (main) (Default: 1)

Value range：1-65535

A Dimension drawing

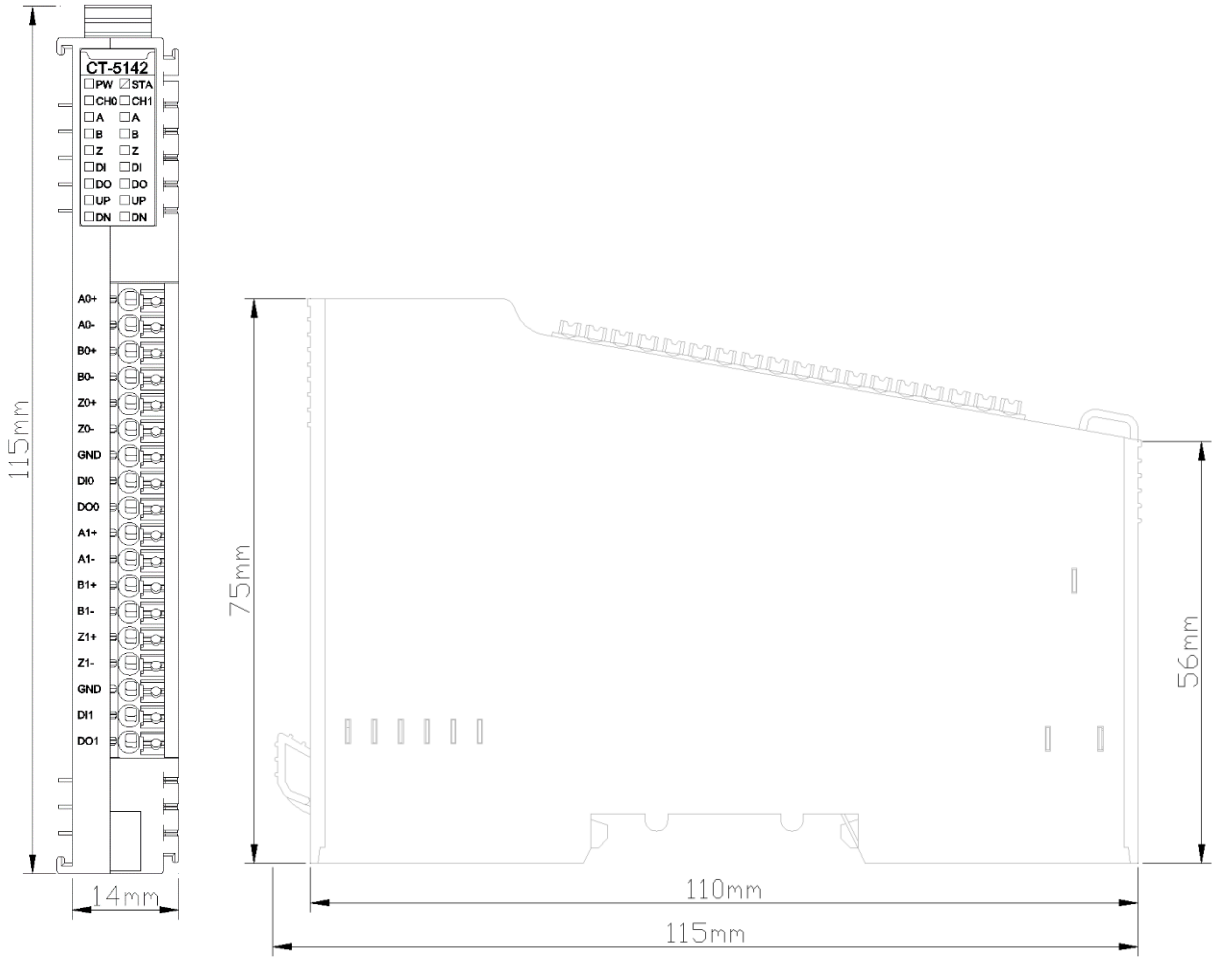

NT-5321 Modbus Serial Port Module

1 Module Description

The Modbus serial port module supports 1 channel RS485/RS232 /RS422 (optional), supports Modbus RTU/ASCII protocol, and supports master, slave and free transparent transmission mode.

The serial Module **NT-5321** could be applied with the I/O adapter modules, so it could convert Modbus into other protocols such as Modbus TCP, Profinet, EtherCAT, EtherNet/IP, etc. When the module is used, serial port parameters and Modbus instructions should be configured in IO Config software.

Devices with RS485/RS232/RS422 interface, which support Modbus-RTU /ASCII, could be applied with **NT-5321** to realize interconnection with upper PLC or upper computers. **NT-5321** could be applied with devices such as: PLC, DCS, remote IO, VFD, motor start protection device, intelligent high and low voltage electrical apparatus, power measurement device, intelligent field measurement equipment and instruments, etc.

2 Technical Parameters

General parameters	
Power	Max.500mA@5.0Vdc
Isolation	I/O to internal bus: opto-couple isolation (3KVrms)
Field Power	Nominal:24Vdc, Range:22-28Vdc
Wiring	I/O Wiring：Max.1.0mm² (AWG 17)
Mounting Type	35mmDIN-Rail
Size	115*14*75mm
Weight	65g
Environment Specification	
Operational Temperature	-40~85℃
Operational Humidity	5%~95% RH(No Condensation)
Ingress Protection Rating	IP20
Serial Port Parameters	
M/S/F:Channel Number	1Channel

M/S/F:Interface	RS485/RS232/RS422
M/S:Protocol	Modbus RTU/ASCII
M/S/F:Working Mode	Modbus Master, Slave, Transparent Transmission
M/S/F:Baud Rate	300bps-500Kbps
M/S/F:Data Bit	Bit 7, Bit 8
M/S/F:Parity Checking	None, Odd, Even
M/S/F:Stop Bit	Bit1, Bit2
M/S/F: Character Interval	1.5t-200t
F: Byte Order Conversion	Prohibit, Enable
M/F:Response Timeout	Customized，default：1000
M/F: Polling Timeout	Customized，default：100
M: Read Data Processing Mode	Hold the last input value, clear the input value
M: Data Output Mode	Polling, event triggering (data changes)
M: Module Control Enable	Prohibit, Enable
M: Module Control Mode	Level trigger (continuously valid), rising edge trigger (single valid)
M: Power on Event Output	Prohibit, Enable
S:Slave ID	Customized，default：1
S:Response Time	Customized，default：50

Note: M represents the valid parameters of master mode, S represents the valid parameters of slave mode, and F represents the valid parameters of free transparent transmission mode.

3 Hardware Interface

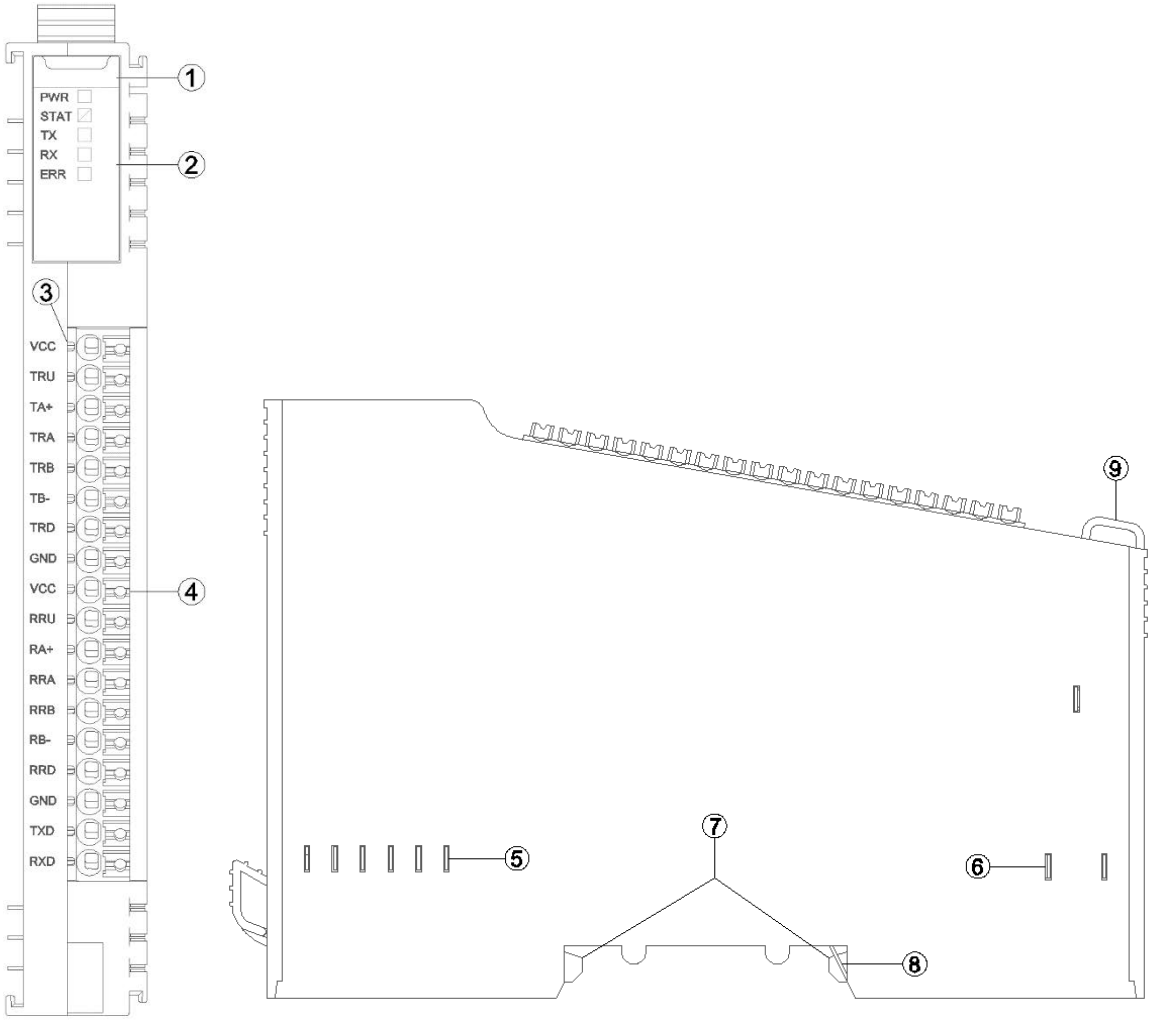

① Module Type

② State indicator

③ N/A

④ Wiring Terminal and identification

⑤ Internal Bus

⑥ Field Power

⑦ Buckle

⑧ Grounding Spring Sheet

⑨ Fixed Wiring Harness

3.1 Wiring Terminal

Terminal	RS485	RS422	RS232
VCC	4.7K Pull up resistance short connection	4.7K Pull up resistance short connection (TX)	
TRU			
TA+	A+	TX+	
TRA	120R Terminal resistance short connection	120R Terminal resistance short connection (TX)	
TRB			
TB-	B-	TX-	
TRD	4.7KPull down resistance short connection	4.7K Pull down resistance short connection (TX)	
GND			
VCC		4.7K Pull up resistance short connection (RX)	
RRU			
RA+		RX+	
RRA		120R Terminal resistance short connection (RX)	
RRB			
RB-		RX-	
RRD		4.7K Pull down resistance short connection (RX)	
GND	GND		GND
TXD			TXD
RXD			RXD

It is recommended to use cables with cores smaller than 1mm².

The cold-pressed terminal parameters are as follows:

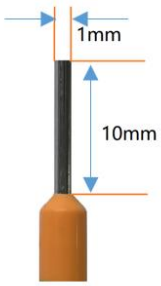

3.2 LED Indicator State

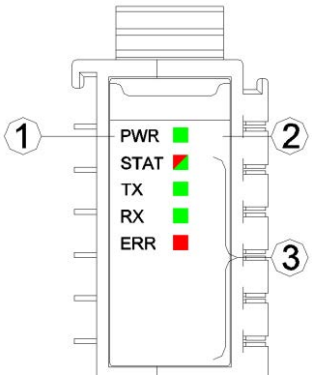

PW power indicator(Green)	Definition
ON	The system power supply is normal.
OFF	The system power supply is failure.
STAT Module State Indicator(Red/Green)	Definition
Double Flash (RED)	Module Exception has been soft-restarted
ON (GREEN)	Operational Mode
Green Single Flash	Stop mode
Flash(2.5Hz) (RED/GREEN)	Upgrading mode
Flash(10Hz) (RED/GREEN)	Firmware Update
TX Serial Port Sending Indicator	Definition
OFF	No data sending
Flash	Serial port data sending
RX Serial Port receiving Indicator	Definition
OFF	No data receiving
Flash	Serial port data receiving
ERR Running Indicator	Definition
OFF	Configuration normal, communication normal
Single Flash	Communication abnormal
Cycle Flash	Configuration error

4 Wiring

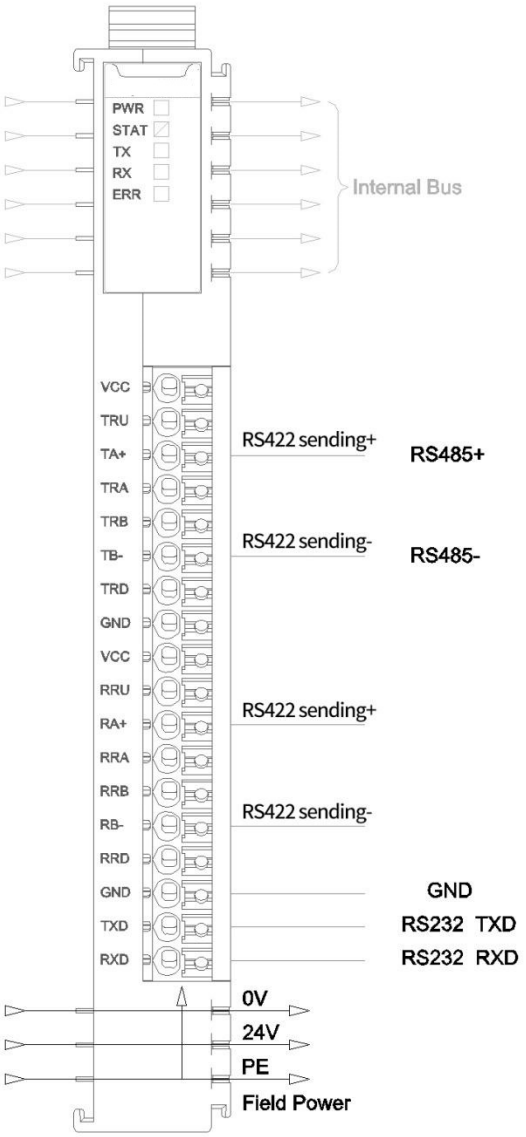
PWR
STAT
TX
RX
ERR
Internal Bus
VCC
TRU
TA+
TRA
TRB
TB-
TRD
GND
VCC
RRU
RA+
RRA
RRB
RB-
RRD
GND
TXD
RXD
RS422 sending+
RS485+
RS422 sending-
RS485-
RS422 sending+
RS422 sending-
GND
RS232 TXD
RS232 RXD
0V
24V
PE
Field Power

5 Process data definition

5.1 Module process data definition

NT-5321, the module itself has no input or output process data.

5.2 Submodule process data mapping

The network adapter reads and writes the input and output process data of the sub-module of NT-5321 in real time through the internal bus.Its data mapping model is shown as the figure below:

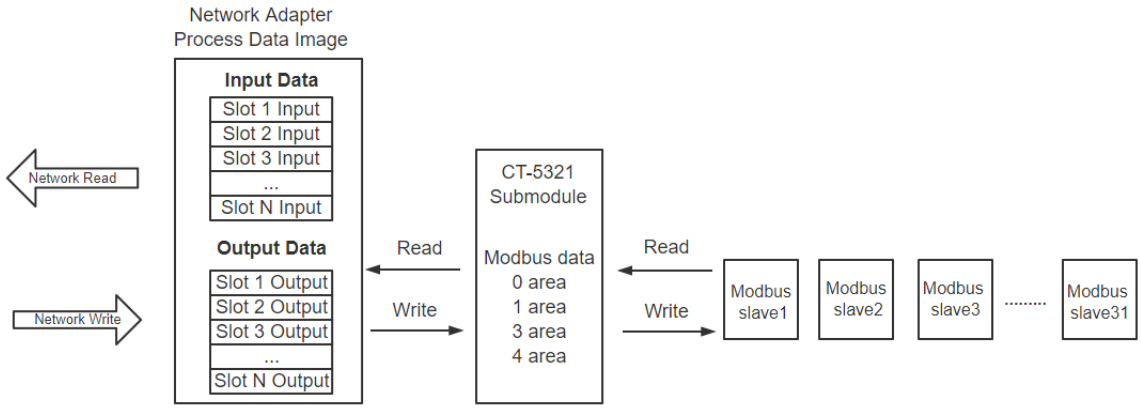

6 Configuration parameters definition

6.1 NT-5321 Configuration parameter definition

Configuration Parameter								
Bit No	Bit 7	Bit 6	Bit 5	Bit 4	Bit 3	Bit 2	Bit 1	Bit 0
Byte 0						BaudRate Select	Gateway Mode	
Byte 1	Standard BaudRate							
Byte 2								
Byte 3								
Byte 4								
Byte 5	Custom BaudRate							
Byte 6								
Byte 7								
Byte 8								
Byte 9		Byte Swap	Serial Mode	Stop Bits		Parity Bits		Data Bits
Byte 10	Char Pitch							
Byte 11	Response Timeout(ms)							
Byte 12								
Byte 13	Delay Between Polls(ms)							
Byte 14								
Byte 15				First Output on Power-Up	Module Control Mode	Module Control Enable	Output Mode	Fault Action for Read Command
Byte 16	Slave ID							
Byte 17	Response Delay(ms)							
Byte 18								

M/S/F：Gateway Mode : Module working mode（default：Modbus Master）

0：Modbus Master

1：Modbus Slave

2：Free port communication mode

M/S/F：Baudrate Selection（default：standard baud rate）

0：Standard baud rate

1：Customized baud rate

M/S/F：Standard BaudRate（default：9600bps）

0：300bps

1：600bps

2：1200bps

3：2400bps

4：4800bps

5：9600bps

6：14400bps

7：19200bps

8：38400bps

9：57600bps

10：115200bps

11：128000bps

12：230400bps

13：256000bps

14：384000bps

15：500000bps

M/S/F：Custom BaudRate: 300-500000bps could be set，default: 9600 Note: The devices of a few customers are with non-standard Baud rate, and it could be customized.

M/S/F：Data Bits(default：Bit 8)

0：Bit 7

1：Bit 8

M/S/F：Parity Bits(default：None)

0：None

1：Odd

2：Even

M/S/F：Stop Bits(default：Bit 1)

0：Bit 1

1：Bit 2

M/S: Serial Mode (default：RTU)

0：RTU

1：ASCll

F:Btye Swap (default：disabled)

0：Disabled

1：Enable

M/S/F: Char Pitch： Frame interval detection time when receiving a message (T is the transmission time of a single character and is related to the baud rate）. (default：5 CH)

0：1.5 CH

1：3.5 CH

2：5 CH

3：10 CH

4：20 CH

5：50 CH

6：100 CH

7：200 CH

M/F: Response Timeout (ms): The time that the master sends a command and waits for a response from the slave.1~65535 could be set, the default is 1000.

M/F: Delay Between Polls (ms): The interval time between Modbus commands (the delay between receiving the slave response message and sending the next command), 0~65535 could be set, default 100.

M: Fault Action for Read Command: The way the data is processed after the timeout of the slave read data. (Default: Hold last input value)

0: Hold the last input value

1: Clearing input value optional

M: Output Mode: The Modbus periodically sending write messages under "polling mode". In "event triggered" mode, write commands are sent only when the

Modbus output data changes.(Default: polling)

0: polling

1: Event triggers (data changes)

M: Module Control Enable: When it is necessary to control the read and write commands of Modbus, it could select enabling mode and control the read and write commands of Modbus by controlling the value of "module control output". (Default: disabled)

0: disabled

1: enable

M: Module Control Mode. This value is valid only in module control enabled mode. (Default: Level triggered)

0: Level trigger (effective continuously)

1: Rising edge trigger (single trigger)

M: First Output on Power-on. (Default: enabled)

0: disabled

1: enable

S: Slave ID: 1-247 could be set. This parameter is only valid in slave mode.

S: Respond Delay (MS): 0~65535 is optional, default 50.

6.2 NT-5321 Parameter definitions for submodules

6.2.1 Submodules in master mode

M: Diagnostic module

M: Reading coil (0xxxx), it supports 8~128bits optionally

M: Reading discrete input (1xxxx), it supports 8~128bits optionally

M: Reading input register (3xxxx), it supports 1~16words optionally

M: Reading hold register (4xxxx), it supports 1~16words optionally

M: Writing coil (0 xxxx), it supports single coil and 8~128bits optionally

M: Writing hold register (4xxxx), it supports single register and 1~16words optionally

M: Diagnostic module, it includes module status input, module error code input, module control output, and polling time input.The drop-down menu commands need to be added to the first 8 lines of the slot.

1. Module state input: there are 8~48 channels available. The module state could monitor the working state of each data slot. When a data slot fails, the corresponding state bit will be set to 1, and it would be reset automatically after failure recovery.

2. Mod e error code input: there are 8~48 channels available. When the data slot fails, the error code module could display the function code of the error channel and the detailed error code. According to the error code, the user can judge the cause of the fault, and then take the corresponding adjustment method.See "Modbus Error Code Table" for a detailed description.

3. Mod e control output: there are 8~48 channels available. The read/write channel for output control of the command is valid when the parameter (**M: module** control) under the serial port is in enabled mode.

4. olling time input: Polling time is used for monitoring serial ports.

6.2.2 Submodules in slave mode

S: Diagnostic module

S: Reading coil (0xxxx)，it supports 1~1024Bytes optionally

S: Reading hold register (4xxxx), it supports 1~512words optionally

S: Writing coil (0xxxx), it supports 1~1024Bytes optionally

S: Writing discrete input (1xxxx), it supports 8~1024Bytes optionally

S: Writing input register (3xxxx), it supports 1~512words optionally

S: Writing hold register (4xxxx), it supports 1~512words optionally

S :Diagnostic module

The module could monitor the communication failure by entering the state in slave. Please see the following table to check the failure.

Modbus Error code table

Error Code	Fault description	Troubleshooting method
0x00	Working properly	N/A
0x01	Illegal function code	The device does not support the current function code, please refer to the slave manual to select the corresponding function code module
0x02	Illegal data address	If the device data exceeds its address range, refer to the slave manual to modify the data starting address or data length
0x03	Illegal data value	Data length error, data length beyond the Max. allowed value 125(Word) or 2000(Bit), modify the length
0x04	Data processing error	Check that if the range of data values meets the slave requirements
0x05	Application layer length mismatch	Increase the receive character pitch and check the communication parameter Settings
0x06	Protocol ID error	Check the sending end message
0x07	Cache address error	Device internal error

0x08	Bit offset error	Device internal error
0x09	The slave ID number does not match	Increase timeout time, check hardware connection state, and check communication parameter Settings
0x0A	CRC Error	CRC error, check communication line
0x0B	LRC Error	LRC error, check communication line
0x0C	Answer function codes do not match	Check the hardware connection state
0x0D	Answer addresses do not match	Check the hardware connection state
0x0E	The length of the reply data does not match	Check the hardware connection state
0x0F	Communication timeout	Increase timeout time, check hardware connection state, and check communication parameter Settings
0x10	ASCII mode starting character Error	':' Colon starting character Error
0x11	ASCII mode terminator character Error	CR/LF Carriage return terminator character Error
0x12	ASCII mode non-character data	The data contains non-hexadecimal ASCII codes
0x13	ASCII mode character error	Slave answering length error

6.2.3 Submodule in free transparent transmission mode

F : Control and state modules

F : Input and output data modules all support 1~512words optionally

Definition of process data for control and state modules

IO module data direction	Data Name	Variable Name	Data Type	Byte Offset
Input Data	Output control word – Feedback	Control_Word_Feedback	uint16_t	0
	Send frame byte length- feedback	Send_Data_Len_Feedback	uint16_t	2
	Serial State	COM_Status	uint16_t	4
	Received Error frame count	Error_Counter	uint16_t	6
	Total received data frame count	Received_Counter	uint16_t	8
	The current received frame byte length	Received_Data_Len	uint16_t	10
Output Data	Output control word	Control_Word	uint16_t	0
	Send frame byte length	Send_Data_Len	uint16_t	2

Variable Definition：

Variable Name	Bit 15-7	Bit 6	Bit 5	Bit 4	Bit 3	Bit 2	Bit 1	Bit 0
Control_Word_Feedback	Reseverd	Input Data Reset	Received Reset	Error Reset	Timeout Reset	Parity Reset	Done Reset	Trigger
Send_Data_Len_Feddback	Send Data Len							
COM_Status	Reseverd				Timeout Error	Parity Error	Done	Busy
Error_Counter	Error Counter							
Received_Counter	Received Counter							
Received_Data_Len	Received Data Len							
Control_Word	Reseverd	Input Data Reset	Received Reset	Error Reset	Timeout Reset	Parity Reset	Done Reset	Trigger
Send_Data_Len	Send Data Len							

Input data description:

1.Control_Word_Feedback is the feedback value of Control_Word, which will be updated to the control word feedback after the output control word is refresh to the module

2.Send_Data_Len_Feedback is the feedback value of Send_Data_Len. After the length of sending frame bytes is refreshed to the module, it will be updated to the length feedback of sending frame bytes.

3.In the response mode, when the serial ports are sending data, the Busy bit is set to 1.

3.1 When the serial port receives the reply within the timeout period, the Busy bit will be reset, and Done will be completed at position 1 and Received_Counter will calculate the value plus 1. If there is a parity error in the received frame, and Parity_Error will be set to 1, while Error_Counter will count plus 1. Received_Data_Len holds the number of bytes of the currently received frame.

3.2 When the serial port does not receive a reply within the timeout period, the Busy bit will be reset, and the Done will be completed at position 1. At the same time, Timeout_Error will be set as 1, and the Error_Counter will be added as 1, so the Received_Data_Len value will be reset.

4. In the active report mode, when slave received the data packet, and the Received_Counter will count as a value plus 1. If there is a parity error in the received frame, the Parity_Error bit will be set to 1, while the Error_Counter will count plus 1.

Description of output data :

1.When Received_Counter_Reset is in rise edge, the Received_Counter value will be reset.

When Error_Counter_Reset is in rise edge, Error_Counter value will be reset.

When Timeout_Error_Reset s in rise edge, Timeout_Error will be reset.

When Parity_Error_Reset is in rise edge, Parity_Error will be reset.

When Done_Reset is in rise edge, Done will be reset.

2. In the active report mode, the Trigger bit is invalid and the Send_Data_Len is invalid.

3. In master-slave response mode, when Trigger is in rise edge, and it will Trigger serial port to send data for one time, and the serial port will send data packets according to the data length of Send_Data_Len and wait for the replying processing.

A Dimension drawing

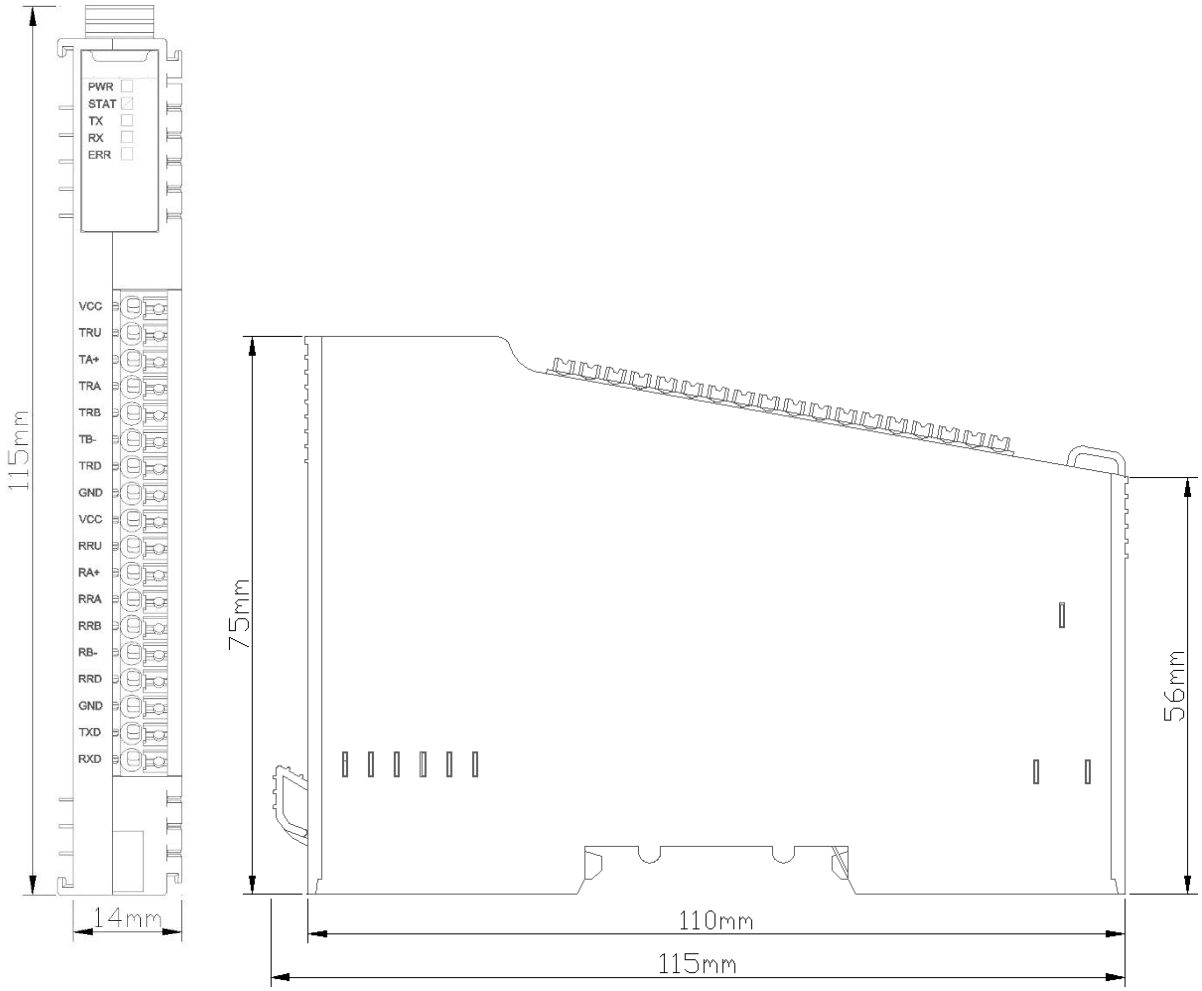

NT-5331 CANopen Master station module

1 Module Description

The CANopen master module supports 1 x CAN interface, supports the CANopen master working mode.

The NT-5331 could be applied with the I/O adapter modules, so it could convert CANopen into other protocols, such as Modbus-TCP, Profinet, EtherCAT, Ethernet/IP, etc. When the module is used, input and output commands need to be configured in the IO Config software through the Type-C interface of the module.

All slave devices that support the CANopen protocol can use this module to interconnect with the upper PLC or the upper computer. Such as: CANopen remote IO station, CANopen various sensors, CANopen drivers and so on.

2 Technical Parameters

General parameters	
Power	Max.50mA@5.0Vdc
Isolation	I/O to internal bus: opto-couple isolation (3KVrms)
Field Power	Nominal voltage：24Vdc Input range：22~28Vdc
Wiring	I/O wiring：Max.1.0mm² (AWG 17)
Mounting Type	35mm Din-Rail
Size	115*14*75mm
Weight	65g
Environment Specification	
Operational Temperature	-40~85℃
Operational Humidity	5%-95% (No Condensation)
Ingress Protection Rating	IP20
CAN parameters	
M/S Channel	1channel
M/S Interface	CAN
M/S Protocol	CANopen Conform DS301 V4.02
M/S Working mode	CANopen Master
M/S station	16 Slave station
M/S Baud rate	10K~1Mbps
S	PDO, SDO, Heartbeat, NMT, EMCY and Network Scan
S	Automatically assign PDO serial number, Default: disabled
S	Automatically assign PDO COB-ID，Default: disabled
S	Reset function to restore factory Setting

3 Hardware Interface

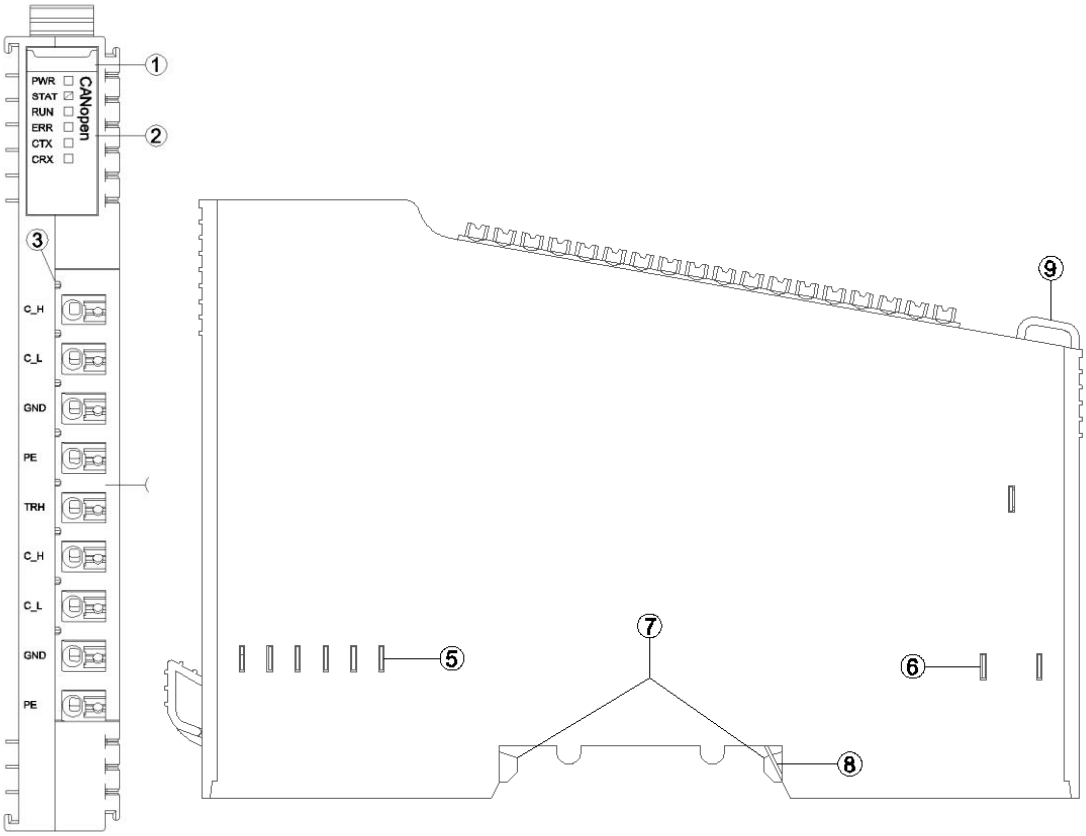

① Module Type

② State indicator

③ N/A

④ Wiring Terminal and identification

⑤ Internal Bus

⑥ Field Power

⑦ Buckle

⑧ Grounding Spring Sheet Fixed Wiring Harness

⑨ Fixed Wiring Harness

3. 1 Wiring Terminal

Terminal	Location at Head, tail of the CAN bus	Location at middle of the CAN bus
C_H	CAN_H signal wire	CAN_H signal wire
C_L	CAN_L signal wire	CAN_L signal wire
GND	CAN signal earth	CAN signal earth
PE	Ground terminal	Ground terminal
TRH	Built-in terminal resistance	
C_H		CAN_H signal wire
C_L	N/A	CAN_L signal wire
GND		CAN signal earth
PE		Ground terminal

It is recommended to use cables with cores greater than 0.2mm² and smaller than 1mm².

When connecting cables (terminals)with cores, need to check and connect them according to the corresponding node serial number.

The cold-pressed terminal parameters are as follows:

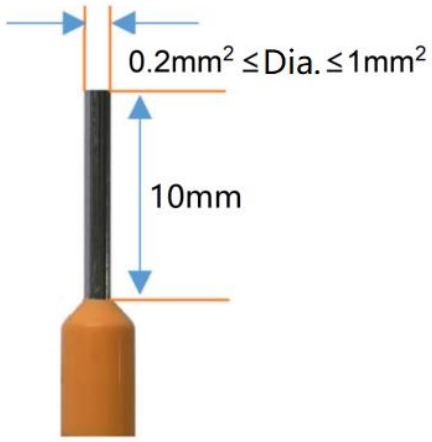

3.2 LED indicator definition

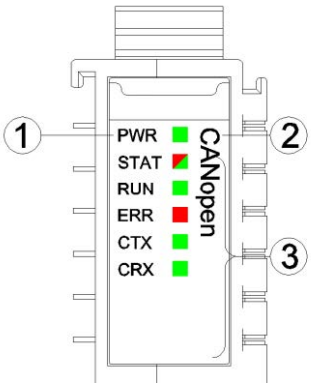

PWR power indicator (Green)	Definition
ON	The system power supply is normal.
OFF	The system power supply is failure.
STAT- Module State Indicator (Red/Green)	Definition
Double Flash (RED)	Module Exception has been soft-restarted
ON (GREEN)	Operational Mode
Green Single Flash	Stop mode
Flash(2.5Hz) (RED/GREEN)	Upgrading mode
Flash(10Hz) (RED/GREEN)	Firmware Update
RUN -Running status indicator (Green)	Definition
Flash(2Hz)	Pre-Operational status
Single flash	Stopped status
Steady on	operation status
ERR Error status indicator (red)	Definition
Single flash	CAN error frame reaches warning value
Double flash	Error control event
Steady on	Bus Off
OFF	Bus in normal
CTX CAN Sending indicator (Green)	Definition
Flash	CAN is sending data
OFF	CAN not sending data
CRX CAN Receiving indicator（Green）	Definition
Flash	CAN is receiving data
OFF	CAN not receiving data

4 Wiring

NT-5331 set location at Head, tail of the CAN bus

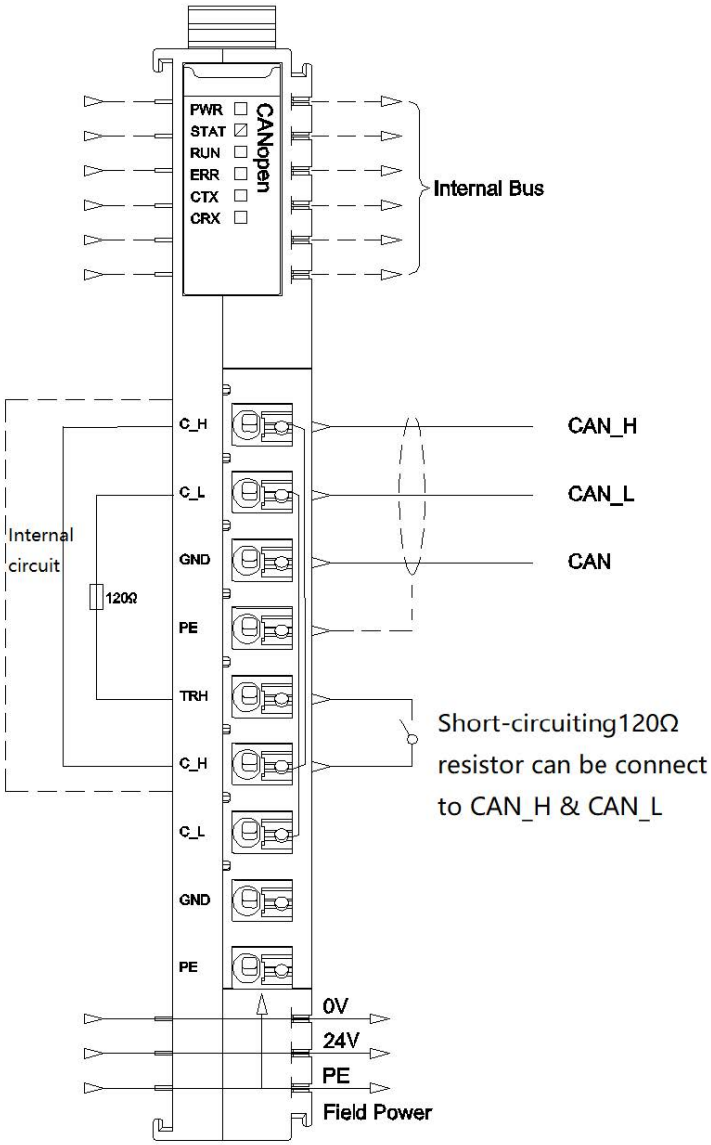

NT-5331 set location at middle of the CAN bus

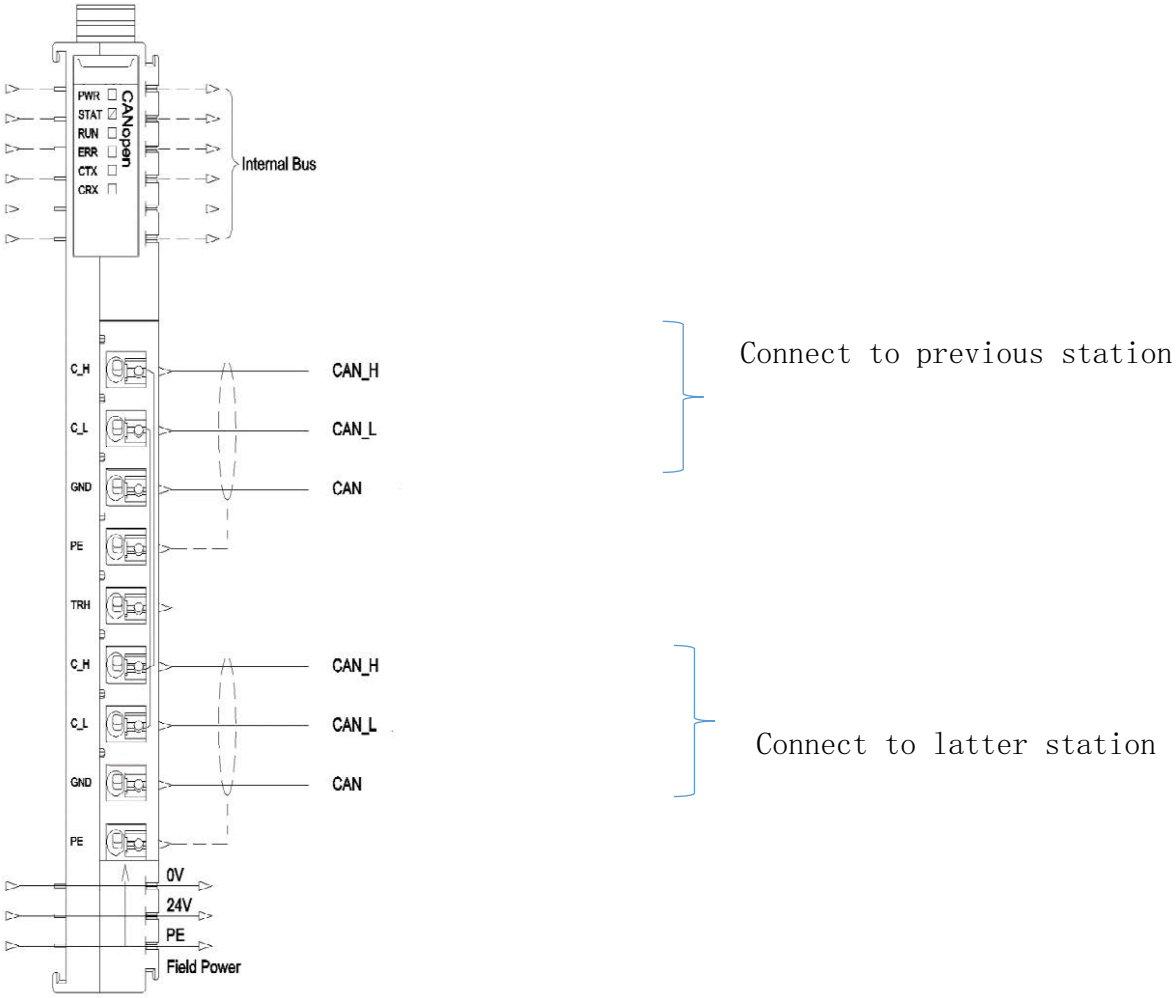

5 Process data definition

5.1 Module process data definition

NT-5331, the module itself has no input or output process data.

5.2 Submodule process data mapping

The network adapter reads and writes the input and output process data of the sub-module of NT-5331 in real time through the internal bus.

6 Configuration parameters definition

6.1 NT-5331 Configuration parameter definition

Configuration parameter								
Bit No	Bit 7	Bit 6	Bit 5	Bit 4	Bit 3	Bit 2	Bit 1	Bit 0
BYTE0					Auto COB-ID	Auto PDO Number	Auto Start	CAN Mode
BYTE1	Manager Node ID							
BYTE2					CAN Baud Rate			
BYTE3								SYNC ENABLE
BYTE4	SYNC COBID							
BYTE5								
BYTE6	SYNC Cycle							
BYTE7								
BYTE8								
BYTE9								
BYTE10	SYNC Window Length							
BYTE11								
BYTE12								
BYTE13								
BYTE14	Heartbeat time							
BYTE15								
BYTE16	Consumer/Producer Heartbeat Ratio							
BYTE17								
BYTE18								
BYTE19								
BYTE20	SDO timeout							
BYTE21								

Working Mode：Module working mode（ Default：CANopen Host/Master）

Auto Start：(Default : enable)

Auto Generate PDO Nunber：Automatically assign PDO serial number,

Enable or Disable are optional. (Default: enable)

Auto Generate PDO COB-ID：Automatically assign PDO COB-ID，Enable or Disable are optional .(Default: enable)

Manager Node-ID：Manager node address（Default：127）

CAN BaudRate：CAN Baud Rate（Default：125KBit/sec）

0：1MBit/sec

1：800 KBit/sec

2：500 KBit/sec

3：250 KBit/sec

4：125 KBit/sec

5：100 KBit/sec

6：50 KBit/sec

7：20 KBit/sec

8：10 KBit/sec

SYNC Enable：（ Default：disable）

0：Disable

1：Enable

SYNC COB-ID：sync identifier（Default：0x0800）

Communication Cycle Period（us） : 32-bit unsigned value can be set up.

（ Default ：0）

Synchronnous Windows Length(us)：32-bit unsigned value can be set up

(Default : 0 ）

Manager Producer Heartbeat time(ms)：0~65535 can be set up.（Default：1000）

Consumer/Producer Heartbeat Ratio： 1.5~10 can be set up（Default : 1.5）

SDO Response Timeout (ms)：the master station waits for the slave station to respond after sending commands : 100~2000 can be set up（Default : 500）

6.2 NT-5331 Parameter definitions for submodules

6.2.1 CANopen Slave station

The NT-5331 module supports mounting of 16 CANOPEN slave devices, each with 4 RPdos and 4 TPdos by default.

6.2.1.1 CANopen Slave station configure parameters

Configure Parameters								
Bit No	Bit 7	Bit 6	Bit 5	Bit 4	Bit 3	Bit 2	Bit 1	Bit 0
BYTE0	CAN Node ID							
BYTE1						State Machine Check	Auto Star	Error Control Protocol
BYTE2	Producer Heartbeat Time(ms)							
BYTE3								
BYTE4	Consumer Heartbeat Time Node ID							
BYTE5	Consumer/Producer Heartbeat Ratio							
BYTE6								
BYTE7								
BYTE8								
BYTE9	Guard Time(ms)							
BYTE10								
BYTE11	Life Time Factor							

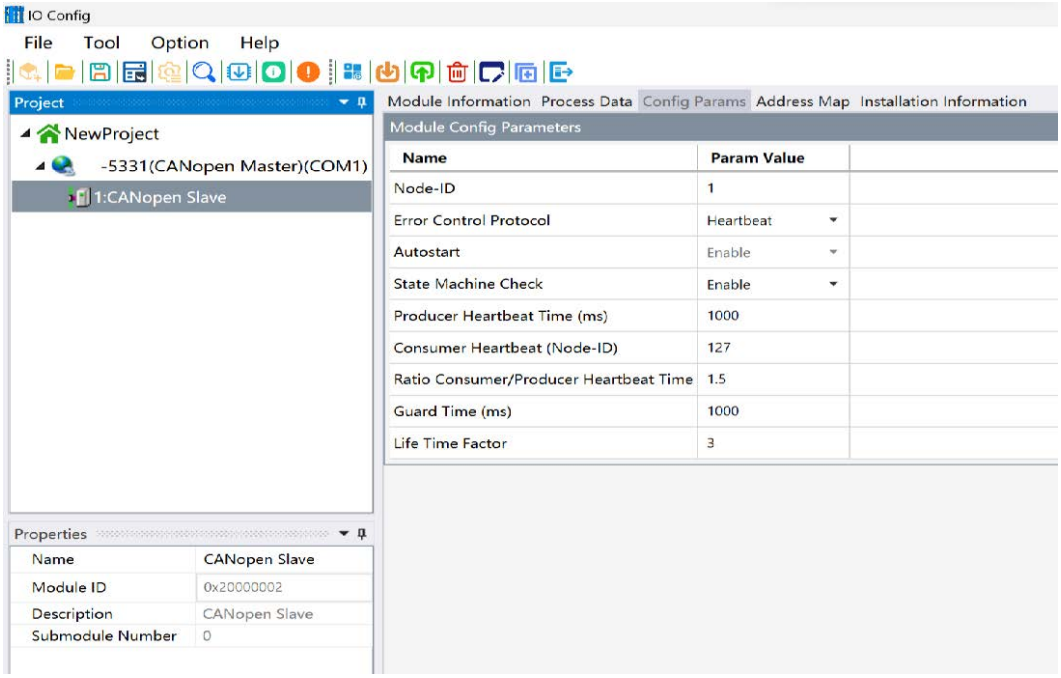

CAN Node ID: Can be set 1-127，Default :1

Error Control Protocol：Error control protocol, Heartbeat packet and node protection are optional，Default : Heartbeat

Auto Star ：Automatically，Default: enable

State Machine Check：State machine check: Enable or disable (optional)，Default: enable

Producer Heartbeat Time：Producer Heartbeat Time (ms),16 bits unsigned type, Default:1000

Consumer Heartbeat Time Node ID：can be set 0-127，Default :127

Consumer/Producer Heartbeat Ratio：Consumer/Producer Heartbeat Ratio,can be set 1.5-10 ，Default :1.5

Guard Time：guard Time (ms), 6 bits unsigned type，Default :1000

Life Time Factor：Life Time ,8 bits unsigned type，Default : 3

6.2.1.2 CANopen Sub-module

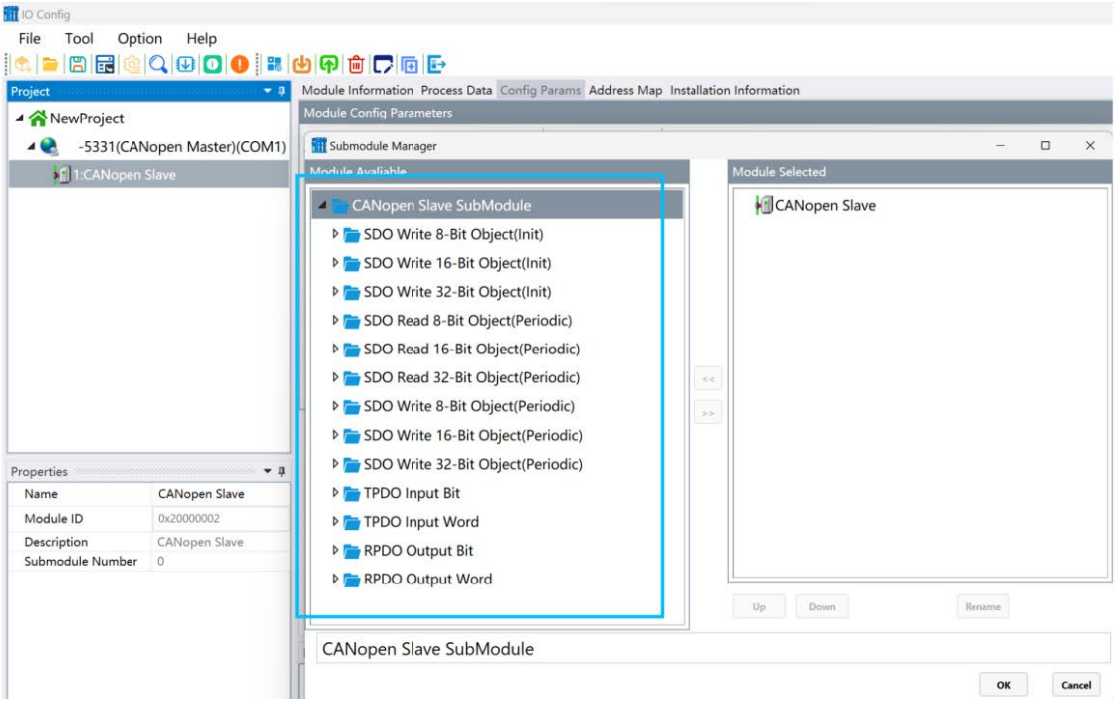

Contains：

SDO Write 8bit Object（Init）：include Write 1~8 8bit Objects

SDO Write16bit Object（Init）：include Write 1~8 16bit Objects

SDO Write 32bit Object（Init ）：include Write 1~8 32bit Objects

SDO Read 8bit Object（ Read Periodic）：include Read 1~8 8bit Objects

SDO Read 16bit Object（Read Periodic）：include Read 1~8 16bit Objects

SDO Read 32bit Object（Read Periodic）: include Read 1~8 32bit Objects

SDO Write 8bit Object（Write Periodic）: include Write 1~8 8bit Objects

SDO Write 16bit Object（Write Periodic）: include Write 1~8 16bit Objects

SDO Write 32bit Object（Write Periodic）: include Write 1~8 32bit Objects

TPDO data input（Bit variable）: include TPDO input 1~8 byte（bit ）

TPDO data input（Word variable）: include TPDO input 1~8 byte（word）

TPDO data output（Bit variable）: include RPDO data input 1~8 byte（bit）

TPDO data output（Word variable）: include RPDO data input 1~8 byte（word）

1. **SDO Init Write**

The instruction configuration parameters include the object identifier (index + subindex + data length) and the initial value of the object.

Object Identifier：object identifier (index + subindex + data length)

Object Initial Value：Initial Value

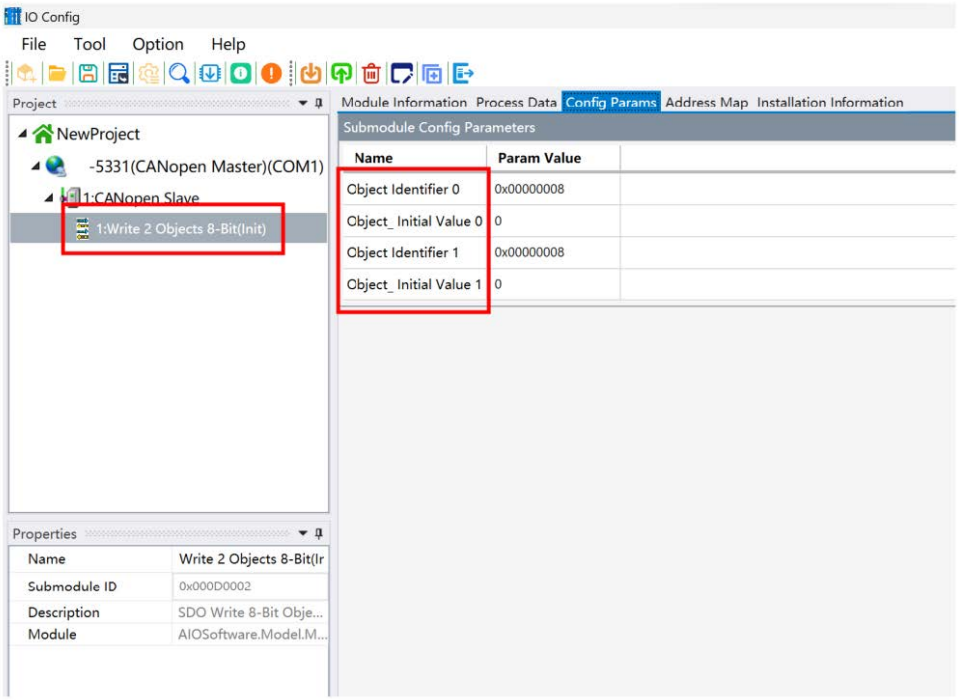

2. SDO Read Periodic、Write Periodic The instruction configuration parameters includes：Scan speed, object identifier (index + subindex + data length).

Scan Rate(ms) ：Scan speed，Default :1000ms

Object Identifier：object identifier, (index + subindex + data length).

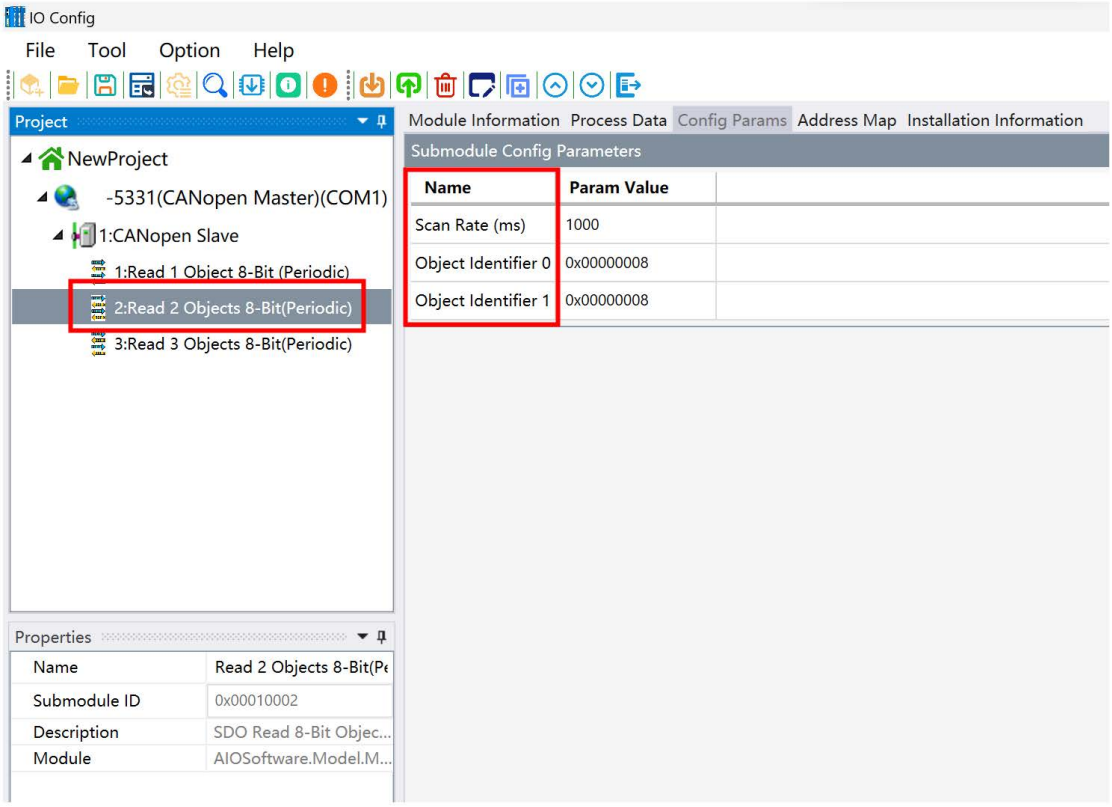
IO Config
File
Tool
Option
Help
Project
NewProject
-5331(CANopen Master)(COM1)
1:CANopen Slave
1:Read 1 Object 8-Bit (Periodic)
2:Read 2 Objects 8-Bit(Periodic)
3:Read 3 Objects 8-Bit(Periodic)
Module Information
Process Data
Config Params
Address Map
Installation Information
Submodule Config Parameters
Name
Param Value
Scan Rate (ms)
1000
Object Identifier 0
0x00000008
Object Identifier 1
0x00000008
Properties
Name
Read 2 Objects 8-Bit(Pe
Submodule ID
0x00010002
Description
SDO Read 8-Bit Objec...
Module
AIOSoftware.Model.M...

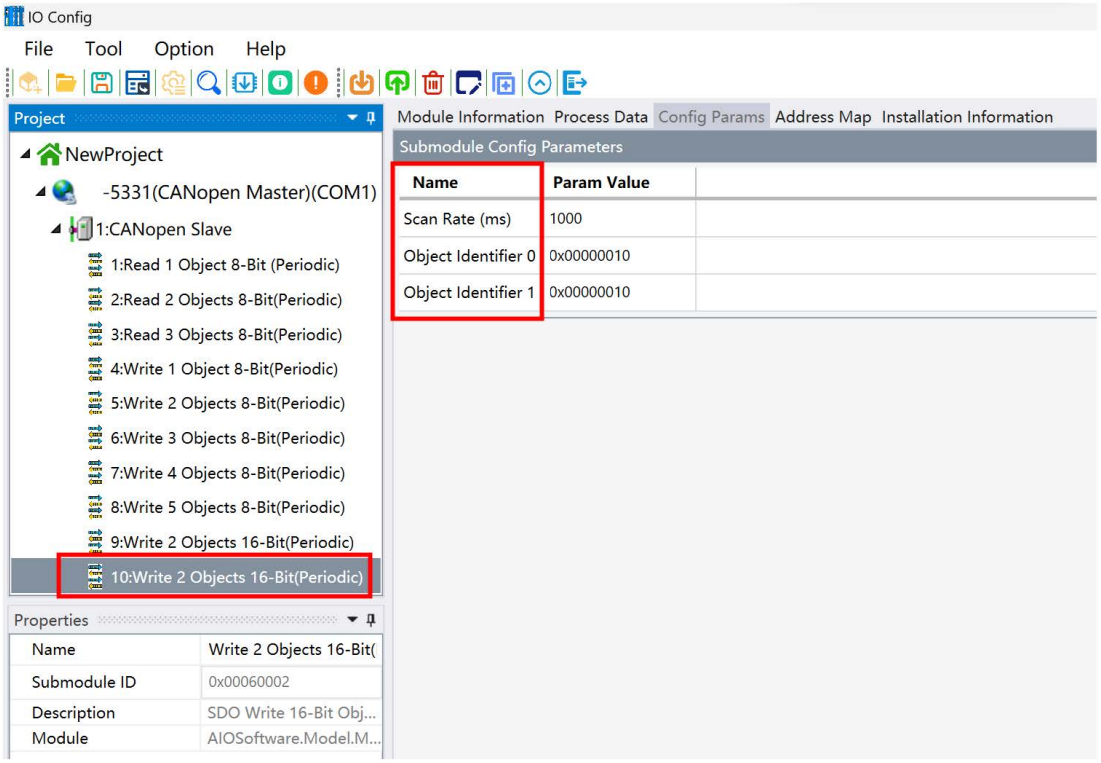
IO Config
File
Tool
Option
Help
Project
NewProject
-5331(CANopen Master)(COM1)
1:CANopen Slave
1:Read 1 Object 8-Bit (Periodic)
2:Read 2 Objects 8-Bit(Periodic)
3:Read 3 Objects 8-Bit(Periodic)
4:Write 1 Object 8-Bit(Periodic)
5:Write 2 Objects 8-Bit(Periodic)
6:Write 3 Objects 8-Bit(Periodic)
7:Write 4 Objects 8-Bit(Periodic)
8:Write 5 Objects 8-Bit(Periodic)
9:Write 2 Objects 16-Bit(Periodic)
10:Write 2 Objects 16-Bit(Periodic)
Module Information
Process Data
Config Params
Address Map
Installation Information
Submodule Config Parameters
Name
Param Value
Scan Rate (ms)
1000
Object Identifier 0
0x00000010
Object Identifier 1
0x00000010
Properties
Name
Write 2 Objects 16-Bit(
Submodule ID
0x00060002
Description
SDO Write 16-Bit Obj...
Module
AIOSoftware.Model.M...

3. TPDO data input Configuration parameters

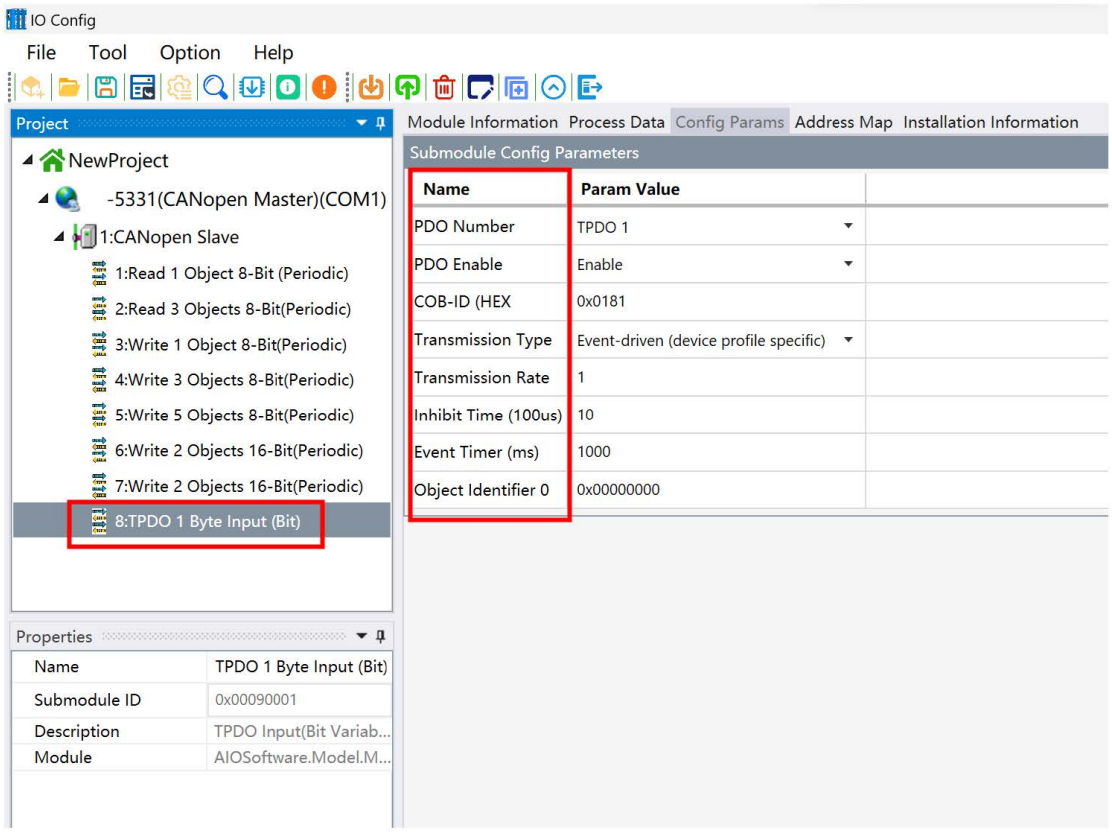

TPDO Number：TPDO1、TPDO2、TPDO3……TPDO64

PDO Enable：Enable or disable (optional)，Default: enable

COB-ID(HEX)：16#0x180+Node_ID

Transmission Type：Synchronous (acyclic) 、Synchronous (cyclic) Event-driven(manufacture specific)、Event-driven(device profile specific) can optional , Default: Event-driven (device profile specific)

Transmission Rate：8bit unsigned type，Default：1

Inhibit Time(100us)：inhibit time（100us）, 16bit unsigned type，Default：10

Event Timer：event timer (ms)，16 bits unsigned type，Default：1000

Object Identifier：object identifier, (index + subindex + data length).

4. RPDO data output Configuration parameters

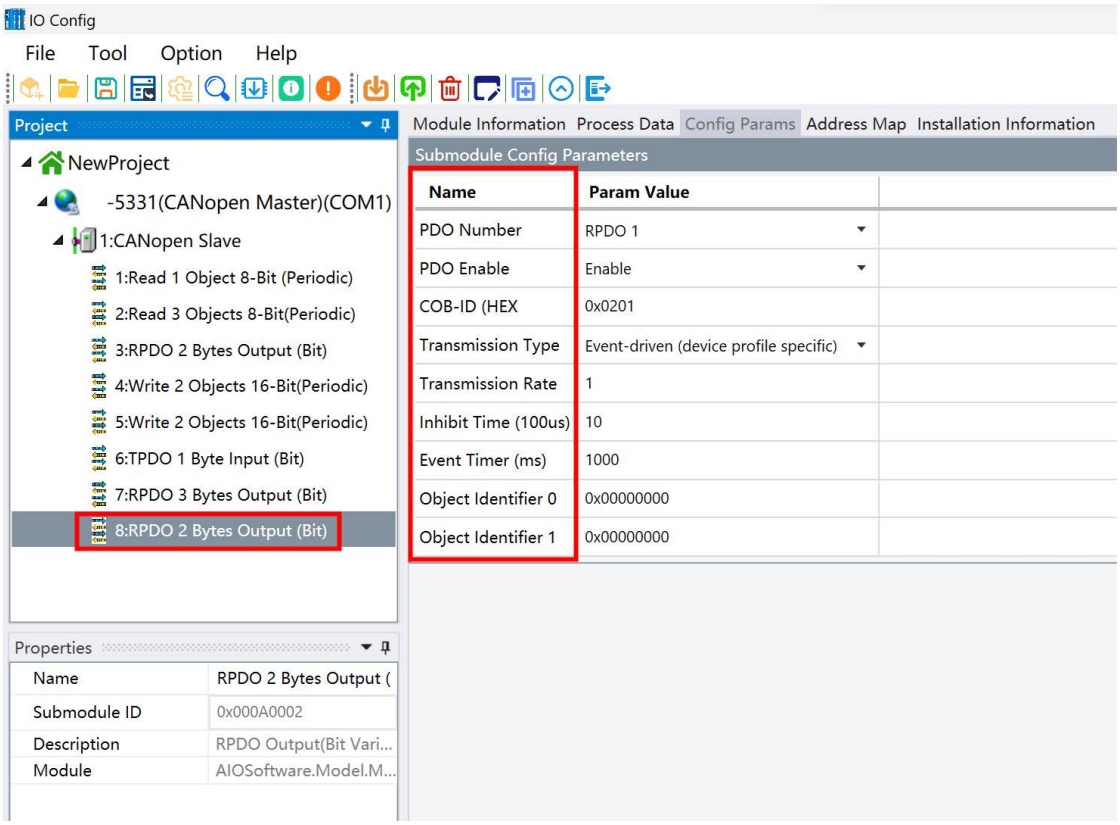

RPDO Number： RPDO1、RPDO2、RPDO3……RPDO64

PDO Enable： enable、disable can optional, Default: enable

COB-ID(HEX)： 16#0x200+Node_ID

Transmission Type： Synchronous (acyclic), Synchronous (cyclic) Event-driven (manufacture specific), Event-driven (device profile specific) can be optional, Default: Event-driven (device profile specific)

Transmission Rate： 8bit unsigned type，Default：1

Inhibit Time(100us)： inhibit time（100us）, the minimum interval between two PDO transmissions ,16bit unsigned type，Default：10

Event Timer (ms) ,16bit unsigned type，Default：1000

Object Identifier： Object identifier (index + subindex + data length).

6.2.2 EMCY control module

EMCY Control module configuration parameters：EMCY override forbid, enable can

be optional，Default：disable.

An emergency packet is triggered by a fatal error inside the device and sent by the related application device to another device with the highest priority. Error alarm signal for interrupt type.

An emergency message consists of 8 bytes in the following format:

sender →receiver(s)

COB-ID	Byte0-1	Byte2	Byte3-7
0x080+Node_ID	Error Code	Error Register (Object 0x1001)	Manufacture-specific error area

Table 3-5 lists the hexadecimal emergency error code, The 'xx' parts of the emergency error code is defined by the corresponding device subprotocol.

Table 3-5 emergency error code（hexadecimal）

Emergency error code	**Code function description**
00xx	Error Reset or No Error
10xx	Generic Error
20xx	Current
21xx	Current，device input side
22xx	Current，inside the device
23xx	Current，device output side
30xx	Voltage
31xx	Mains voltage
32xx	Voltage inside the device
33xx	Output voltage
40xx	Temperature
41xx	Ambient temperature
42xx	Device temperature
50xx	Device hardware
60xx	Device software
61xx	Internal software
62xx	User software

63xx	Data set
70xx	Additional modules
80xx	Monitoring
81xx	communication
8110	CAN overrun
8120	Error Passive
8130	Life Guard Error or Heartbeat Error Or Heartbeat Error
8140	Recovered from Bus-Off
82xx	Protocol Error
8210	PDO no processed Due to length error Due to length error
8220	Length exceeded
90xx	External error
F0xx	Additional functions
FFxx	Device specific

The error register is in the object dictionary (index 0x1001) of the device. Table 3-6 shows the bit definition of the error register. The device can map internal errors into this status byte and provide a quick view of current errors.

Table 3-6： Bit Definitions for 8-Bit Error Register

Bit	Error Type
0	Generic
1	Current
2	Voltage
3	Temperature
4	Communication
5	Device profile specific
6	Reserved (=0)
7	Manufacturer specific

Manufacture-specific error fields may contain additional device-related error messages.

The emergency message is triggered by a fatal error inside the device, and is sent to other devices by the relevant application device with the highest priority. This applies to the error alarm signal of the interrupt type.

The emergency alarm function can be realized by adding sub-module for the EMCY control module. The data address of the EMCY control module corresponds to the following:

Data Direction	Word Offset	Description	High Byte								Low Byte								
		Bit	7	6	5	4	3	2	1	0	7	6	5	4	3	2	1	0	Data Specification
Input	0	Status word	EMCYDATA_Reset	Counter_Reset	Overflow_Reset	NonEmpty_Reset	/		Overflow	NonEmpty	/	NodeID							
	1	Overflow counter	Overflow_Couter																
	2	EMCY data1	Error_Code																
	3	EMCY data2	Manufacture_Data_0								Error_Register								
	4	EMCY data3	Manufacture_Data_2								Manufacture_Data_1								
	5	EMCY data4	Manufacture_Data_4								Manufacture_Data_3								
Output	0	Scan control word	EMCYDATA_Reset	Counter_Reset	Overflow_Reset	NonEmpty_Reset	/				/								
		Red：Read-only Blue：Feedback Green：Resettable	Control Flow： 1. Wait until the NonEmpty bit is set to 1, An urgent packet is received. 2. Read emergency message information NodeID, Error_Code, Error_Register, and Manufacture_Data to process alarm information. 3. Control output bit "NonEmpty_Reset" rising edge to clear the "input NonEmpty "flag. 4. If the Overflow bit is set to 1, it indicates that urgent packets are discarded. Overflow_Couter indicates the number of discarded urgent packets. 5. Control the output bit Overflow_Reset, Counter_Reset rising edge to clear the input Overflow, Overflow_Couter. 6. It could control the rising edge of the output bit **EMCYDATA_Reset** to clear urgent packets NodeID, Error_Code, Error_Register, and Manufacture_Data .																

Notes: Blue: feedback, Green: resettable

Control Flow:

1.The input bit “non-Empty” is set to “1” indicates “Received 1 urgent message”.

2.Read emergency message information “Node ID, Error Code, Error Register, Manufacture Data,” and handle alarm information

3.Control the rising edge of the output bit “Non-Empty Reset” to clear the input mark “non-Empty”.

4.If the input bit “Overflow” is set to “1”, it means that there are currently urgent messages being discarded. “Overflow Couter” indicates the number of discarded urgent messages.

5.Control the rising edge of the output bits “Overflow Reset, Counter Reset” to clear the input marks “Overflow, Overflow Couter”.

6.The emergency message information “Node ID, Error Code, Error Register, Manufacture Data” can be cleared by controlling the rising edge of the output bit

"EMCYDATA Reset".

6.2.3 NMT - Network Management

CANopen NMT network management function can be realized by reading and writing the NMT control field in the "System Control Area".

The NMT command word is a network management control command, and the valid command word values are as follows:

0x01：start the remote node

0x02：stop the remote node

0x80：enter the pre-operation state

0x81：reset node

0x82：reset communication

Writing other NMT command values will be ignored. When the trigger bit changes from "0" to "1", an NMT command will be sent. The NMT slave address is the address of the remote node. The value is "1-127", and "0" represents the broadcast address. The NMT status contains the current status of all slaves in the current network **(to obtain a valid slave status, the error control function "Node Guarding" or "Heartbeat" of the slave must be activated).** The status content of the slave station is read-only, and any value written will be ignored. The status corresponding to the status value is shown **in "Table 7"**. The initialization state means that the master station has received the "Boot-up" startup message from the slave station. If the slave station is offline, it means that the master station has timed out in querying the status of the slave station or receiving the heartbeat packet from the slave station. When receiving the status information from the slave station, there are stop, operation and pre-operation three states. Unknown status means that no slave status information was received.

Table 7. Slave Status List

Status Value	Node Status
0x00	Initialization status
0x01	Offline status
0x04	Stop status
0x05	Operation status
0x7F	Pre-operation status
0x0F	Unknown status

The control function of the slave station status can be realized by adding the sub-module for the NMT network management module.

The data address of the NMT network management module is shown in the figure below:

Data Direction	Word Offset	Description	High Byte								Low Byte								
		Bit	7	6	5	4	3	2	1	0	7	6	5	4	3	2	1	0	Data Specification
Input	0	NMT (Control Word)	NMT (Command Word)								0->1 Trigger bit	NodeID，0 (Broadcast Address)							Output NMT control word feedback
Output	0	NMT (Control Word)	NMT(Command Word)								0->1 Trigger bit	NodeID，0 (Broadcast Address)							NMT Control Word
	Blue: Feedback	Control Flow: 1. NodeID Specifies the node address to be operated. 0 indicates the broadcast address. 2. Assign the NMT command word. 3. Trigger bit 0->1 Rising edge triggers the NMT command to be sent.																	

Notes: (Blue): Data feedback

Control Flow:

1. “Node ID” node address assignment indicates the node ID to be operated, and “0” represents the broadcast address.

2. NMT” command word assignment.

3. Trigger bit “0->1” indicates that the rising edge triggers the sending of “NMT” command.

6.2.4 SDO Control module

The online read and write function of SDO can be realized by reading and writing to the SDO control domain in the "System Control area". The specific encoding format of the data is shown in Table 9.

Table 9.SDO Control register encoding format

Data Direction	Word Offset	Description	High Byte								Low Byte								
		Bit	7	6	5	4	3	2	1	0	7	6	5	4	3	2	1	0	Data Specification
Input	0	Index	Index																
	1	Node ID/ Sub-index	/	NodeID							SubIndex								
	2	Control word	Abort_Code_Reset	Done_Reset	Error_Reset	/		SDO_Done	SDO_Error	SDO_Busy	/	Trigger	RW_Type	Byte_Len					
	3	Stop Code	Abort_Code_3								Abort_Code_2								
	4		Abort_Code_1								Abort_Code_0								
	5	SDO data1	SDO_Data_1																
	.	.	.																
	.	.	.																
	20	SDO data16	SDO_Data_16																
Output	0	Index	Index																
	1	Node ID/ Sub-index	/	NodeID							SubIndex								
	2	Control word	Abort_Code_Reset	Done_Reset	Error_Reset	/					/	Trigger	RW_Type	Byte_Len					
	3	SDO data 1	SDO_Data_1																
	.	.	.																
	.	.	.																
	18	SDO data16	SDO_Data_16																
		Red: Read-only Blue: Feedback Orange: conditional feedback Green: Resettable	Control Flow: A: Reading a Flow 1. Index/SubIndex/NodeID (Set object Index/ sub-index/node address information). 2. Set RW_Type to 0 ,it indicates the SDO upload. 3. Set the Trigger bit to trigger the rising edge , and the SDO transmission starts, and then the SDO_Busy bit is forced to 1. 4. The user waits for SDO_Done to complete to force bit to 1. 5. If SDO_Error and Abort_Code are 0 in SDO transmission, Byte_Len stores the byte length of read object data, and SDO_Data stores the object value. The effective byte length is Byte_Len. 6. If the SDO transfer fails, the SDO_Error bit is set to 1, and the Abort_Code stores the abort_code, indicating the reason for the failure. Byte_Len and SDO_Data are cleared. 7. Control the rising edge of the Done_Reset/Error_Reset bit to clear the SDO_Done/SDO_Error flag bit to start the next transmission. 8. It could control the Abort_Code_Reset bit rising edge to clear the Abort_Code as error code. B: Writing a Flow 1. Index/SubIndex/NodeID (Set object Index/ sub-index/node address information). 2. Set RW_Type to 1, it indicates SDO download, and set output Byte_Len/SDO_Data (output data length and output data value). The output value will be fed back to the corresponding input value. 3. Set the Trigger bit to trigger the rising edge, and the SDO transmission starts, and then the SDO_Busy bit is forced to 1. 4. The user waits for SDO_Done to complete to force bit to 1. 5. If the SDO transmission is normal, and SDO_Error and Abort_Code will be 0. 6. If the SDO transmission fails and the SDO_Error bit forced to 1, and the Abort_Code will store the abort_code, and it will indicate the reason for the failure. 7. Control the rising edge of the Done_Reset/Error_Reset bit to clear the SDO_Done/SDO_Error flag bit to start the next transmission. 8. It could control the Abort_Code_Reset bit rising edge to clear the Abort_Code as error code.																	

Notes：Red: Read-only, Blue: feedback, Orange: conditional feedback, Green: resettable.

Index of the object. Sub Index indicates the parameter of the object to be accessed.

The SDO server slave number has a valid address range of 1-127.

The object dictionary Data Type is defined as shown in Table 10.

Table 10 object dictionary Data Type

Number	Data Type
0x01	BOOLEAN
0x02	INTEGER8
0x03	INTEGER16
0x04	INTEGER32
0x05	UNSIGNED8
0x06	UNSIGNED16
0x07	UNSIGNED32
0x08	REAL32
0x09	VISIBLE STRING
0x0A	OCTET STRING
0x0B	UNICODE_STRING
0x0C	TIME_OF_DAY
0x0D	TIM_DIFFERENCE

Control Flow:

A: Read Flow

1. Set object index/ Sub-index/Node address information (Index/Sub Index /Node ID)

2. Set RW type to “0”, SDO representing is “upload”.

3. Set the trigger by rising edge, SDO start of transfer, SDO_Busy showed “1”.

4. The user waits for SDO Done to complete position 1.

5.If SDO transfer normal ,SDO_Error and Abort Code are showed “0”, Byte_Len stores the byte length of the read object data, SDO_Data stores the value of the object, and the effective byte length is Byte_Len.

6.If SDO transfer fails, SDO_Error showed “1” Abort_Code stores the abort code, indicating the cause of the failure. Byte_Len and SDO_Data are cleared.

7. Control the rising edge of the Done_Reset/Error_Reset to clear the SDO_Done/SDO_Error flag bit so that the next transmission can begin.

8. Control the Abort_Code_Reset bit rising edge to clear the Abort_Code error.

B: Write Flow

1. Set object index/ Sub-index/Node address information (Index/Sub Index /Node ID)

2. Set RW type to “1”, SDO representing is “download” , Set the output data length and output data Byte_Len/SDO_Data, and the output value will be feedback to the corresponds input value.

3. Set the trigger by rising edge, SDO start of transfer, SDO_Busy showed “1”.

4. The user waits for SDO Done to complete position 1.

5. If the SDO transfer normal ,SDO_Error and Abort Code are showed “0”,

If the SDO transfer fails, SDO_Error bit is set to 1, and the Abort_Code stores the abort code, indicating the reason for the failure.

7. Control the rising edge of the Done_Reset/Error_Reset to clear the SDO_Done/SDO_Error flag bit so that the next transmission can begin.

8. Control the Abort_Code_Reset bit rising edge to clear the Abort_Code error.

6.2.5 Network Scanned Module

The scanned module of nodes includes:

Network scanning module has 8 nodes

Network scanning module has 16 nodes

Network scanning module has 32 nodes

Network scanning module has 64 nodes

Network scanning module has 126 nodes

There are a maximum of 127 nodes on the CANopen network, and the gateway itself occupies one node address. The network scan function allows you to scan the basic information of the slave devices on the CANopen network.

The network scanning function is realized by adding the network scanning module. Network scanning module data address mapping is as follows:

Data Direction	Word Offset	Description	High Byte								Low Byte								
		Bit	7	6	5	4	3	2	1	0	7	6	5	4	3	2	1	0	Data Specification
Input	0	Scan status word	Module information has scanned number of network nodes								/						Scanning	0->1 Trigger bit	The blue data bit is the output feedback value.
	1	Module information	Node ID								Node state machine								
	2	Module information	Node ID								Node state machine								
	.	.	.								.								
	.	.	.								.								
	126	Module information	Node ID								Node state machine								
Output	0	Scan Control word	/								/							0->1Trigger bit	Scanning start trigger bit.
		Red：Read-only Blue：Feedback	Control Flow： 1. The output trigger bit 0->1 rises to start scanning. 2. When the scanning status is set to 1, the number of nodes and module information are cleared. 3. Wait until the scan is completed, and then status is cleared. 4. The number of nodes contains the number of all nodes detected on the current network, and the ID and state machine information of storage nodes in the module information.																

Notes: Green: read-only; Blue: Feedback

Control Flow:

1. The output trigger bit 0->1 rises to start scanning.

2. When the status is set to 1, the number of nodes and module information are cleared.

3. Wait until the scanning is completed, and the status bit is cleared.

4. The number of nodes contains the number of all nodes detected on the current network, and the ID and state machine information of storage nodes in the module information.

A Dimension drawing

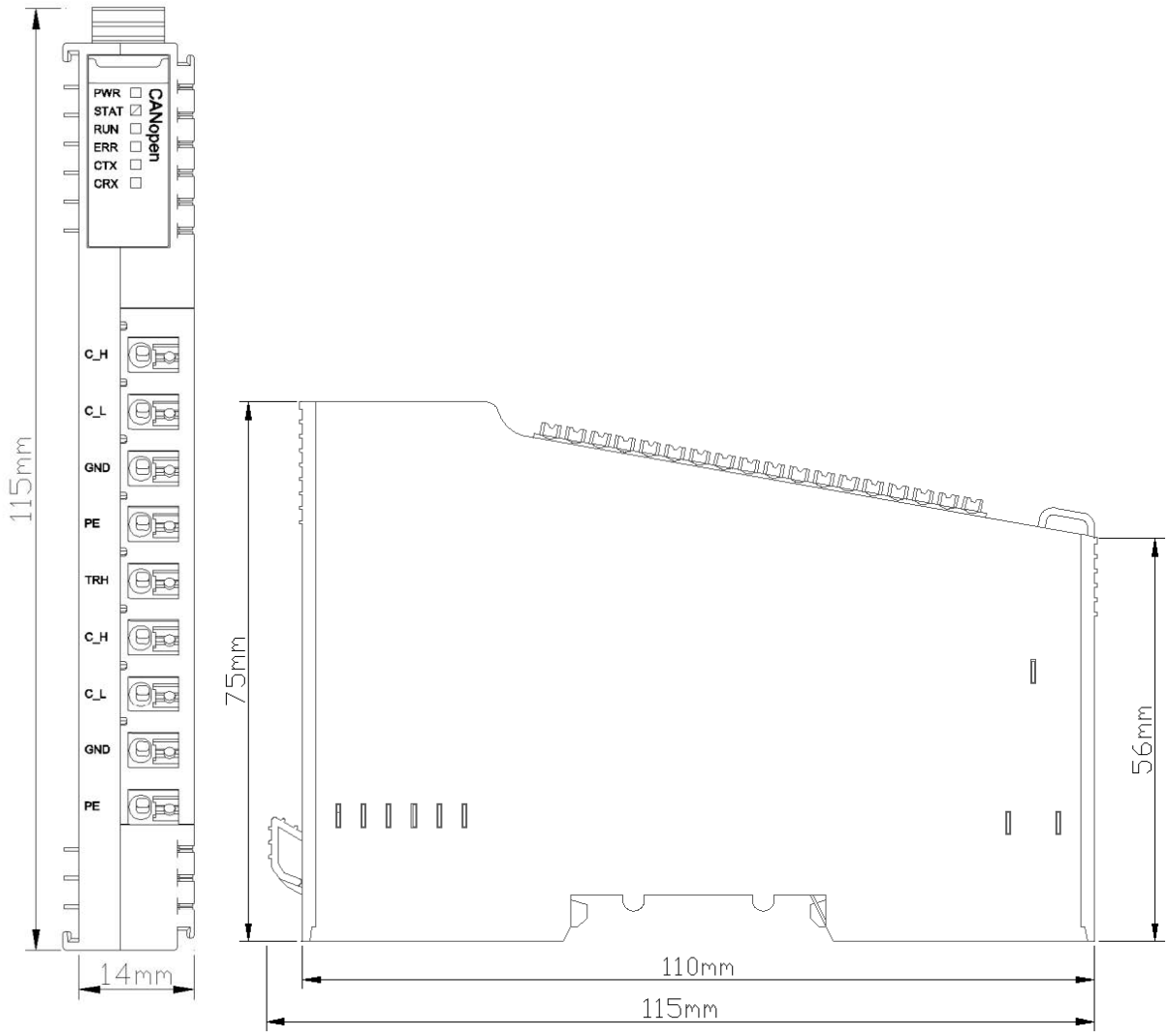

NT-5711 Bus extended master module

1 Module Description

The bus extended master module is used to extend the bus. The bus extended master module has no process data and configuration parameters.

2 Technical Parameters

General parameters	
Power	Max.20mA@5.0Vdc
Mounting Type	35mmDIN-Rail
Size	115*14*75mm
Weight	65g
Environment Specification	
Operational Temperature	-40~85℃
Operational Humidity	5%~95% RH (No Condensation)
Ingress Protection Rating	IP20
Bus parameter	
Bus extension spacing	No more than 8 meters
Number of expansion stations	No more than 5 stations

3 Hardware Interface

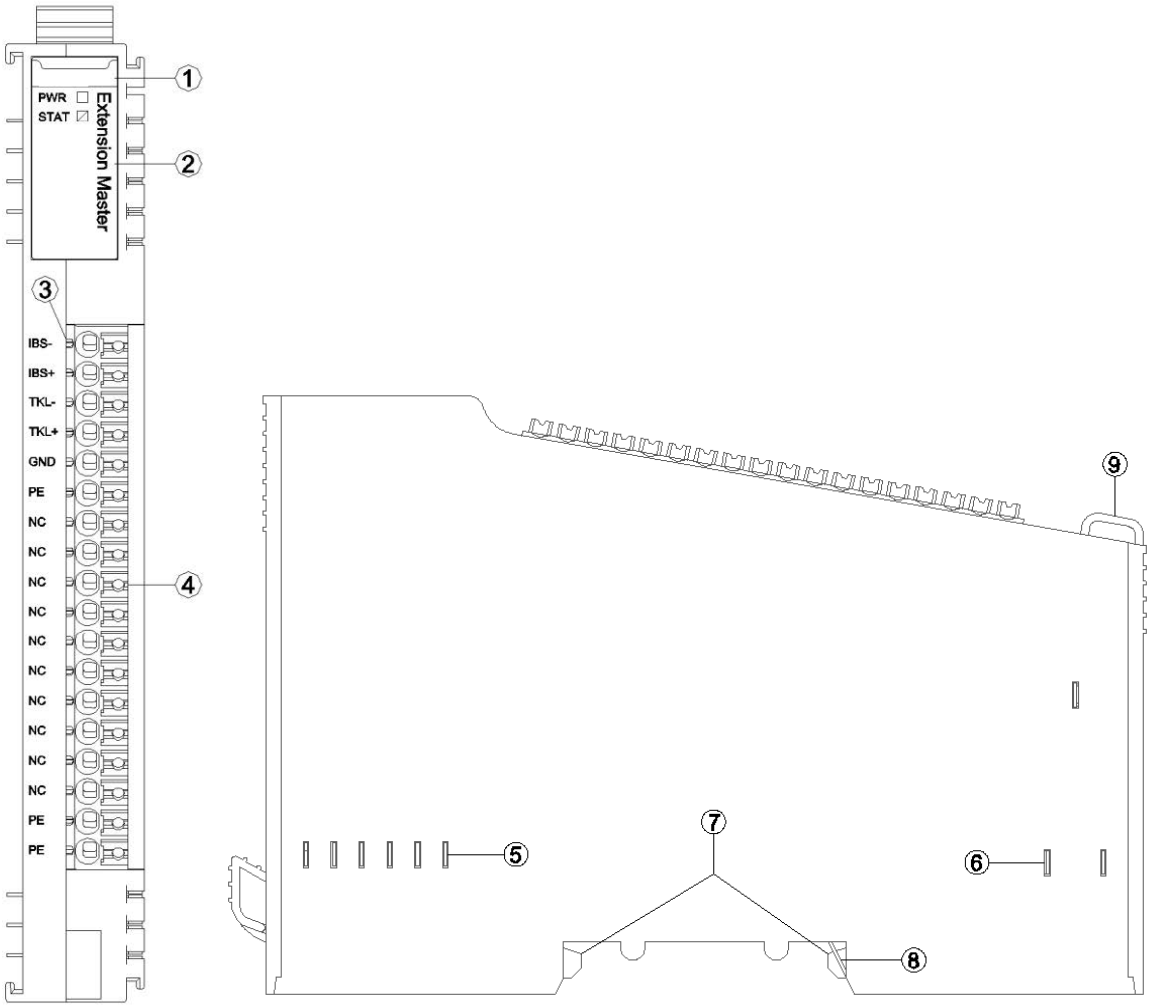

① Module Type

② State indicator

③ Channel indicator (N/A)

④ Wiring Terminal and identification

⑤ Internal Bus

⑥ Field Power (N/A)

⑦ Buckle

⑧ Grounding Spring Sheet

⑨ Fixed Wiring Harness

3.1 LED indicator definition

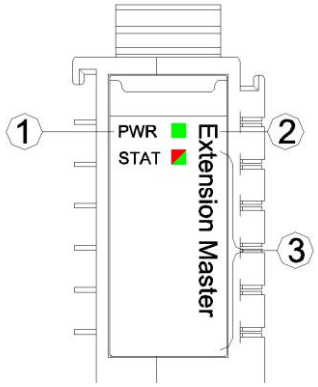

① System Power LED indicator (red)

② Bus State LED indicator (red/green)

PWR POWER STATE (RED)	Definition
ON	System Power Normal
OFF	System Power Failure
STAT Bus STATE (RED/GREEN)	Definition
Green slow flash (2.5Hz)	Module internal bus is not started
Red slow flash (2.5Hz)	Module internal bus offline
ON (GREEN)	Operation normal
Flash(2.5Hz) (RED/GREEN)	Upgrading mode
Flash(10Hz) (RED/GREEN)	Firmware Update
Double Flash (RED)	Module Exception, has been soft-restarted

4 Wiring

Bus extended cable requires 5 core shielded cable, IBS+ and IBS- must use twisted pair. PE guarantees a reliable grounding and the total length of the bus extended cable should not exceed 10 meters.

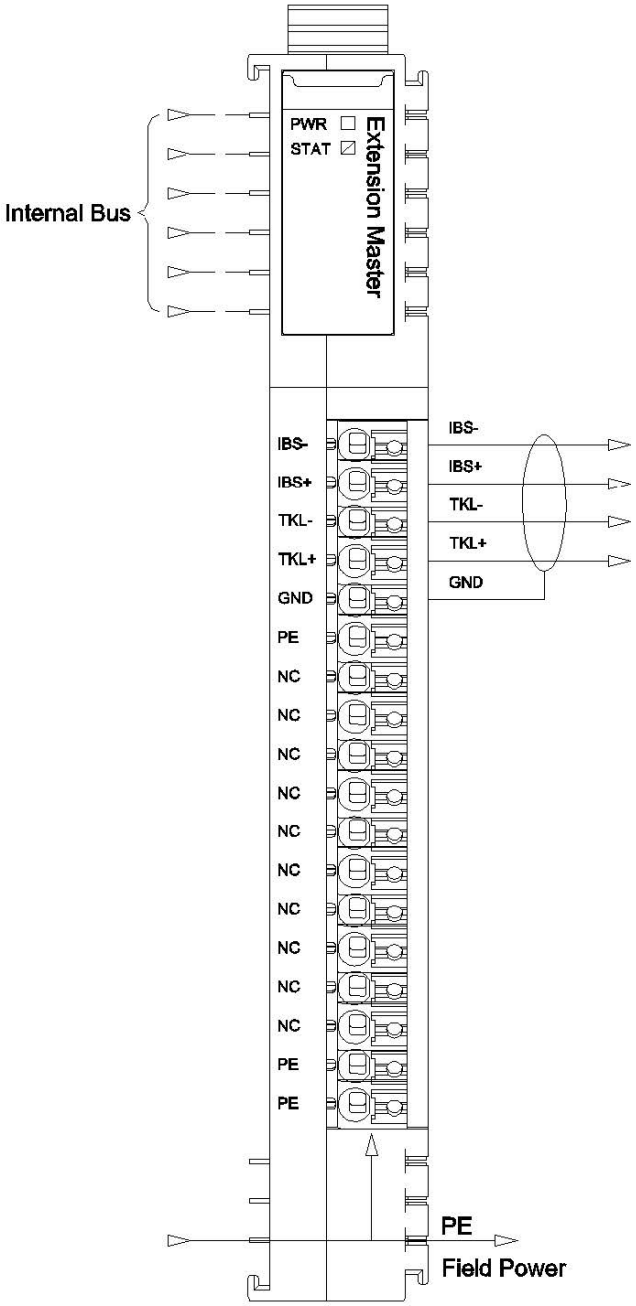

A Dimension drawing

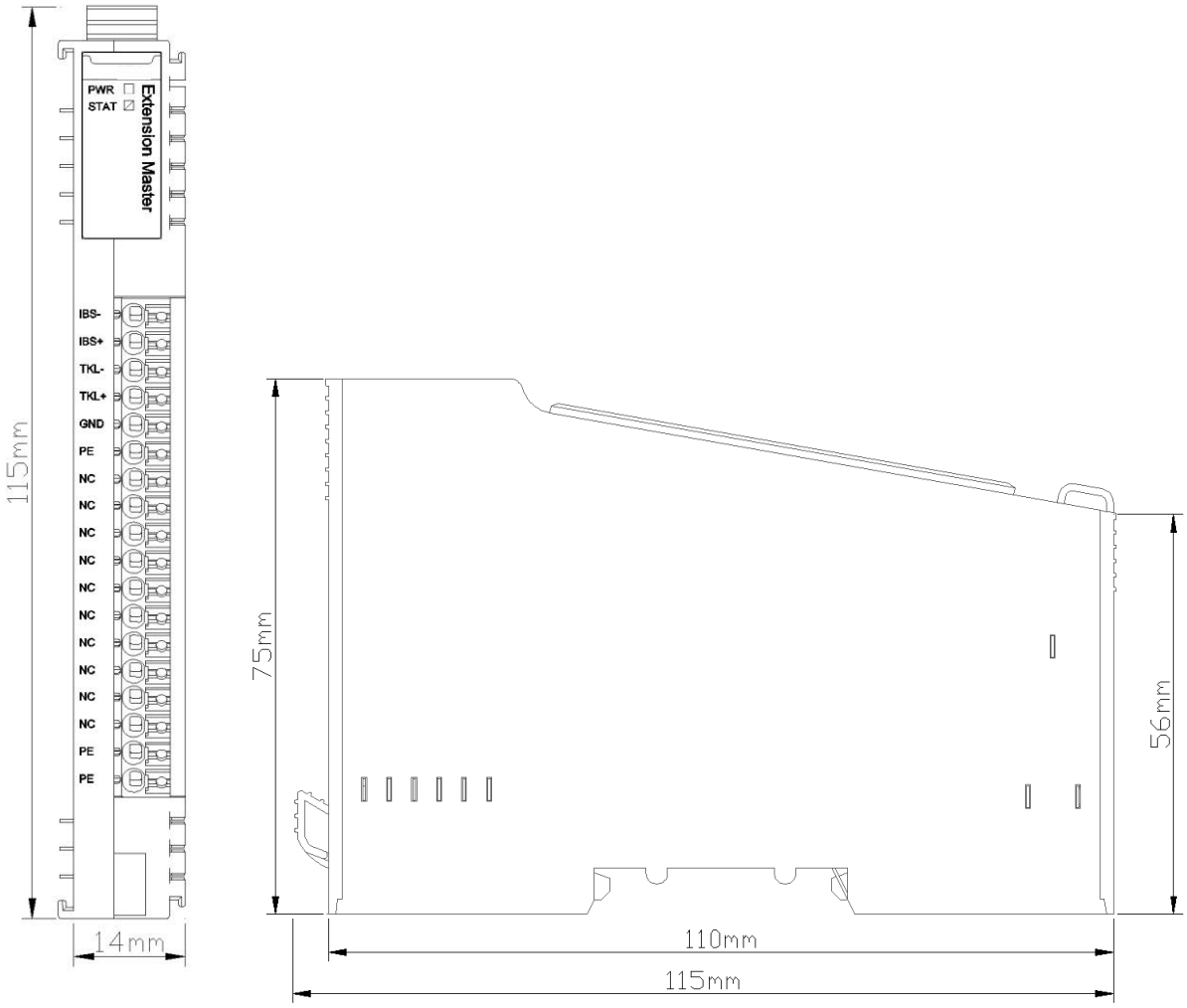

NT-5721 Bus extended slave module

1 Module Description

The bus extended slave module is used to extend the bus. The bus extended slave module has no process data and configuration parameters.

2 Technical Parameters

General parameters	
Power	Max.20mA@5.0Vdc
Mounting Type	35mmDIN-Rail
Size	115*14*75mm
Weight	65g
System Power	Nominal: 24Vdc, Range: 9-36Vdc Protection: Overcurrent Protection, Reverse Protection: YES
Internal BUS Supply Current	Max. 2.5A@5VDC
Isolation	System Power to Field Power Isolation
Field Power Supply	Power Supply：22~28V（Nominal 24VDC） Protection: Reverse Protection: YES
Field Power Supply Current	Max. DC 8A
Environment Specification	
Operational Temperature	-40~85℃
Operational Humidity	5%~95% RH (No Condensation)
Ingress Protection Rating	IP20
Bus parameter	
Bus extension spacing	No more than 8 meters
Number of expansion stations	No more than 5 stations

3 Hardware Interface

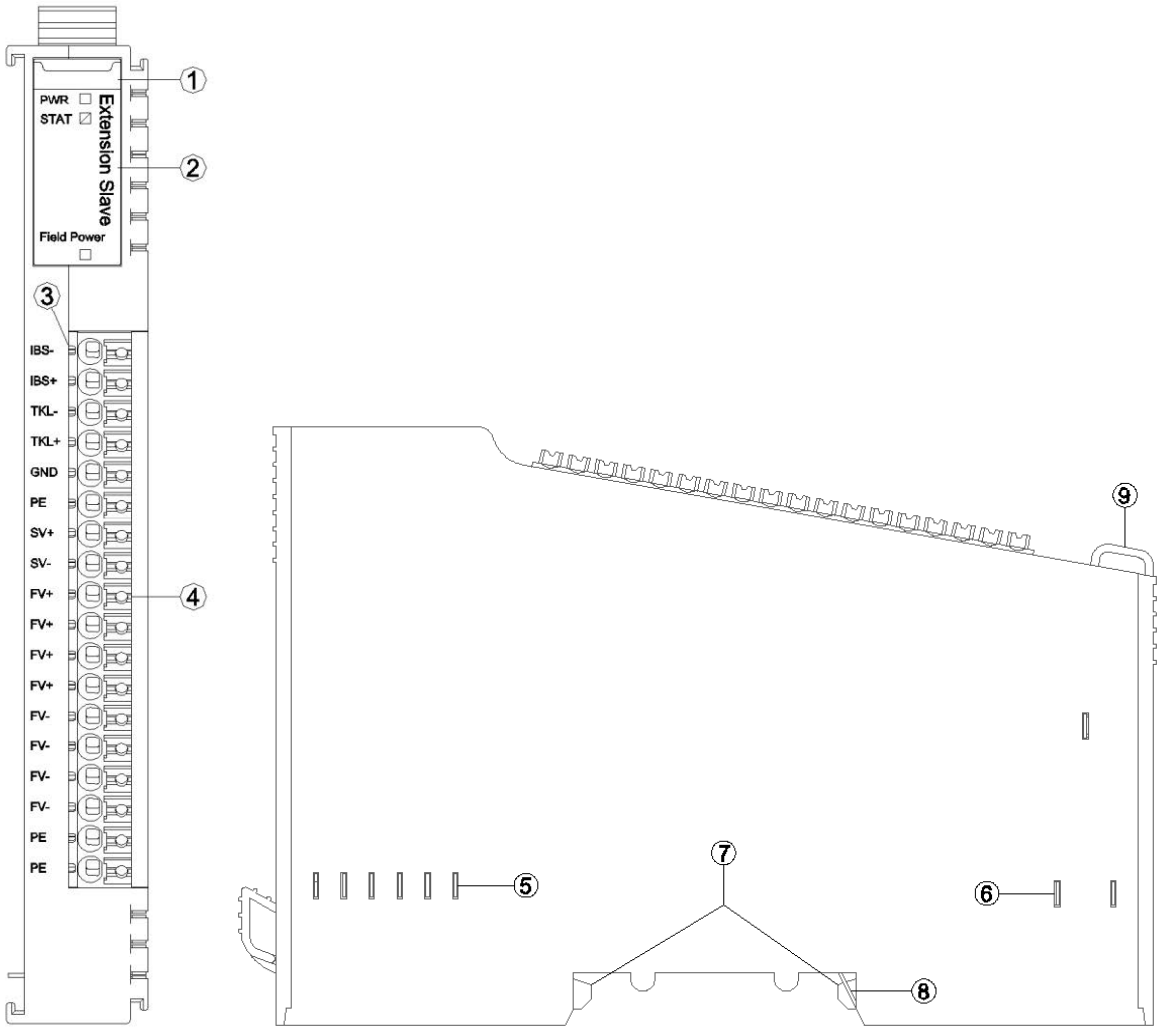

① Module Type

② State indicator

③ Channel indicator (N/A)

④ Wiring Terminal and identification

⑤ Internal Bus

⑥ Field Power

⑦ Buckle

⑧ Grounding Spring Sheet

⑨ Fixed Wiring Harness

3.1 LED indicator definition

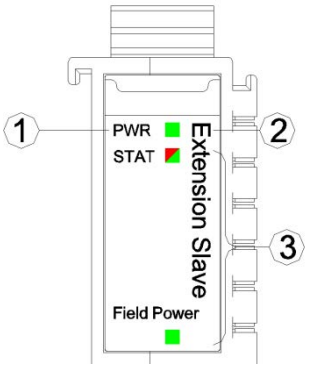

① System Power LED indicator (red)

② Bus State LED indicator (red/green)

PWR POWER STATE (RED)	Definition
ON	System Power Normal
OFF	System Power Failure
STAT Bus STATE (RED/GREEN)	Definition
Green slow flash (2.5Hz)	Module internal bus is not started
Red slow flash (2.5Hz)	Module internal bus offline
ON (GREEN)	Operation normal
Flash(2.5Hz) (RED/GREEN)	Upgrading mode
Flash(10Hz) (RED/GREEN)	Firmware Update
Double Flash (RED)	Module Exception, has been soft-restarted

4 Wiring

Bus extended cable requires 5 core shielded cable, IBS+ and IBS- must use twisted pair. PE guarantees a reliable grounding and the total length of the bus extended cable should not exceed 10 meters.

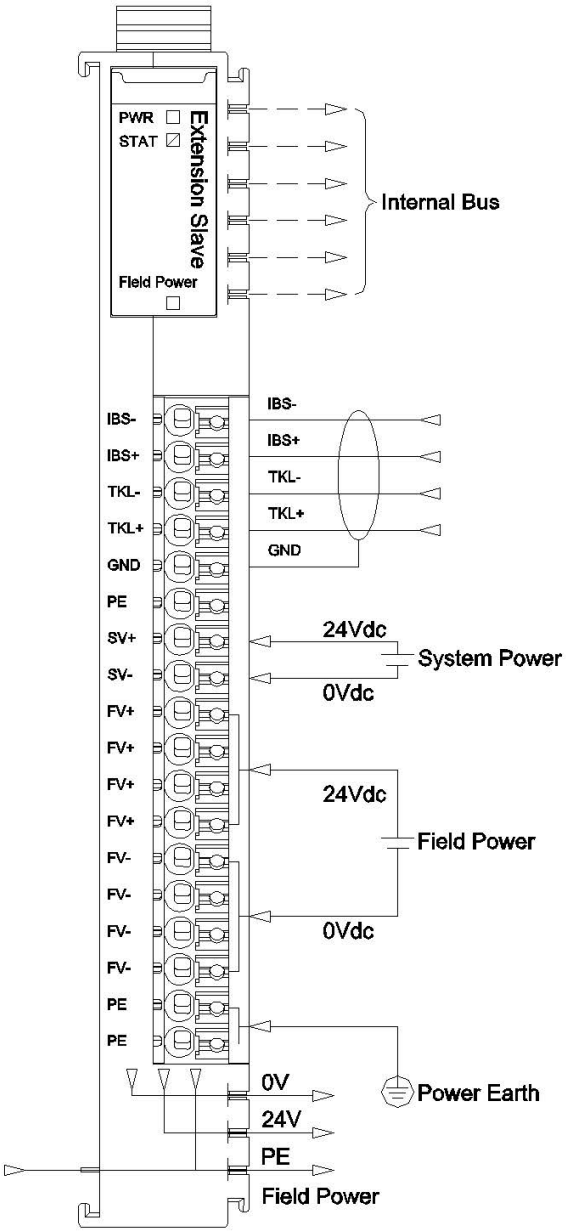

A Dimension drawing

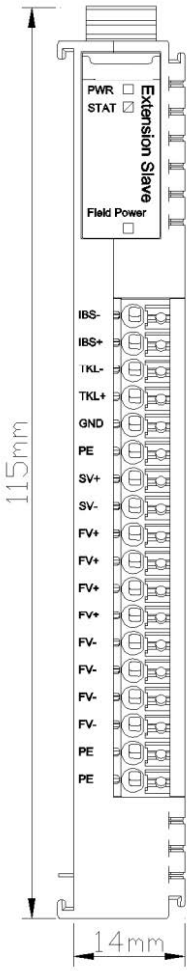

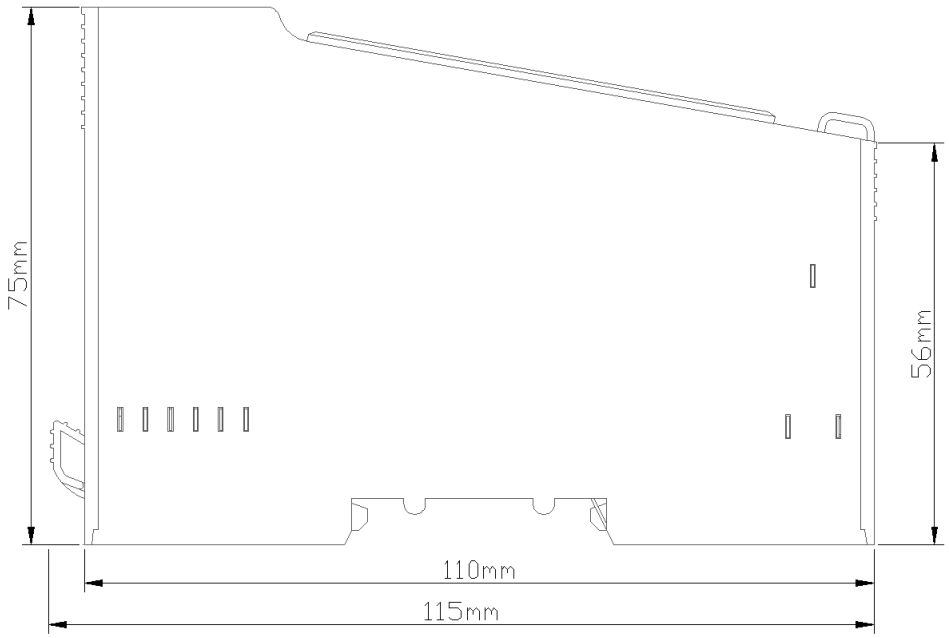

NT-5800 Terminal module

1 Module Description

Terminal modules are used to stabilize the internal bus communication. When the number of adapter extension IO modules reaches 16 or more and terminal modules should be required. When the number of adapter extending IO modules is less than 16, and the terminal module **NT-5810** only for dustproof could be selected. The dustproof terminal could cover the internal bus and field power supply hardware of the last IO module. And terminal modules have no process data and configuration parameters.

General parameters	
Power	Max.20mA@5.0Vdc
Mounting Type	35mmDIN-Rail
Size	115*14*75mm
Weight	65g
Environment Specification	
Operational Temperature	-40~85℃
Operational Humidity	5%~95% RH (No Condensation)
Ingress Protection Rating	IP20

3 Hardware Interface

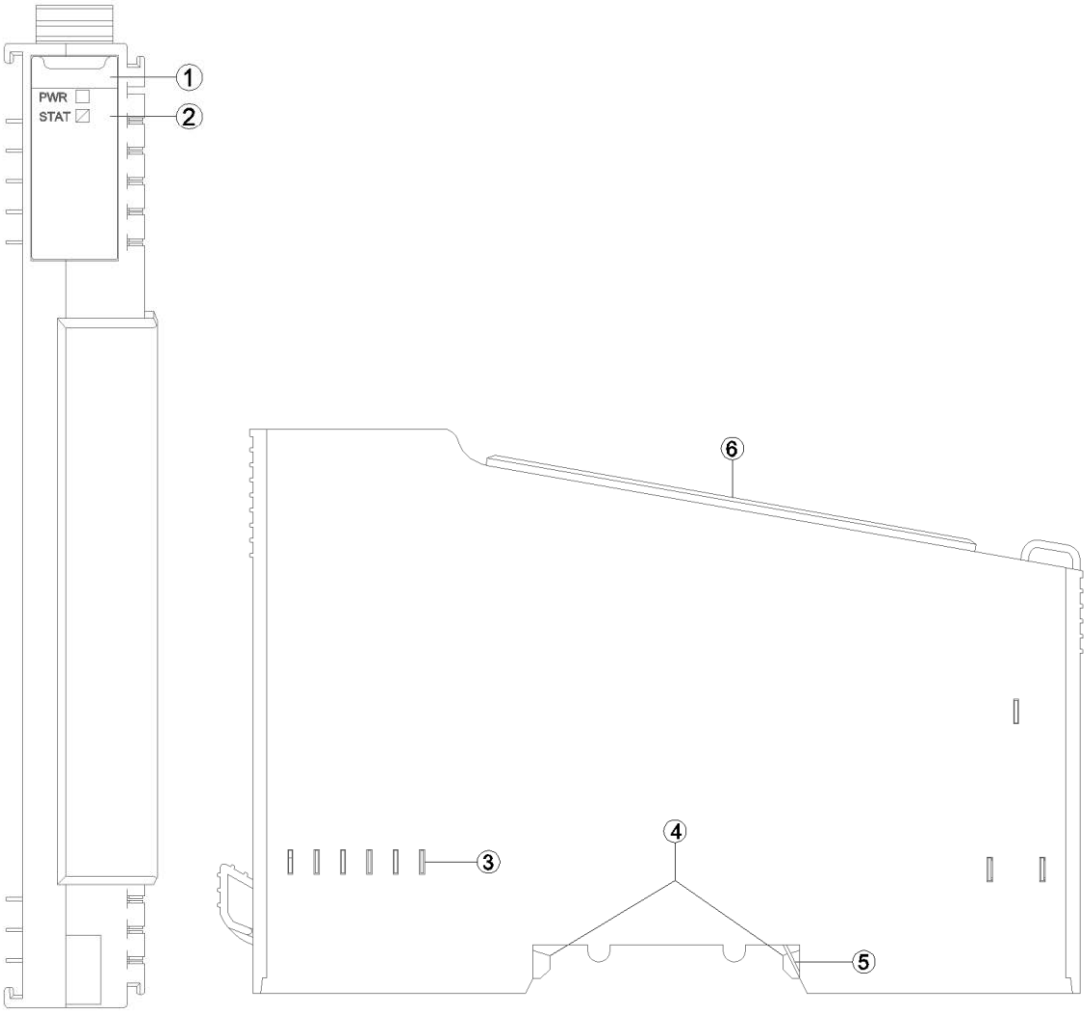

① Module Type

② State indicator

③ Internal Bus

④ Buckle

⑤ Grounding Spring Sheet

⑥ Terminal Cover

3.1 LED indicator definition

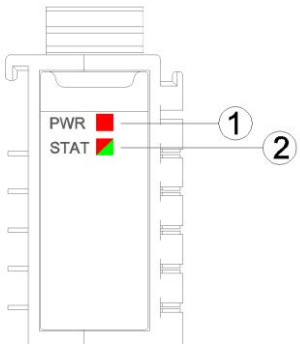

① System Power LED indicator(red)

② Module State LED indicator (red/green)

PWR Power LED Indicator (Red)	Definition
ON	The system power supply is normal.
OFF	The system power supply is failure
STAT Module State LED Indicator (Red/Green)	Definition
Green slow flash (2.5Hz)	Module internal bus is not started
Red slow flash (2.5Hz)	Module internal bus offline
ON (GREEN)	Operation normal
Flash(2.5Hz) (RED/GREEN)	Upgrading mode
Flash(10Hz) (RED/GREEN)	Firmware Update
Double Flash (RED)	Module Exception has been soft-restarted

A Dimension drawing

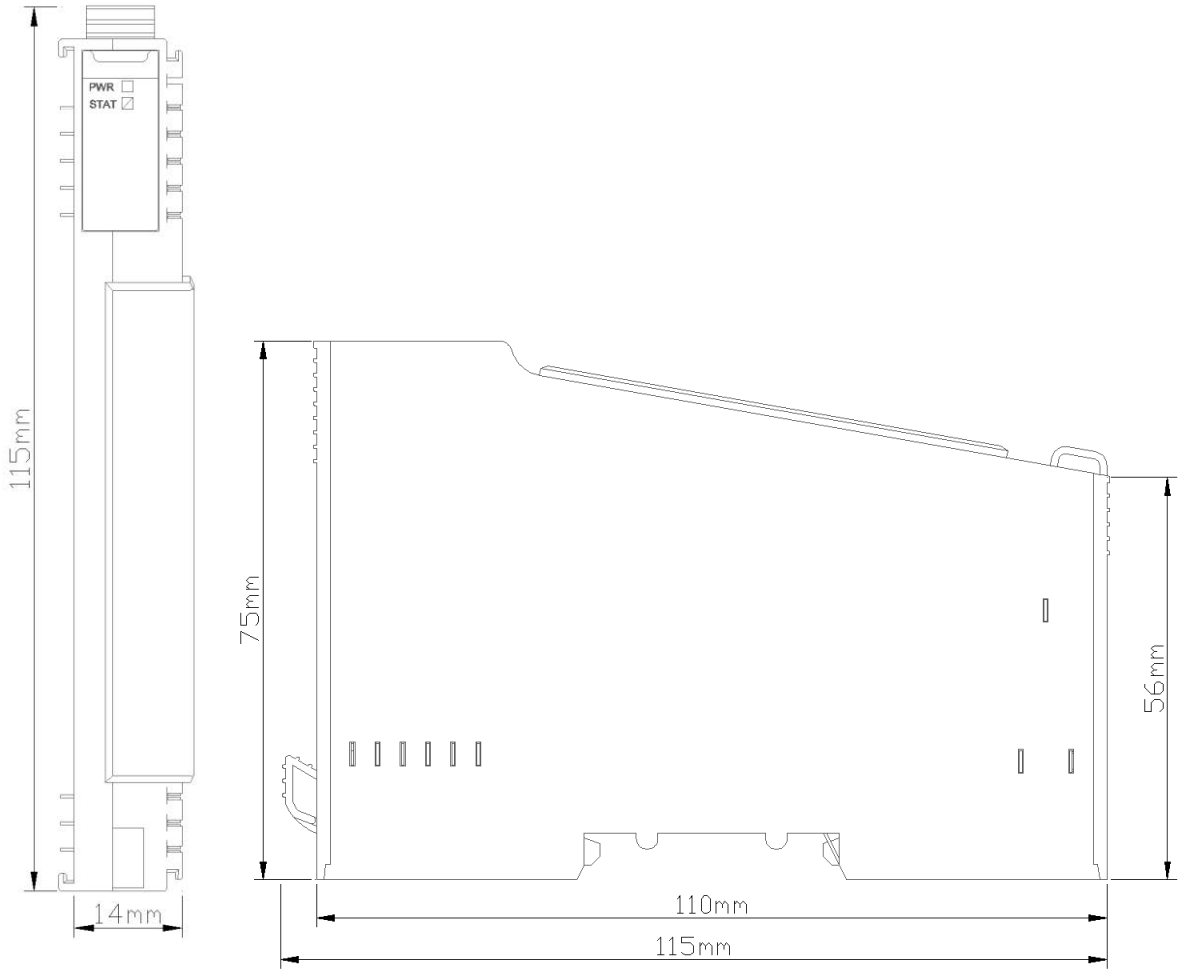

NT-5801Terminal module（Required）

1 Module Description

The terminal module is used to stabilize internal bus communication and it is required. The terminal module NT-5801 has no process data and no configuration parameters. NT-5801 requires no configuration and occupies no slot in configuration.

2 Technical Parameters

None

3 Hardware Interface

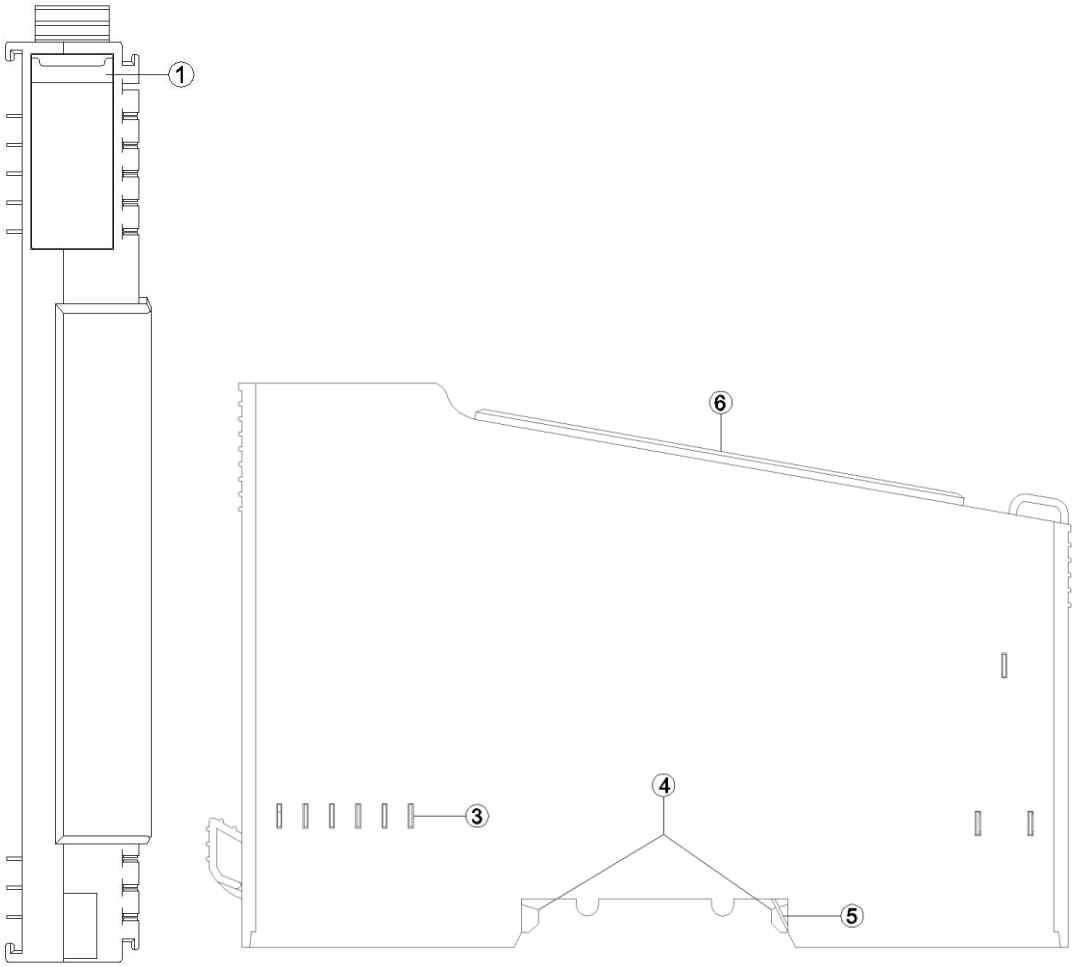

① Module Type

③ Internal Bus

④ Buckle

⑤ Grounding Spring Sheet

⑥ Terminal Cover

3.1 LED indicator definition

None

A Dimension drawing

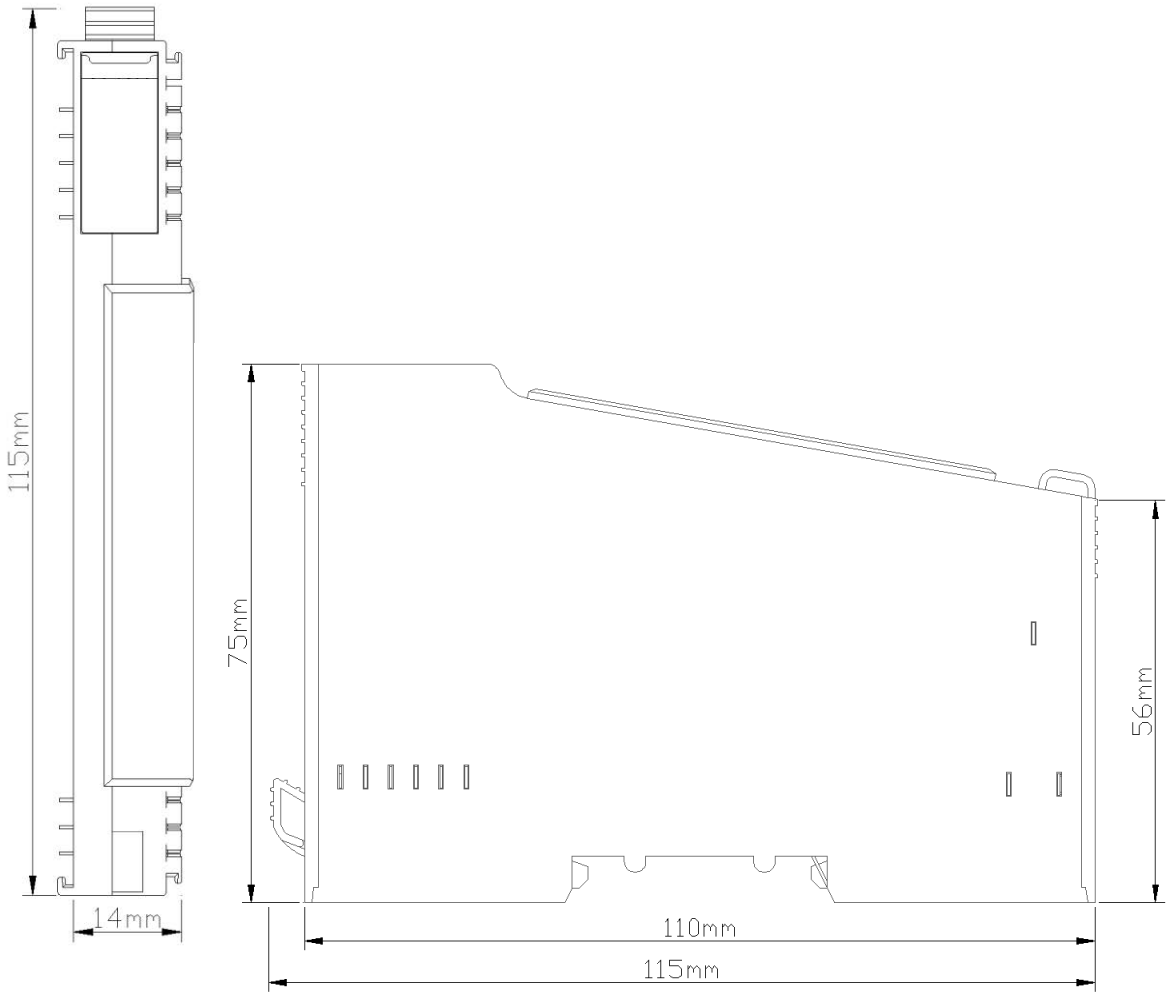

NT-623F 8-channels DI /24VDC/ source or sink type & 8-channels DO /24VDC/ source type

1 Module features

◆ The module supports 8-channel digital input, and supports source type and sink type two-way input. The input voltage is 0V/24VDC.

◆ The module supports 8-channel digital output, Output high level valid, and the output voltage is 24VDC.

◆ Module input channel can collect digital output signal of field equipment. (dry contact or active output)

◆ The module input channel can be connected to the 2-wire or 3-wire digital sensor.

◆ Module input channel supports 32-bit counter for each channel, the counting frequency < 200Hz.

◆ The input channel of the module supports the signal maintenance function, and the maintenance time can be set.

◆ The input channel of the module can set the digital signal input filtering time and the byte transfer order of the counter.

◆ The input channel of the module can set the counting mode and counting direction independently.

◆ Module output channel can drive field equipment .(relay, solenoid valve, etc.)

◆ The output channel of the module is equipped with short circuit, thermal shutdown and overvoltage protection functions.

◆ Module internal bus and field input and output , using Optocoupler isolation.

◆ Module has 16 digital input and output channel LED indicator light.

2 Technical Parameters

General Parameters	
Power	Max.85mA@5.0Vdc
Isolation	I/O to internal bus: opto-coupler isolation (3KVrms)
Field Power	Nominal voltage: 24Vdc Input range: 22~28Vdc
Wiring	I/O wiring: Max.1.0mm² (AWG 17)
Installation	35mm DIN-Rail
Size	115*14*75mm
Weight	65g
Environment Specification	
Working temperature	-40~85℃
Environmental humidity	5%-95% (No Condensation)
Ingress Protection Rating	IP20
Environmental Parameters	
Channel Number	8-channel source/sink type input
Indicator	8 channel input indicators
Open voltage	High input: Min.10Vdc to Max.28Vdc (Common: 0Vdc) Low input: Min.0Vdc to Max.14Vdc (Common: 24Vdc)
Close voltage	High input: Max.5Vdc (Common: 0Vdc) Low input: Min.19Vdc (Common: 24Vdc)
Open current	Max.5mA/ channel @28V
Input impedance	>7.5kΩ
Input delay	OFF to ON: Max.3ms ON to OFF: Max.2ms
Prop filter	Default: 10ms
Sampling frequency	500Hz
Count frequency	<200Hz
Output parameter	
Channel Number	8 channel source type output
LED Indicator	8 channel output indicators
Rated current	Typical value:0.5A
Leakage current	Maximum value: 10uA
Output impedance	<200mΩ
Output delay	OFF to ON: Max.100us ON to OFF: Max.150us
Protection function	Temperature protection: typical value 135℃ Protection current: typical value 1.1A Short circuit protection support

3 Hardware interfaces

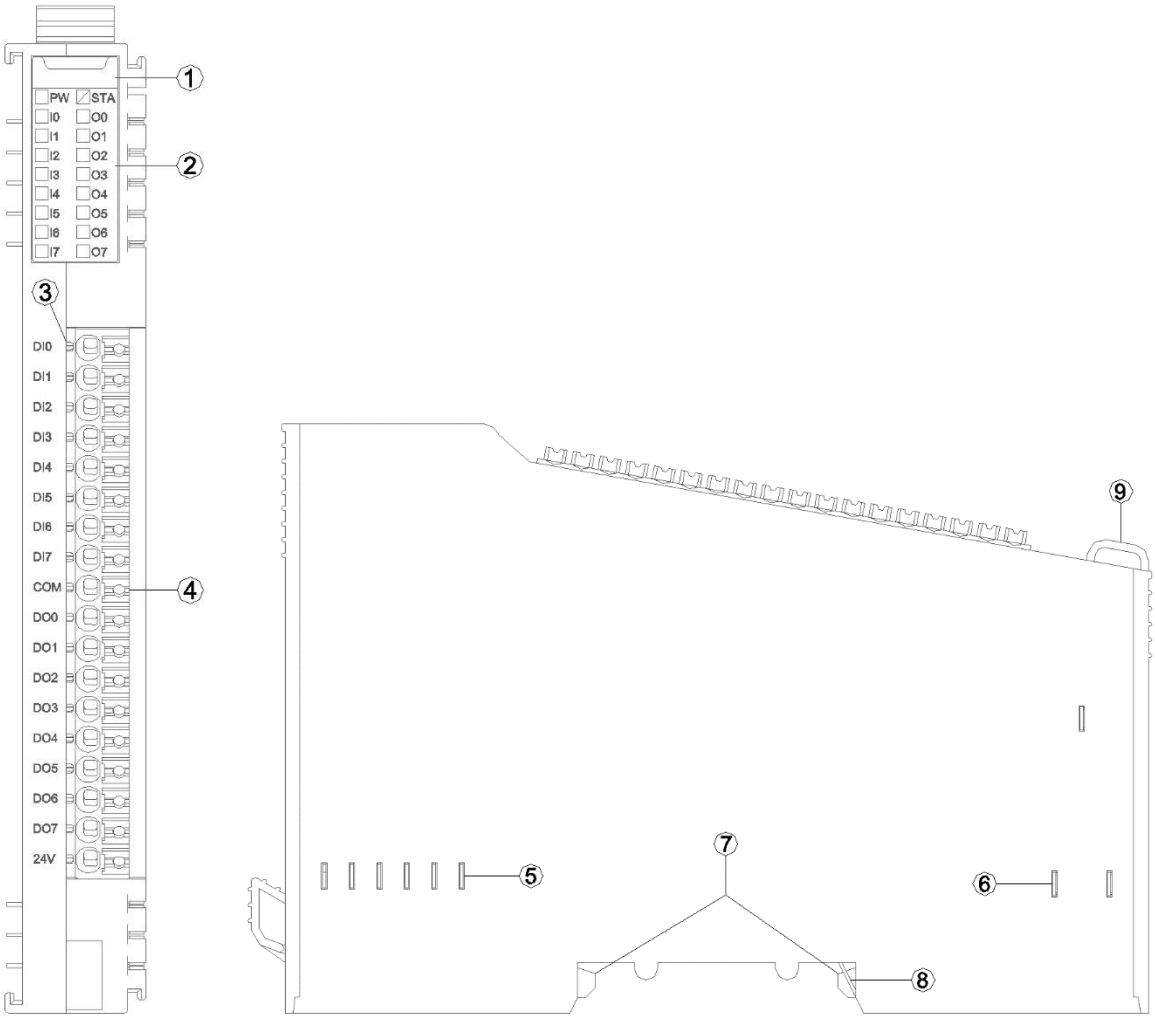

① Module Type

② State indicators

③ Channel indicators

④ Wiring Terminal and Marking

⑤ Internal Bus

⑥ Field Power

⑦ Buckle

⑧ Grounding Spring Sheet

⑨ Fixed Wiring Harness

3.1 LED indicators Definition

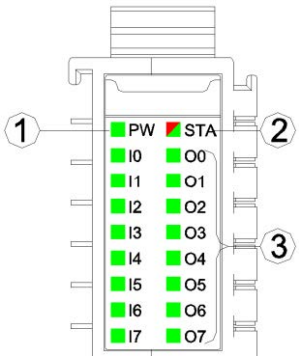

① Power indicator (green)

② Module state indicator (red/green)

③ Input/output channel indicators (green)

PW power indicator	Definition
ON	Internal bus power supply normal
OFF	Internal bus power supply failure
STA module state indicator	Definition
Green slow flash (2.5hz)	The internal bus of the module is not started
Red slow flash (2.5hz)	Module internal bus offline
Green normally on	Module works normally
Flash(2.5Hz) (RED/GREEN)	Operating mode
Flash(10Hz) (RED/GREEN)	Firmware upgrading
Red flashes twice	Module exception has been soft-restarted
I0-I7 input channel indicators	Definition
ON	input signal valid
OFF	input signal invalid
O0-O7 output channel indicators	Definition
ON	Output signal valid
OFF	Output signal invalid

3.2 Field input channel LED indicator (red/green)

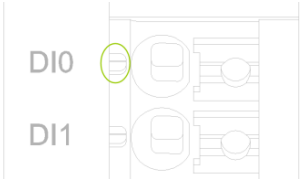

When the COM terminal is connected to a low level and the input channel signal is at a high level, the corresponding channel green indicator is on.

When the COM terminal is connected to a high level and the input channel signal is at

a low level, the corresponding channel red indicator is on.

3.3 Field output channel LED indicator (green)

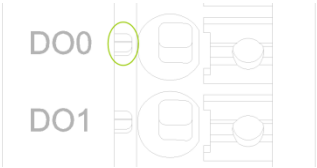

When the output signal of the output channel is valid, the corresponding channel indicator is on.

3.4 Terminal definition

Terminal Number	Symbol	Instruction
1	DI0	Signal input
2	DI1	
3	DI2	
4	DI3	
5	DI4	
6	DI5	
7	DI6	
8	DI7	
9	COM	Input common terminal
10	DO0	Signal output
11	DO1	
12	DO2	
13	DO3	
14	DO4	
15	DO5	
16	DO6	
17	DO7	
18	24V	Power input (*Note1*)

Note 1: when the red LED indicator beside the 24V wiring terminal lights up, it indicates that the fieldbus is powered on, then the maximum output current of each channel is 500mA, and the maximum sum of all output channel currents is 2A. When the 24VDC power is supplied to the 24V wiring terminal separately, the sum of all the output channel currents is at the maximum of 4A (Whether the fieldbus is powered on or not, 24V wiring terminals can both be connected to 24VDC power supply).

It is recommended to use cables with cores smaller than 1mm².

The cold-pressed terminal parameters are as follows:

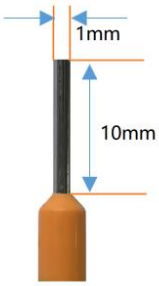

4 Wiring

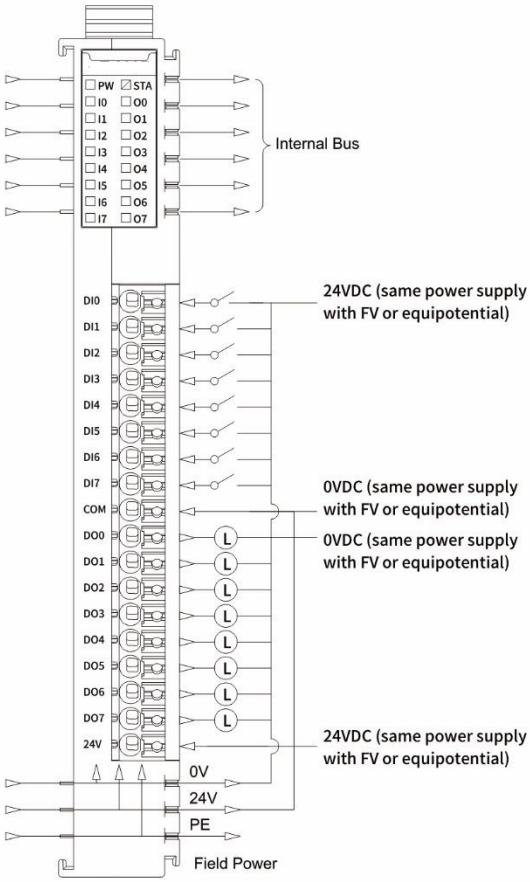

High level

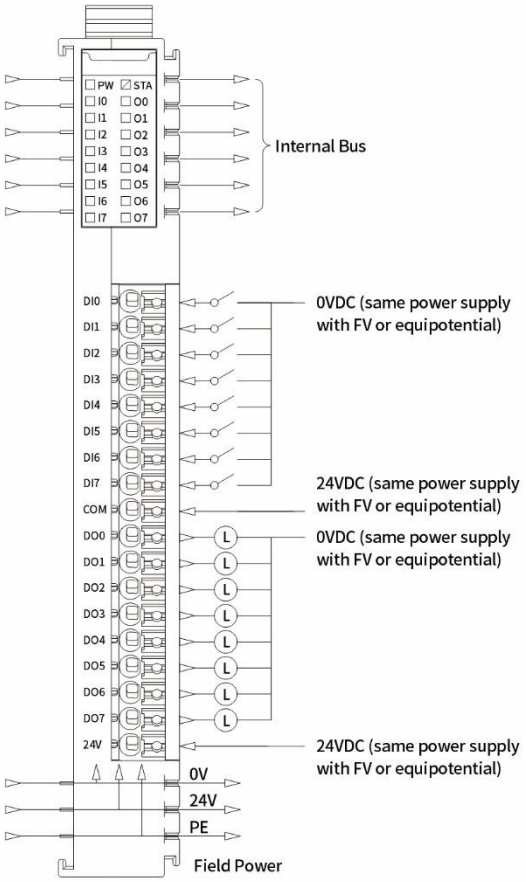
PW
STA
I0
I1
I2
I3
I4
I5
I6
I7
O0
O1
O2
O3
O4
O5
O6
O7
Internal Bus
DI0
DI1
DI2
DI3
DI4
DI5
DI6
DI7
COM
DO0
DO1
DO2
DO3
DO4
DO5
DO6
DO7
24V
0VDC (same power supply with FV or equipotential)
24VDC (same power supply with FV or equipotential)
0VDC (same power supply with FV or equipotential)
24VDC (same power supply with FV or equipotential)
0V
24V
PE
Field Power

Low level

5 Process data definition

<8DI&8DO IO State> Submodule procedure data definition

Input data								
Bit No	Bit 7	Bit 6	Bit 5	Bit 4	Bit 3	Bit 2	Bit 1	Bit 0
Byte 0	DI Ch#7	DI Ch#6	DI Ch#5	DI Ch#4	DI Ch#3	DI Ch#2	DI Ch#1	DI Ch#0
Output data								
Bit No	Bit 7	Bit 6	Bit 5	Bit 4	Bit 3	Bit 2	Bit 1	Bit 0
Byte 0	DO Ch#7	DO Ch#6	DO Ch#5	DO Ch#4	DO Ch#3	DO Ch#2	DO Ch#1	DO Ch#0

Data description:

DI Ch#(0-7): When the corresponding channel input signal is valid, the bit is 1, and when the input is invalid, it is 0.

0: Input signal invalid

1: Input signal valid

DO Ch#(0-7): when this bit is 1, the corresponding channel output signal is valid, the output is high level, and the output is invalid when it is 0.

0: Output signal invalid

1: Output signal valid

<8DI Counter Submodule> Submodule process data definition.

Input data								
Bit No	Bit 7	Bit 6	Bit 5	Bit 4	Bit 3	Bit 2	Bit 1	Bit 0
Byte 0	Counter Value Ch#0							
Byte 1								
Byte 2								
Byte 3								
Byte 4	Counter Value Ch#1							
Byte 5								
Byte 6								
Byte 7								
Byte 8	Counter Value Ch#2							
Byte 9								
Byte 10								
Byte 11								
Byte 12	Counter Value Ch#3							
Byte 13								
Byte 14								
Byte 15								

Byte 16	Counter Value Ch#4
Byte 17	
Byte 18	
Byte 19	
Byte 20	Counter Value Ch#5
Byte 21	
Byte 22	
Byte 23	
Byte 24	Counter Value Ch#6
Byte 25	
Byte 26	
Byte 27	
Byte 28	Counter Value Ch#7
Byte 29	
Byte 30	
Byte 31	

Output data								
Bit No	Bit 7	Bit 6	Bit 5	Bit 4	Bit 3	Bit 2	Bit 1	Bit 0
Byte 0	Counter Reset Ch#7	Counter Reset Ch#6	Counter Reset Ch#5	Counter Reset Ch#4	Counter Reset Ch#3	Counter Reset Ch#2	Counter Reset Ch#1	Counter Reset Ch#0

Data description:

Counter Value Ch#(0-7): count value, 32-bit unsigned integer, automatically zeroing after overflow.

Counter Reset Ch#(0-7): when the data bit changes from 0 to 1 (rising edge), the input counter of the corresponding channel will be cleared.

Note: The maximum counting frequency of the input channel is 200Hz. When the input signal exceeds this frequency, the counting result may be inconsistent with the actual value.

6 Configuration parameter definition

<8DI&8DO IO State> Submodule configuration parameter definition

Configuration parameter								
Bit No	Bit 7	Bit 6	Bit 5	Bit 4	Bit 3	Bit 2	Bit 1	Bit 0
Byte 0	Input Filtering Time(ms)							
Byte 1								
Byte 2	Reserved					Input Holding Time(ms)		
Byte 3	Fault Action for Output Ch#7	Fault Action for Output Ch#6	Fault Action for Output Ch#5	Fault Action for Output Ch#4	Fault Action for Output Ch#3	Fault Action for Output Ch#2	Fault Action for Output Ch#1	Fault Action for Output Ch#0
Byte 4	Fault Value for Output Ch#7	Fault Value for Output Ch#6	Fault Value for Output Ch#5	Fault Value for Output Ch#4	Fault Value for Output Ch#3	Fault Value for Output Ch#2	Fault Value for Output Ch#1	Fault Value for Output Ch#0

Data description:

Input Filtering Time(ms): Channel input filtering time, unit: ms. (Default: 10)

Input Holding Time(ms): Channel input signal holding time, unit: ms. (Default: 0)

0: Disable

1: 200ms

2: 500ms

3: 1000ms

4: 1500ms

5: 2000ms

6: 3000ms

7: 5000ms

Fault Action for Output Ch#(0-7): Fault Output mode. When the IO module detects an internal bus exception and fails to communicate with the adapter, the module enters offline mode, the output data will be processed in this way. (Default: 0)

0: keep the last time output state.

1: output fault value.

Fault Value for Output Ch#(0-7): When the fault output mode is 1, the bit sets

the fault output value, which is output when the IO module internal bus is offline. (Default: 0)

0: output low level.

1: output high level.

<8DI Counter Submodule> Submodule configuration parameter definition

Configuration parameter								
Bit No	Bit 7	Bit 6	Bit 5	Bit 4	Bit 3	Bit 2	Bit 1	Bit 0
Byte 0	Reserved				Storage Enable	Storage Function	32Bit Data Format	
Byte 1	Count Mode Ch#3		Count Mode Ch#2		Count Mode Ch#1		Count Mode Ch#0	
Byte 2	Count Mode Ch#7		Count Mode Ch#6		Count Mode Ch#5		Count Mode Ch#4	
Byte 3	Count Direction Ch#7	Count Direction Ch#6	Count Direction Ch#5	Count Direction Ch#4	Count Direction Ch#3	Count Direction Ch#2	Count Direction Ch#1	Count Direction Ch#0

Data description:

32Bit Data Format: Byte transmission order of channel count values (Default: 0).

0：AB-CD

1：BA-DC

2：CD-AB

3：DC-BA

Storage Function: storage Function is support or not, read only attribute, and this value is the actual value of the module when uploading device parameters.

0: storage is not support

1: storage is support

Storage Enable: Storage enable， when the Storage Function enables, the IO module will save the count value in real time to non-volatile memory, and load the last saved count value when it is powered on next time. (Default: 1)

0：Disabled

1：Enable

Count Mode Ch#(0-7): Input channel count mode. (Default: 0)

0: Rising edge count

1: Falling edge count

2: Double edge count

Count Direction Ch#(0-7): The counting direction of the input channel. (Default: 0)

0: Count up

1: Count down

A Dimension drawing

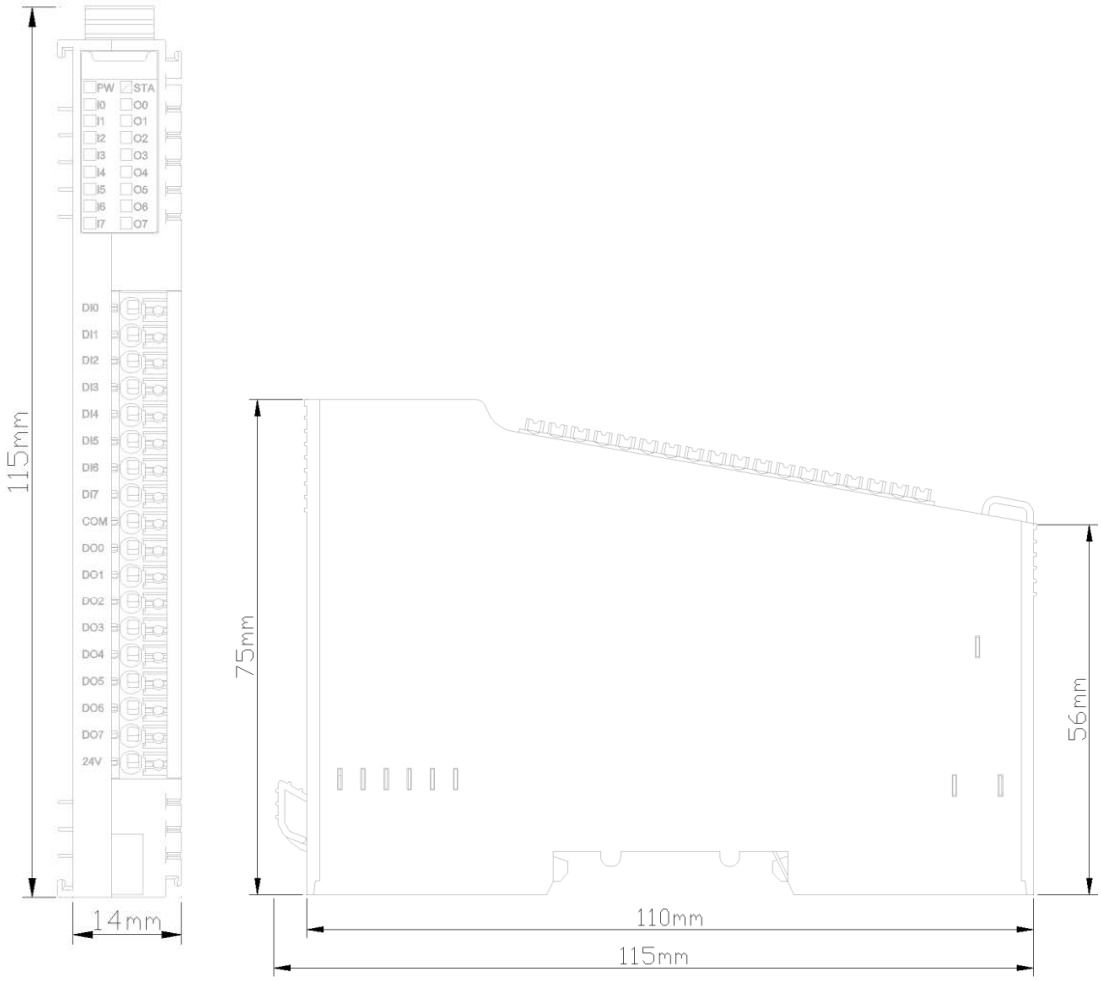

NT-7220 Power Supply Extension Module 5V/2A (requires no configuration)

1 Module features

- System Power and Field Power Extension
- System Power Output 2A@5VDC
- Field Power Extension 8A Current
- Requires no configuration and occupies no slot in configuration.

2 Technical Parameters

General parameters	
System Power	Nominal: 24Vdc, Range: 9-36Vdc Protection: overcurrent protection, anti-reverse connection protection
Internal Bus Supply Current	Max：2.0A@5VDC
Isolation	System Power to Field Power Isolation
Field Power	Power Supply：22~28V（Nominal: 24Vdc） Protection： anti-reverse connection protection
Field Power Supply Current	Max. DC 8A
Environment Specification	
Operational Temperature	-40~85℃
Operational Humidity	5%~95% RH(No Condensation)
Ingress Protection Rating	IP20

3 Hardware Interface

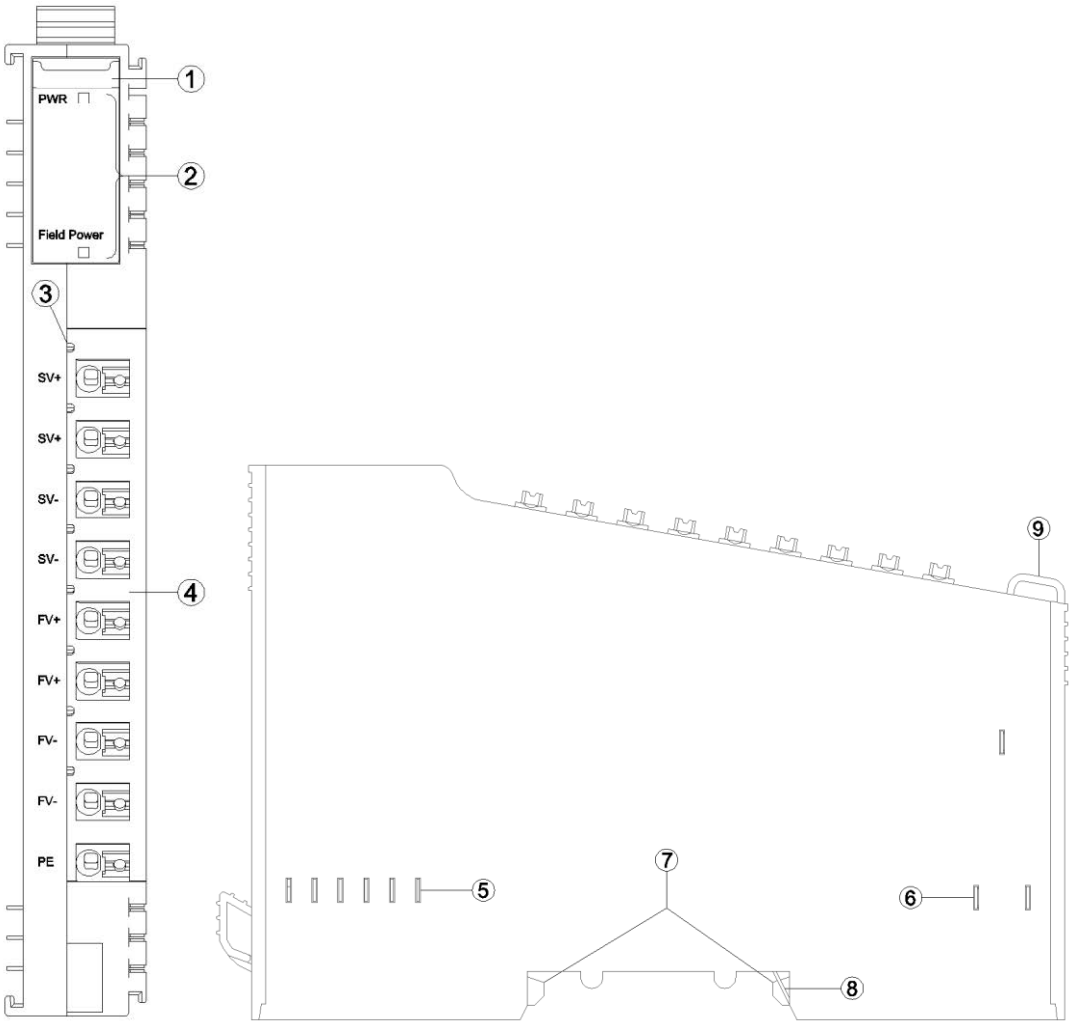

① Module Type

② State indicator

③ N/A

④ Wiring Terminal and identification

⑤ Internal Bus

⑥ Field Power

⑦ Buckle

⑧ Grounding Spring Sheet

⑨ Fixed Wiring Harness

3.1 LED indicator definition

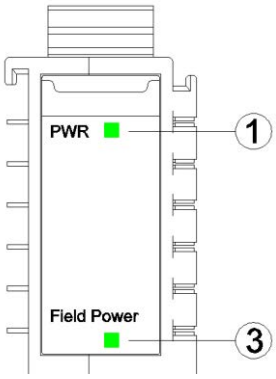

① System Power LED Indicator (green)

③ Field Power LED Indicator (green)

PWR Power LED Indicator (GREEN)	Definition
ON	The system power supply is normal.
OFF	The system power supply is failure.
Field Power LED Indicator (GREEN)	Definition
ON	The field power supply is normal.
OFF	The field power supply is failure.

3.2 Terminal definition

Terminal Number	Definition	Description
1	SV+	System Power Positive Pole
2	SV+	
3	SV-	System Power Negative Pole
4	SV-	
5	FV+	Field Power Positive Pole
6	FV+	
7	FV-	Field Power Negative Pole
8	FV-	
9	PE	System Grounded

It is recommended to use cables with cores smaller than 1mm².

The cold-pressed terminal parameters are as follows:

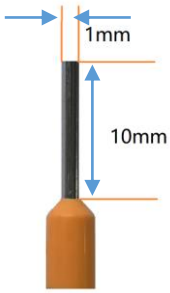

4 Wiring

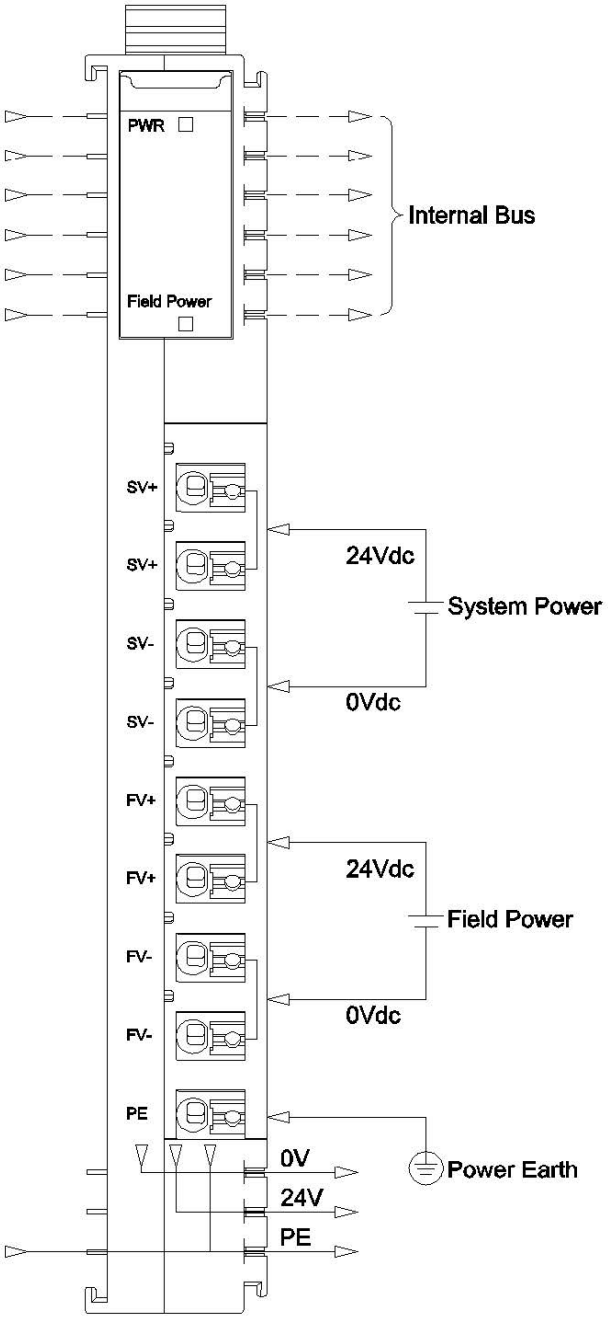
PWR
Field Power
Internal Bus
SV+
SV+
SV-
SV-
FV+
FV+
FV-
FV-
PE
24Vdc
System Power
0Vdc
24Vdc
Field Power
0Vdc
0V
24V
PE
Power Earth

5 Process data definition

No process data.

6 Configuration parameters definition

No configuration parameter.

A DIMENSION

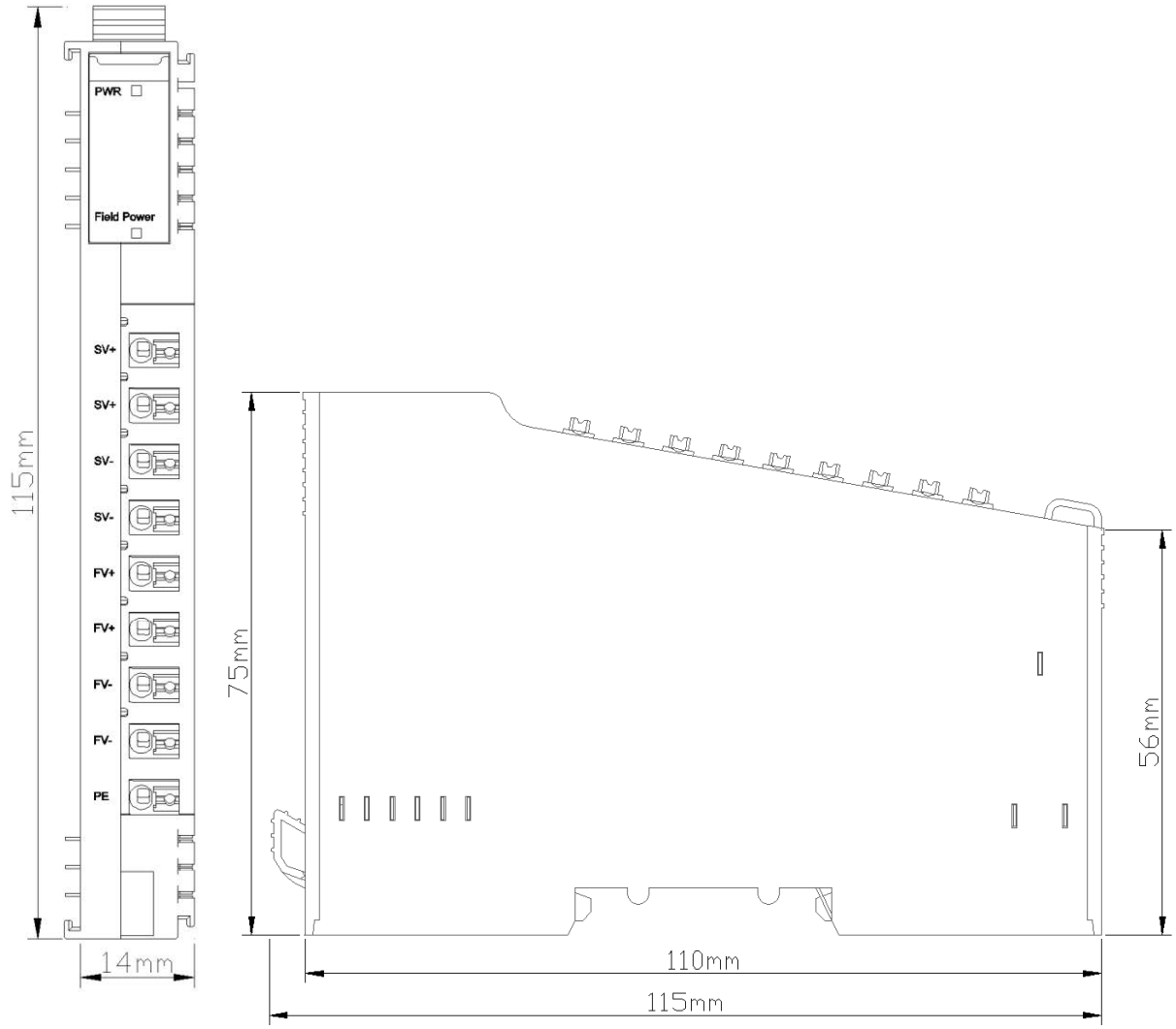

NT-7221 Power Supply Extension Module 5V/2A

1 Module features

- System Power and Field Power Extension
- System Power Output 2A@5VDC
- Field Power Extension 8A Current
- Requires configuration at IO config software

2 Technical Parameters

General parameters	
System Power	Nominal: 24Vdc, Range: 9-36Vdc Protection: overcurrent protection, anti-reverse connection protection
Module Internal Power Consumption	20mA@5VDC
Internal Bus Supply Current	Max：2.0A@5VDC
Isolation	System Power to Field Power Isolation
Field Power	Power Supply：22~28V（Nominal: 24Vdc） Protection： anti-reverse connection protection
Field Power Supply Current	Max. DC 8A
Environment Specification	
Operational Temperature	-40~85℃
Operational Humidity	5%~95% RH(No Condensation)
Ingress Protection Rating	IP20

3 Hardware Interface

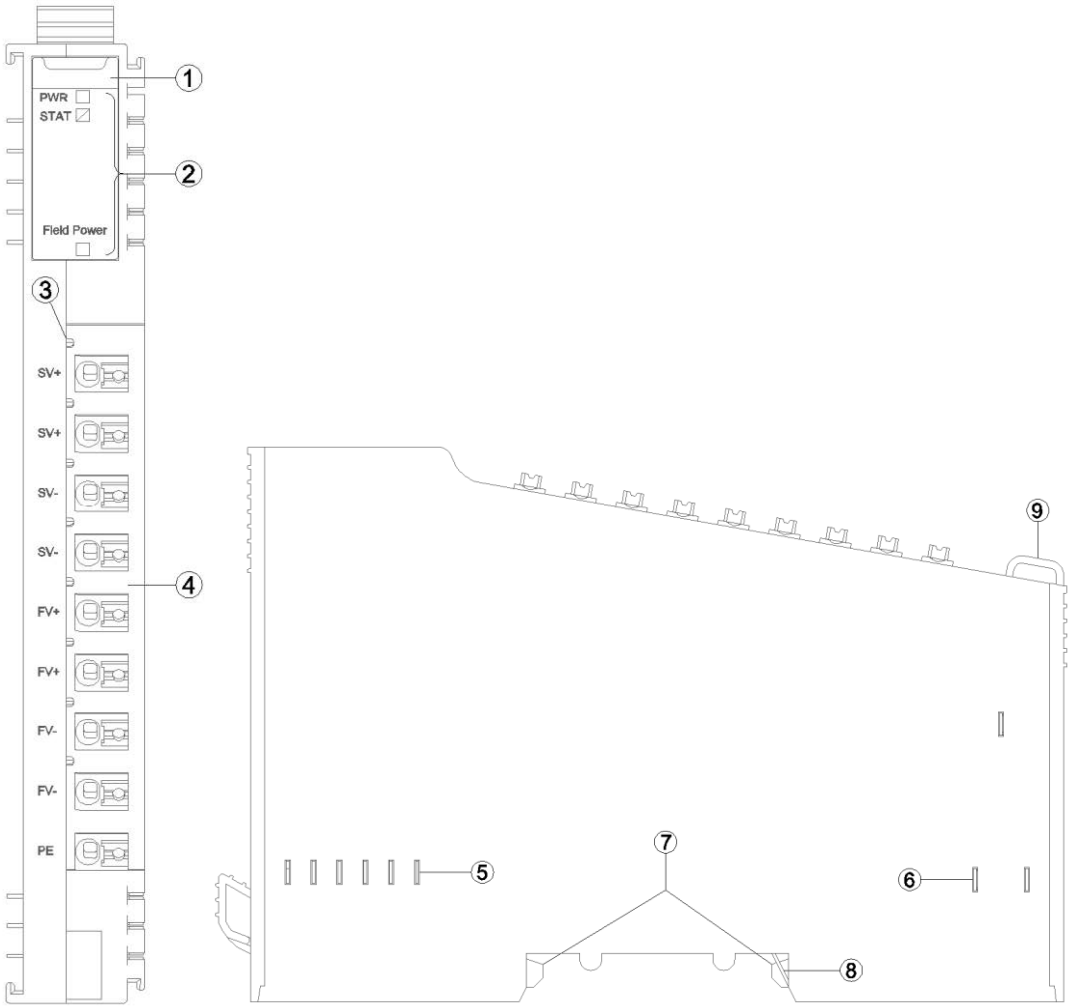

① Module Type

② State indicator

③ N/A

④ Wiring Terminal and identification

⑤ Internal Bus

⑥ Field Power

⑦ Buckle

⑧ Grounding Spring Sheet

⑨ Fixed Wiring Harness

3.1 LED indicator definition

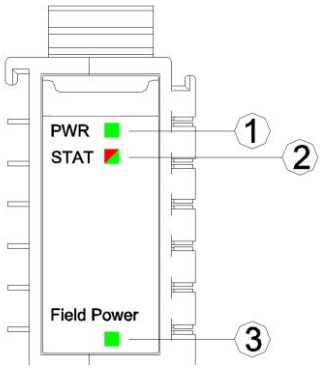

① System Power LED Indicator (green)

② Module State LED indicator (red/green)

③ Field Power LED Indicator (green)

PWR Power LED Indicator (GREEN)	Definition
ON	The system power supply is normal.
OFF	The system power supply is failure.
STAT Module State LED Indicator (Red/Green)	Definition
Green slow flash (2.5Hz)	Module internal bus is not started
Red slow flash (2.5Hz)	Module internal bus offline
ON (GREEN)	Operation normal
Flash(2.5Hz) (RED/GREEN)	Upgrading mode
Flash(10Hz) (RED/GREEN)	Firmware Update
Double Flash (RED)	Module Exception has been soft-restarted
Field Power LED Indicator (GREEN)	Definition
ON	The field power supply is normal.
OFF	The field power supply is failure.

3.2 Terminal definition

Terminal Number	Definition	Description
1	SV+	System Power Positive Pole
2	SV+	
3	SV-	System Power Negative Pole
4	SV-	
5	FV+	Field Power Positive Pole
6	FV+	
7	FV-	Field Power Negative Pole
8	FV-	
9	PE	System Grounded

It is recommended to use cables with cores smaller than 1mm².

The cold-pressed terminal parameters are as follows:

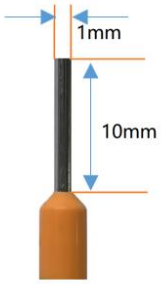

4 Wiring

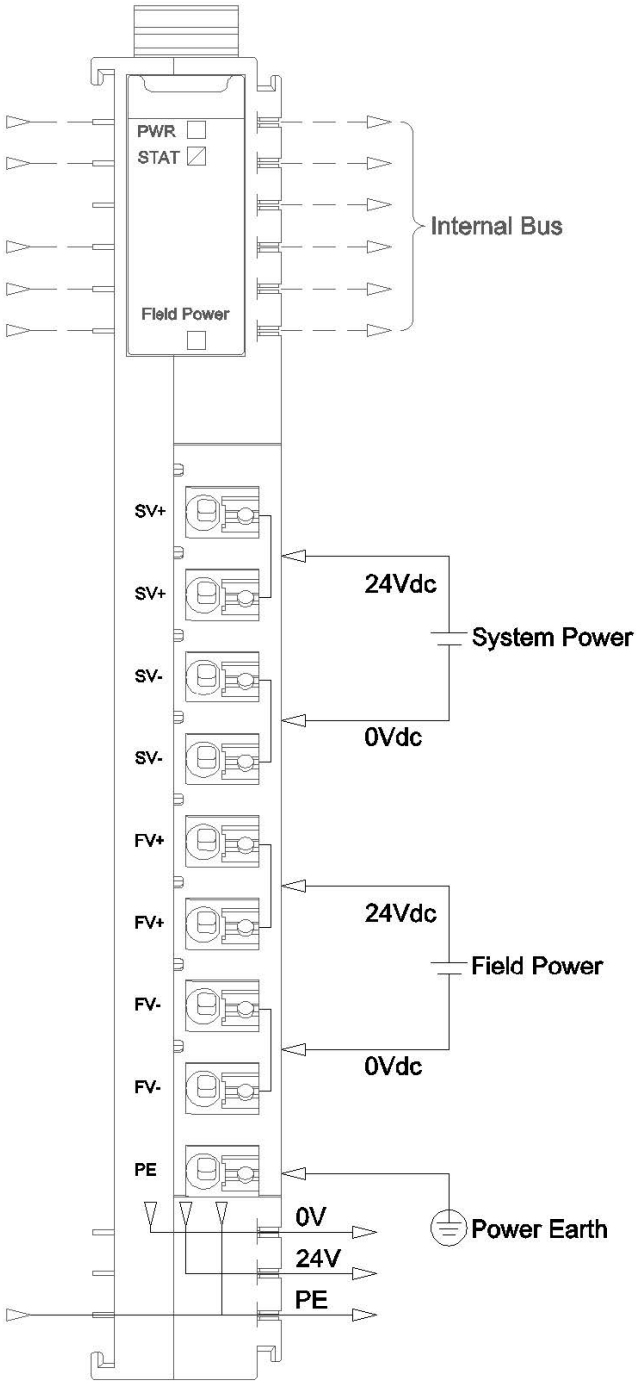
PWR
STAT
Field Power
Internal Bus
SV+
SV+
SV-
SV-
FV+
FV+
FV-
FV-
PE
24Vdc
System Power
0Vdc
24Vdc
Field Power
0Vdc
Power Earth
0V
24V
PE

5 Process data definition

No process data.

6 Configuration parameters definition

No configuration parameter.

A DIMENSION

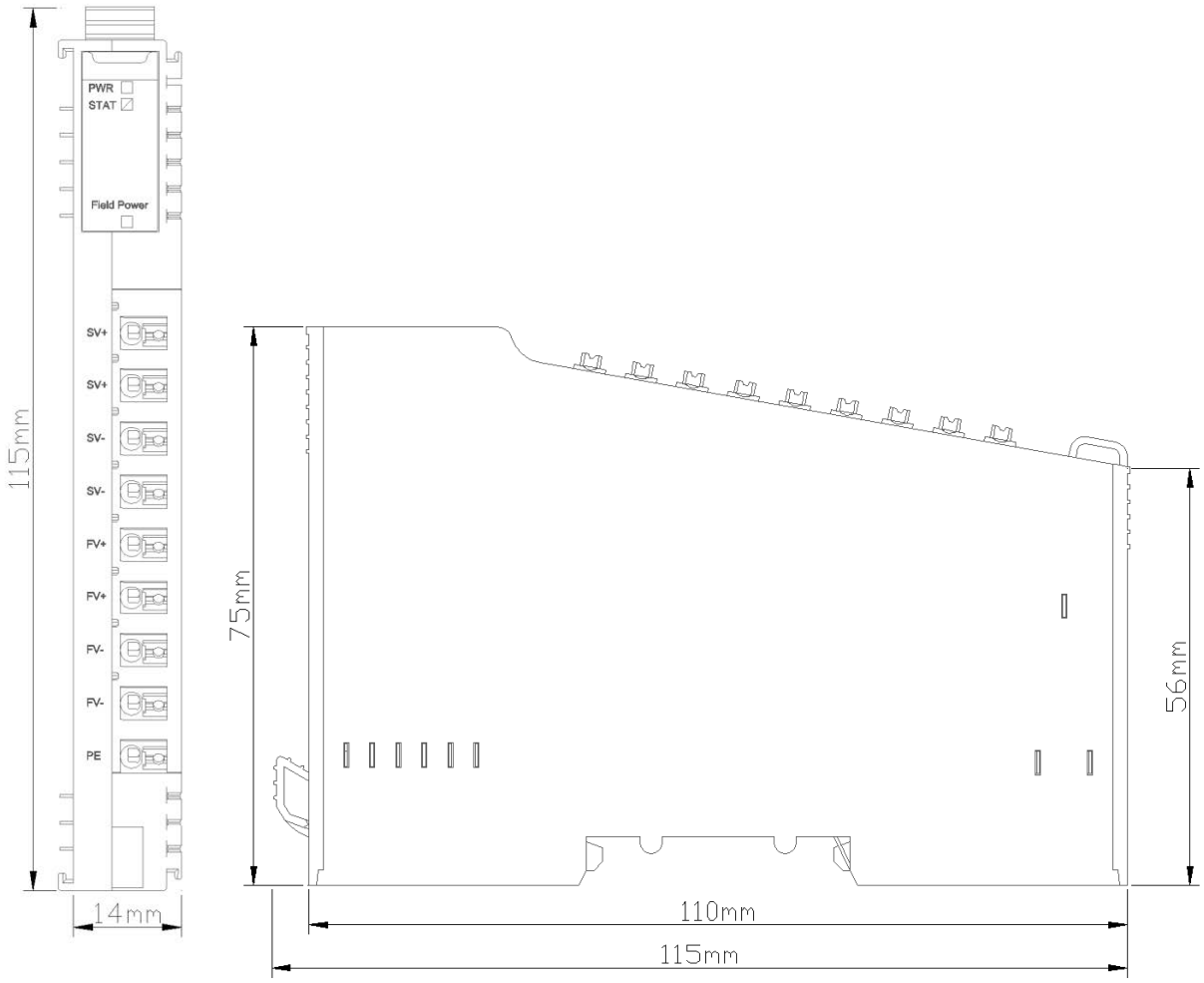

NT-730F 18 channels field power distribution module（0VDC）

1 Module features

- Support on-site power distribution, output is 0VDC.
- Support expansion of 18 channels.
- Requires no configuration and occupies no slot in configuration.

2 Technical Parameters

Environment Specification	
Operational Temperature	-40~85℃
Operational Humidity	5%~95% RH (No Condensation)
Ingress Protection Rating	IP20
Output Parameters	
Channel	18 channels 0VDC potential distribution output

3 Hardware Interface

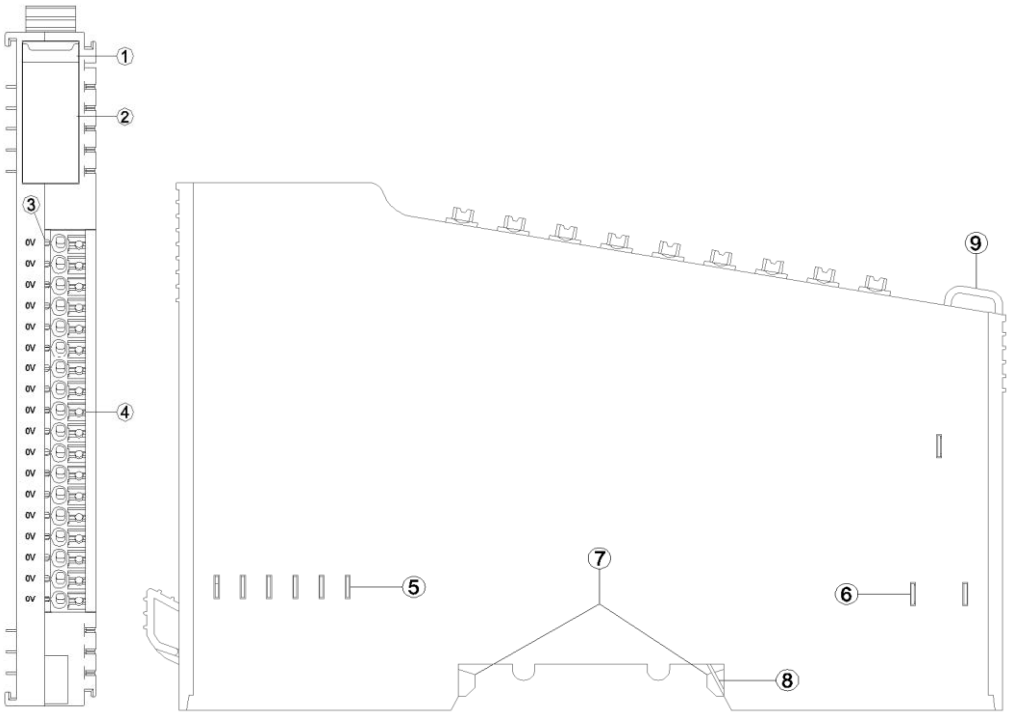

① Module Type

② N/A

③ N/A

④ Wiring Terminal and identification

⑤ Internal Bus

⑥ Field Power

⑦ Buckle

⑧ Grounding Spring Sheet

⑨ Fixed Wiring Harness

3.1 LED indicator definition

No indicator

3.2 Terminal definition

Terminal Number	Definition	Description
1	0V	0VDC output
2		
3		
4		
5		
6		
7		
8		
9		
10		
11		
12		
13		
14		
15		
16		
17		
18		

It is recommended to use cables with cores greater than 0.2mm² and smaller than 1mm².

When connecting cables (terminals)with cores, need to check and connect them according to the corresponding node serial number.

The cold-pressed terminal parameters are as follows:

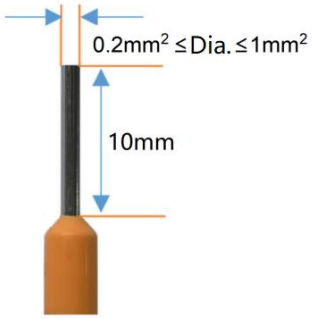

4 Wiring

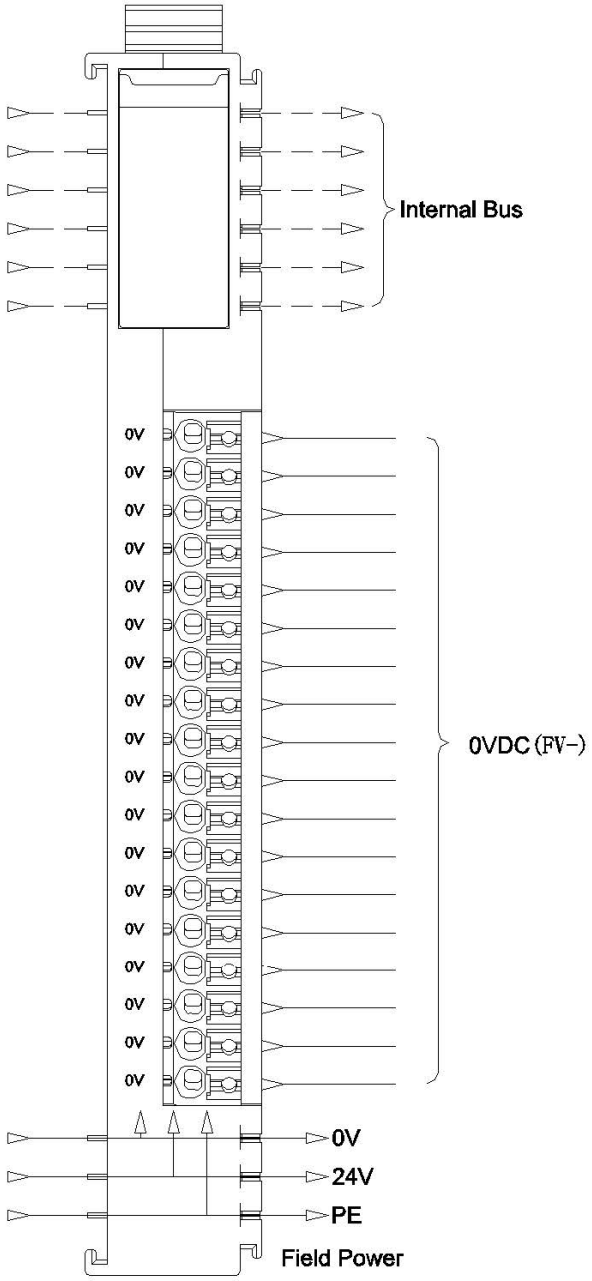

5 Process data definition

No process data.

6 Configuration parameters definition

No configuration parameter.

A DIMENSION

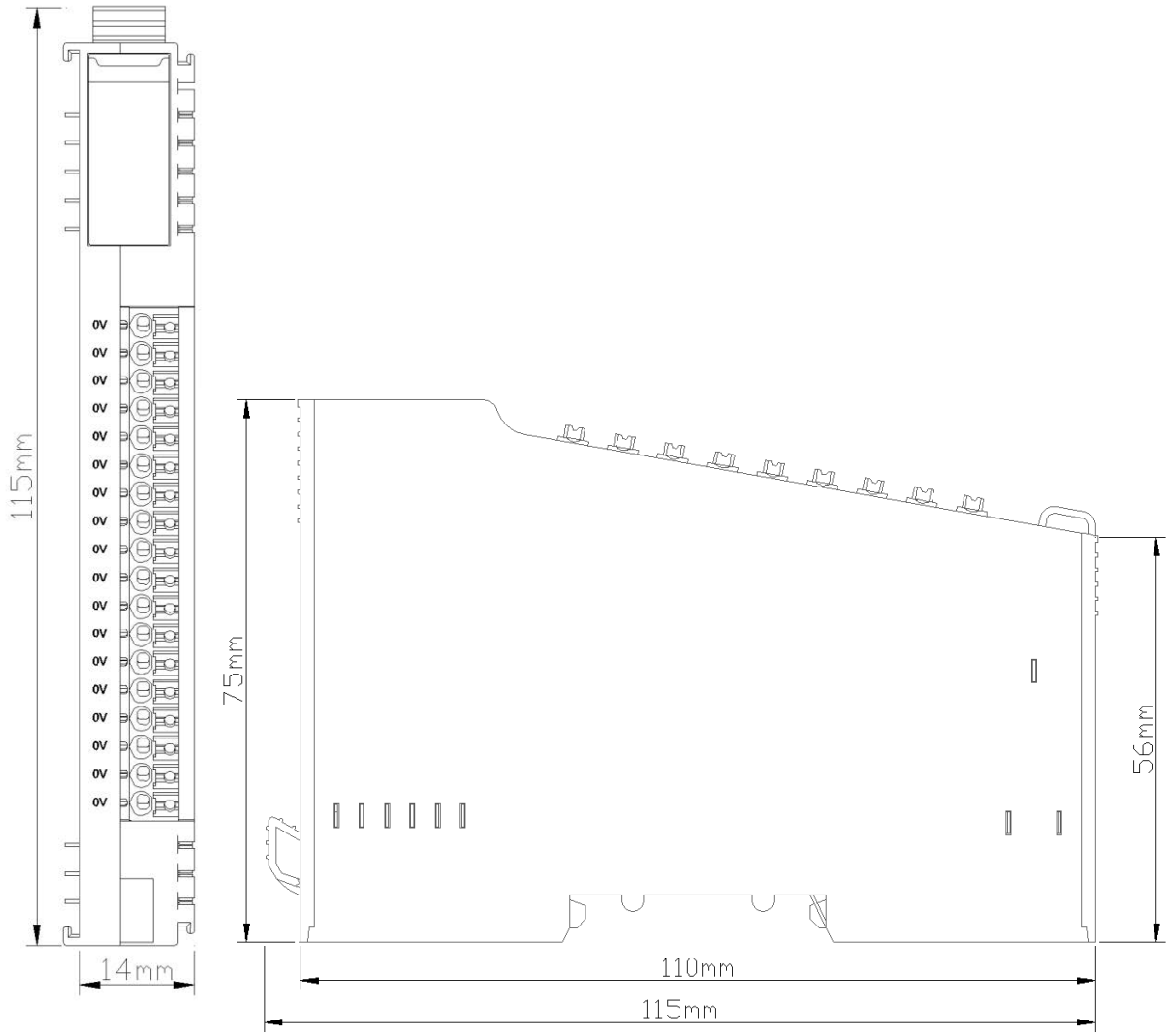

NT-731F 18 channels field power distribution module （24Vdc）

1 Module features

- Support on-site power distribution, output is 24VDC
- Support expansion of 18 channels
- Requires no configuration and occupies no slot in configuration.

2 Technical Parameters

Environment Specification	
Operational Temperature	-40~85℃
Operational Humidity	5%~95% RH (No Condensation)
Ingress Protection Rating	IP20
Output Parameters	
Channel	18 channels 24VDC potential distribution output

3 Hardware Interface

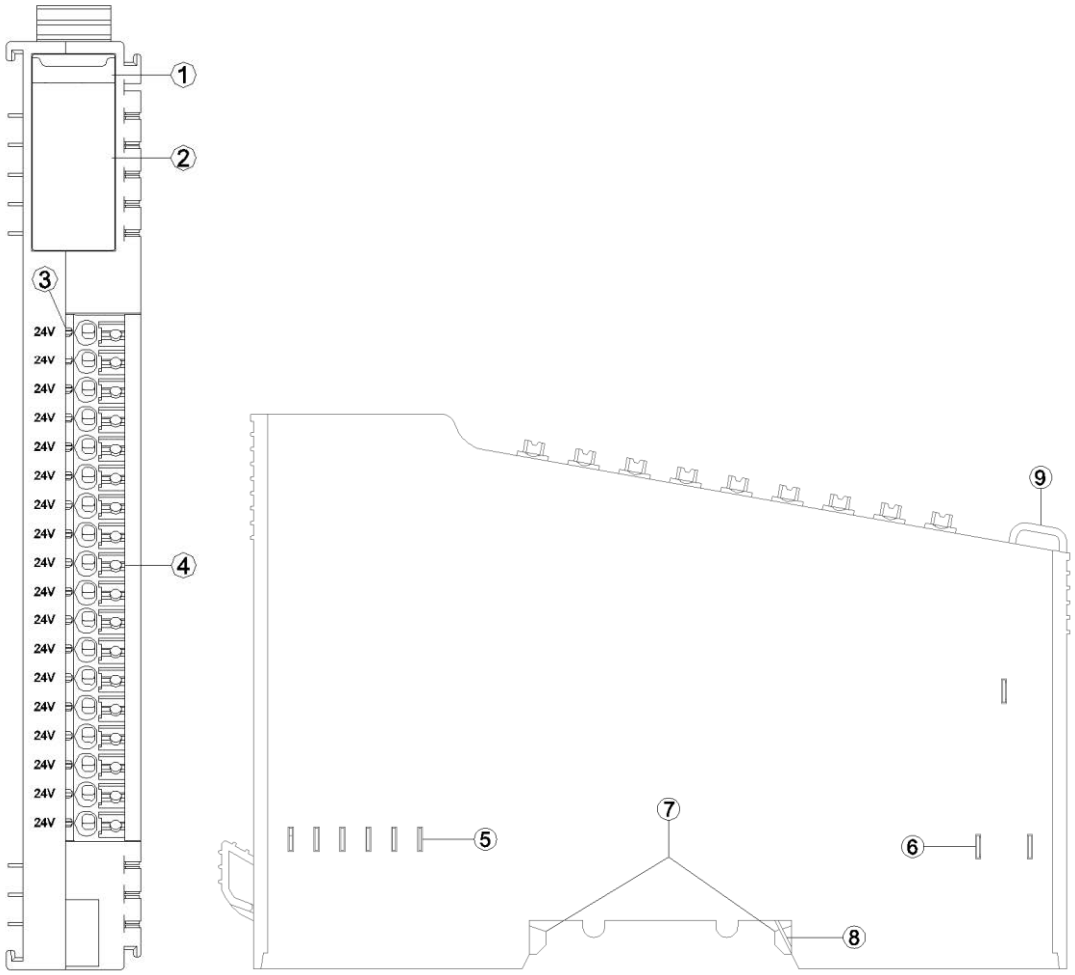

① Module Type

② N/A

③ N/A

④ Wiring Terminal and identification

⑤ Internal Bus

⑥ Field Power

⑦ Buckle

⑧ Grounding Spring Sheet

⑨ Fixed Wiring Harness

3.1 LED indictor definition

No Indicator

3.2 Terminal definition

Terminal Number	Definition	Description
1	24V	24VDC OUTPUT
2		
3		
4		
5		
6		
7		
8		
9		
10		
11		
12		
13		
14		
15		
16		
17		
18		

It is recommended to use cables with cores greater than 0.2mm² and smaller than 1mm².

When connecting cables (terminals)with cores, need to check and connect them according to the corresponding node serial number.

The cold-pressed terminal parameters are as follows:

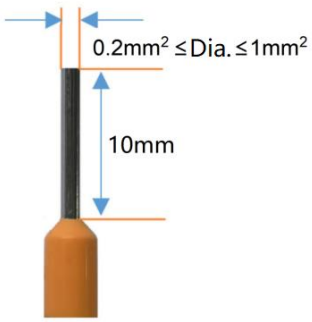

4 Wiring

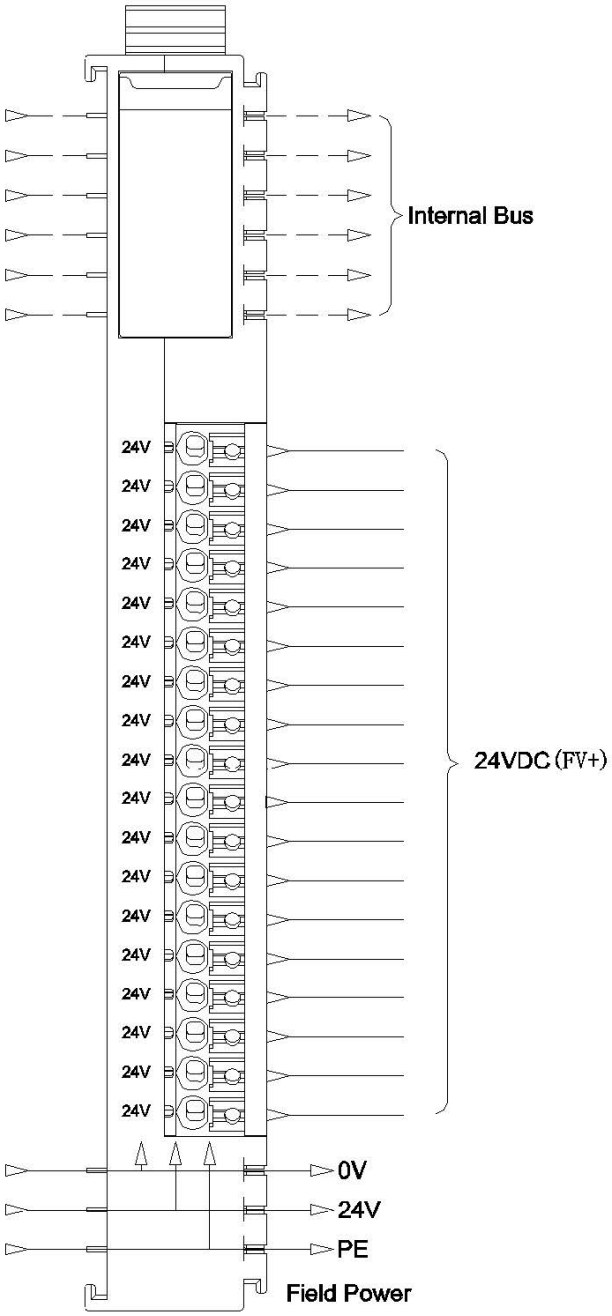

5 Process data definition

No process data.

6 Configuration parameters definition

No configuration parameter.

A DIMENSION

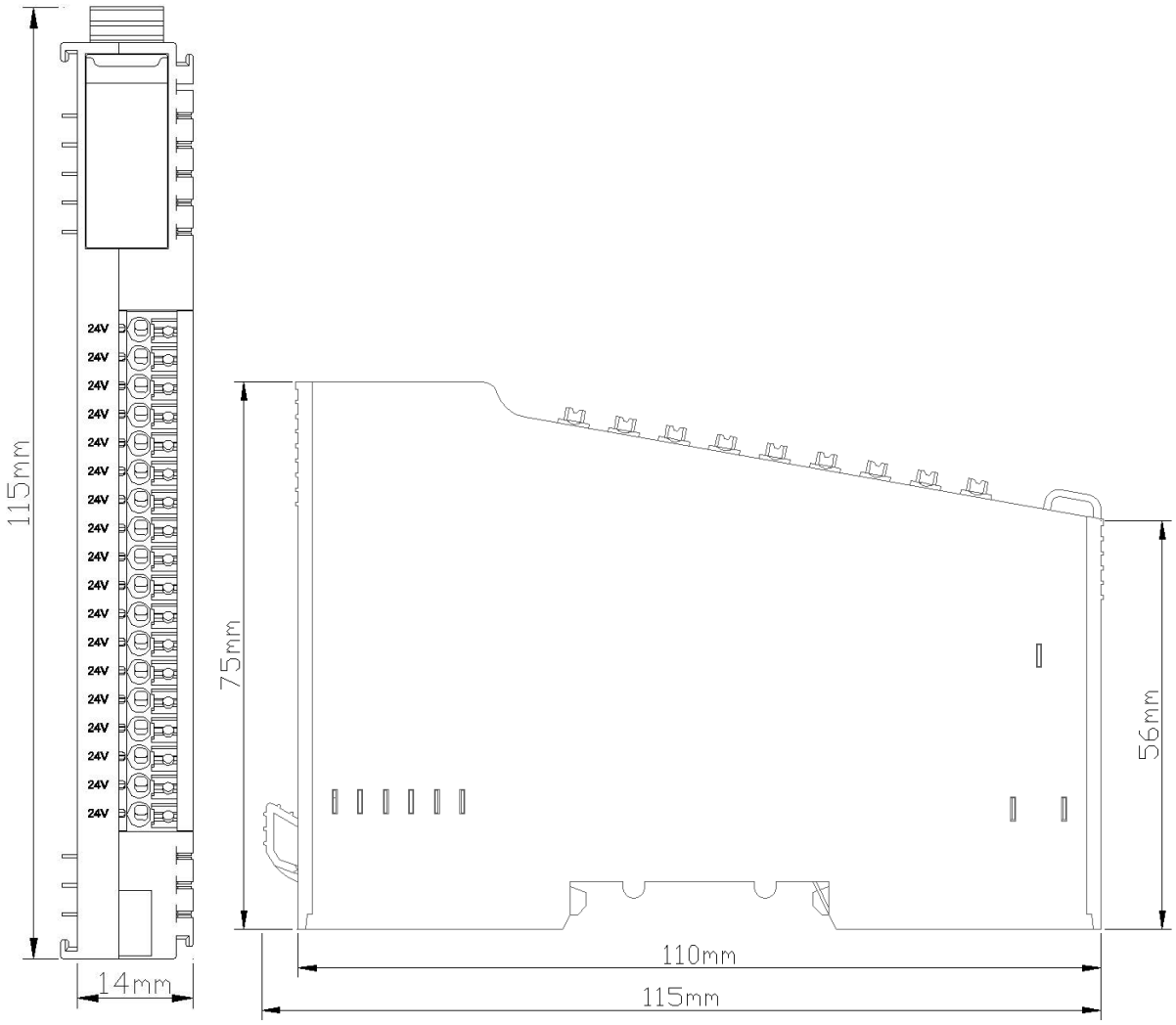

NT-732F 18 channels field power distribution module （PE）

1 Module features

- Support on-site power distribution, output is PE.
- Support expansion of 18 channels.
- Requires no configuration and occupies no slot in configuration.

2 Technical Parameters

Environment Specification	
Operational Temperature	-40~85℃
Operational Humidity	5%~95% RH (No Condensation)
Ingress Protection Rating	IP20
Output Parameters	
Channel	18-channel PE potential distribution output

3 Hardware Interface

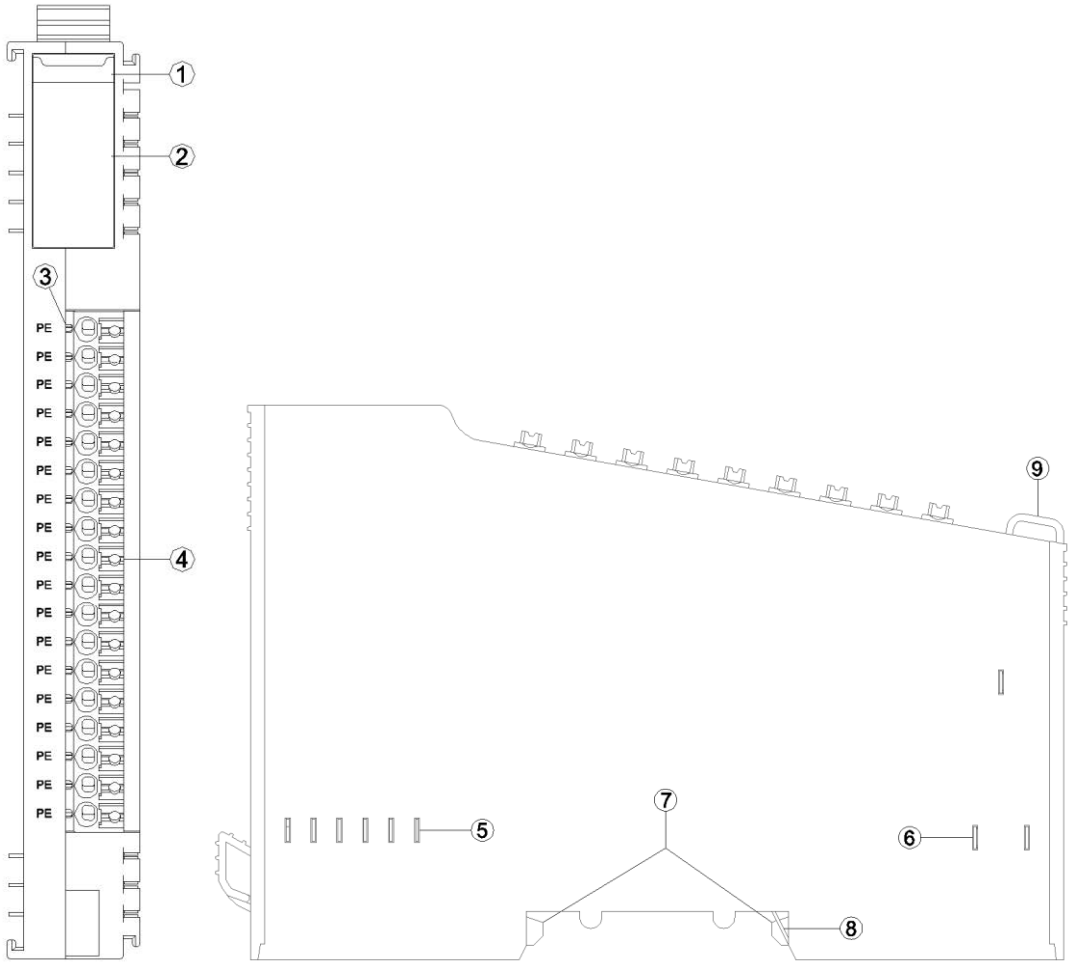

① Module Type

② N/A

③ N/A

④ Wiring Terminal and identification

⑤ Internal Bus

⑥ Field Power

⑦ Buckle

⑧ Grounding Spring Sheet

⑨ Fixed Wiring Harness

3.1 LED indictor definition

No Indicator

3.2 Terminal definition

Terminal Number	Definition	Description
1	PE	PE output
2		
3		
4		
5		
6		
7		
8		
9		
10		
11		
12		
13		
14		
15		
16		
17		
18		

It is recommended to use cables with cores greater than 0.2mm² and smaller than 1mm².

When connecting cables (terminals)with cores, need to check and connect them according to the corresponding node serial number.

The cold-pressed terminal parameters are as follows:

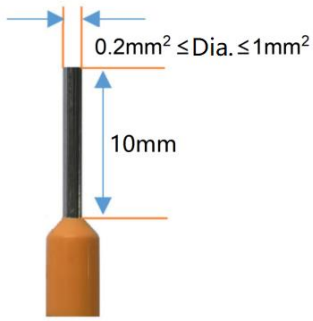

4 Wiring

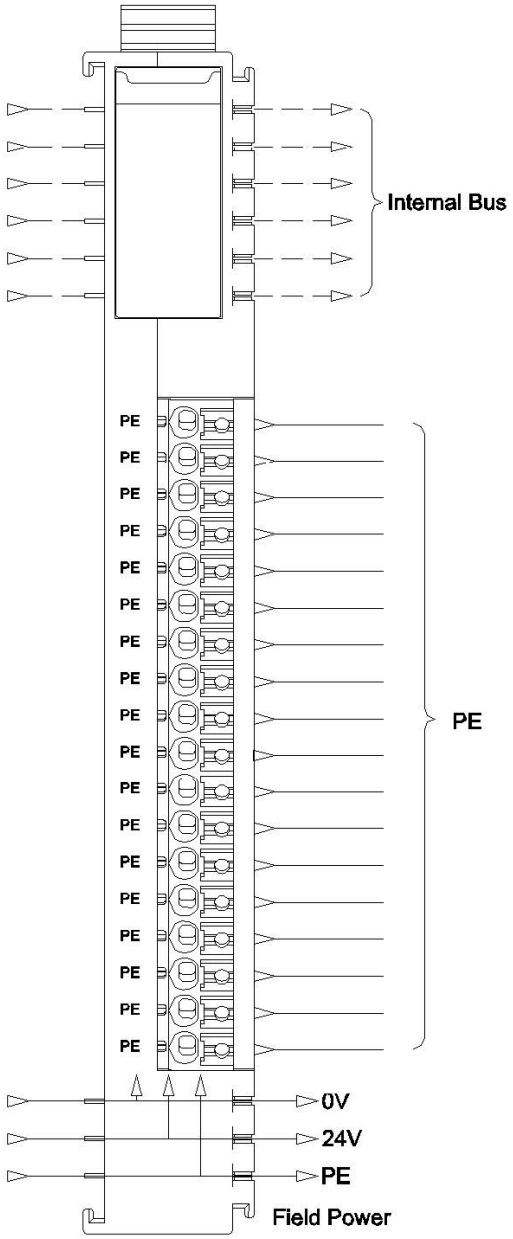
Internal Bus
PE
PE
PE
PE
PE
PE
PE
PE
PE
PE
PE
PE
PE
PE
PE
PE
PE
PE
PE
0V
24V
PE
Field Power

5 Process data definition

No process data.

6 Configuration parameters definition

No configuration parameter.

A DIMENSION

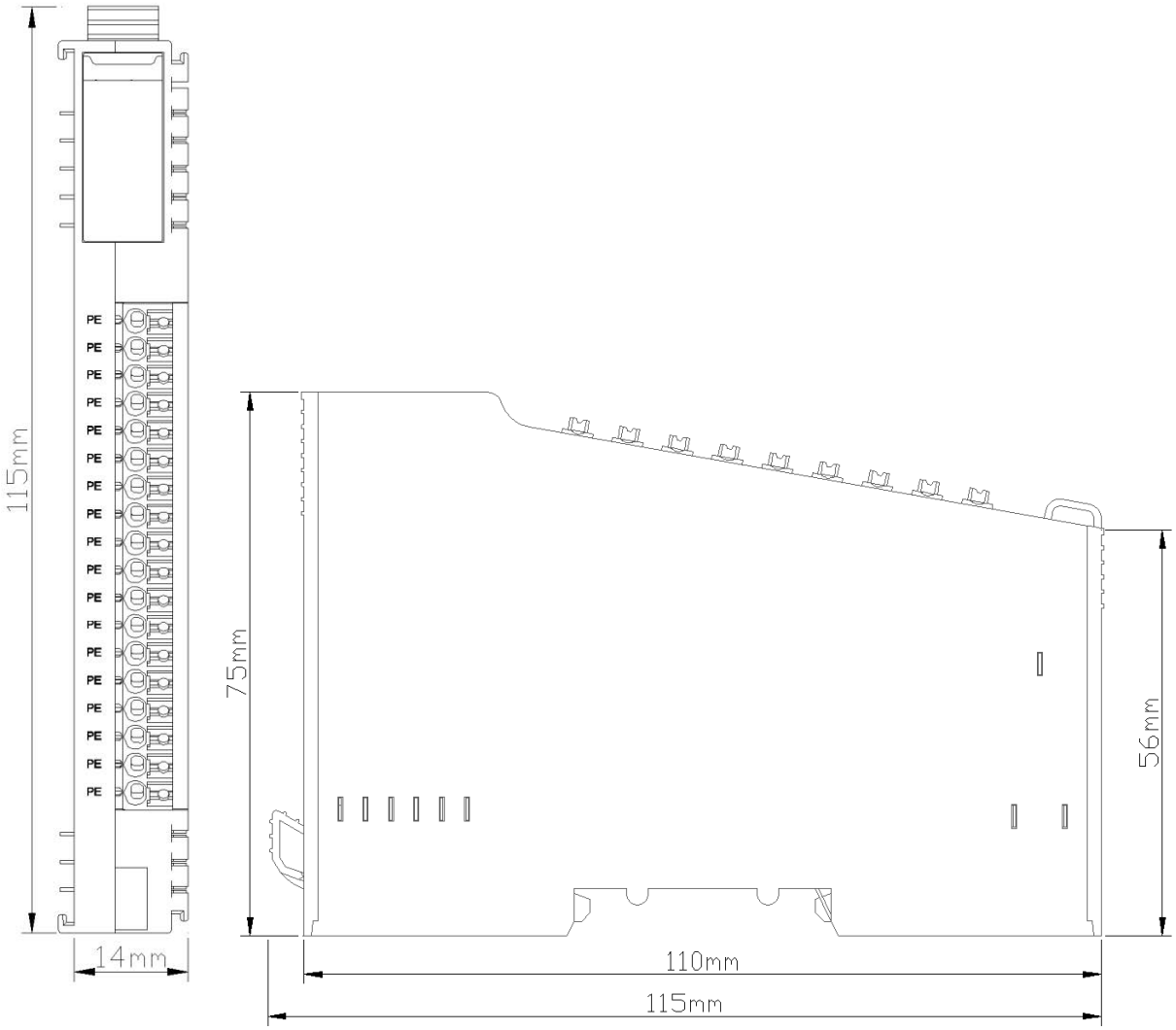

NT-7339 18 channels field power distribution module （24VDC/0VDC）

1 Module features

- Support on-site power distribution, output is 24VDC/0VDC
- Support expansion of 18 channels ,9 channels of 24VDC ,9 channels of 0VDC.
- Requires no configuration and occupies no slot in configuration.

2 Technical Parameters

Environment Specification	
Operational Temperature	-40~85℃
Operational Humidity	5%~95% RH (No Condensation)
Ingress Protection Rating	IP20
Output Parameters	
Channel	9 channels 24VDC potential distribution output 9 channels 0VDC potential distribution output

3 Hardware Interface

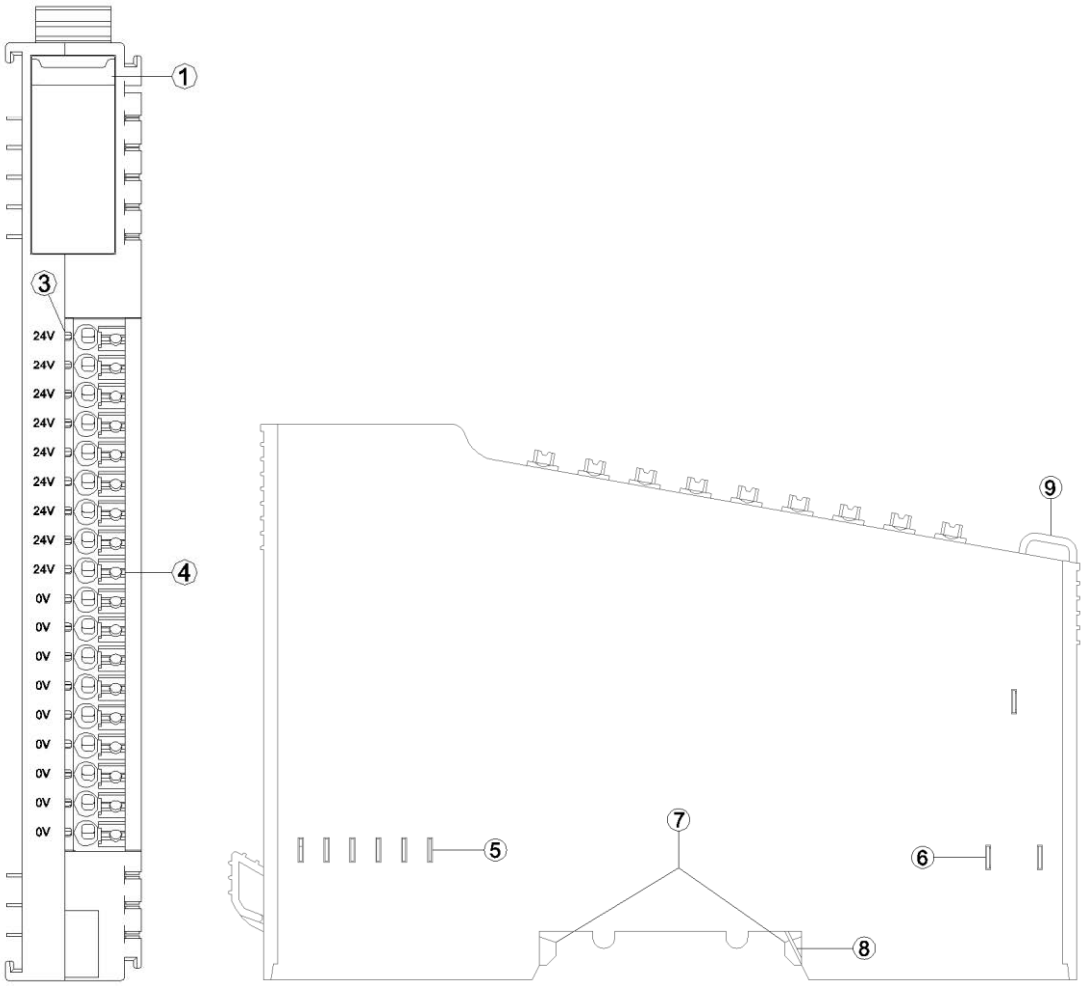

① Module Type

② N/A

③ N/A

④ Wiring Terminal and identification

⑤ Internal Bus

⑥ Field Power

⑦ Buckle

⑧ Grounding Spring Sheet

⑨ Fixed Wiring Harness

3.1 LED indictor definition

NO indicator

3.2 Terminal definition

Terminal Number	Definition	Specification
1	24Vdc	24Vdc output
2		
3		
4		
5		
6		
7		
8		
9		
10	0Vdc	0Vdc output
11		
12		
13		
14		
15		
16		
17		
18		

It is recommended to use cables with cores greater than 0.2mm² and smaller than 1mm².

When connecting cables (terminals)with cores, need to check and connect them according to the corresponding node serial number.

The cold-pressed terminal parameters are as follows:

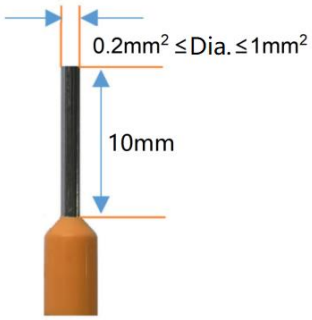

4 Wiring

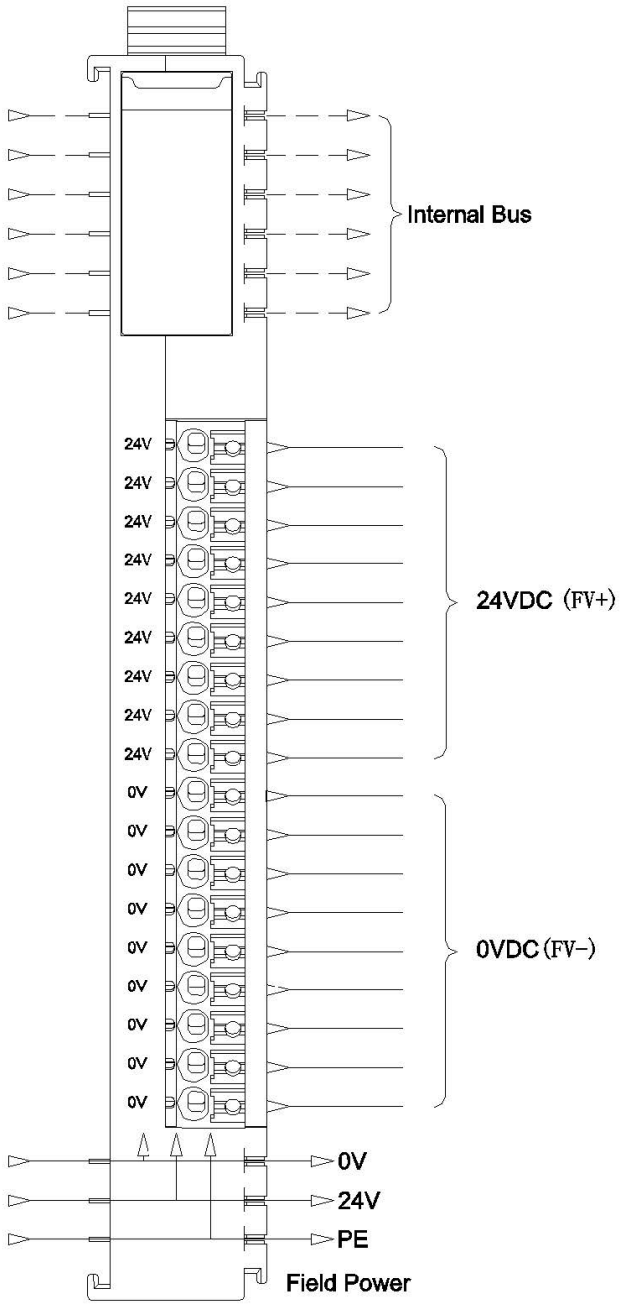
Internal Bus
24V
24V
24V
24V
24V
24V
24V
24V
24V
24VDC (FV+)
0V
0V
0V
0V
0V
0V
0V
0V
0V
0VDC (FV−)
0V
24V
PE
Field Power

5 Process data definition

No process data.

6 Configuration parameters definition

No configuration parameter.

A DIMENSION

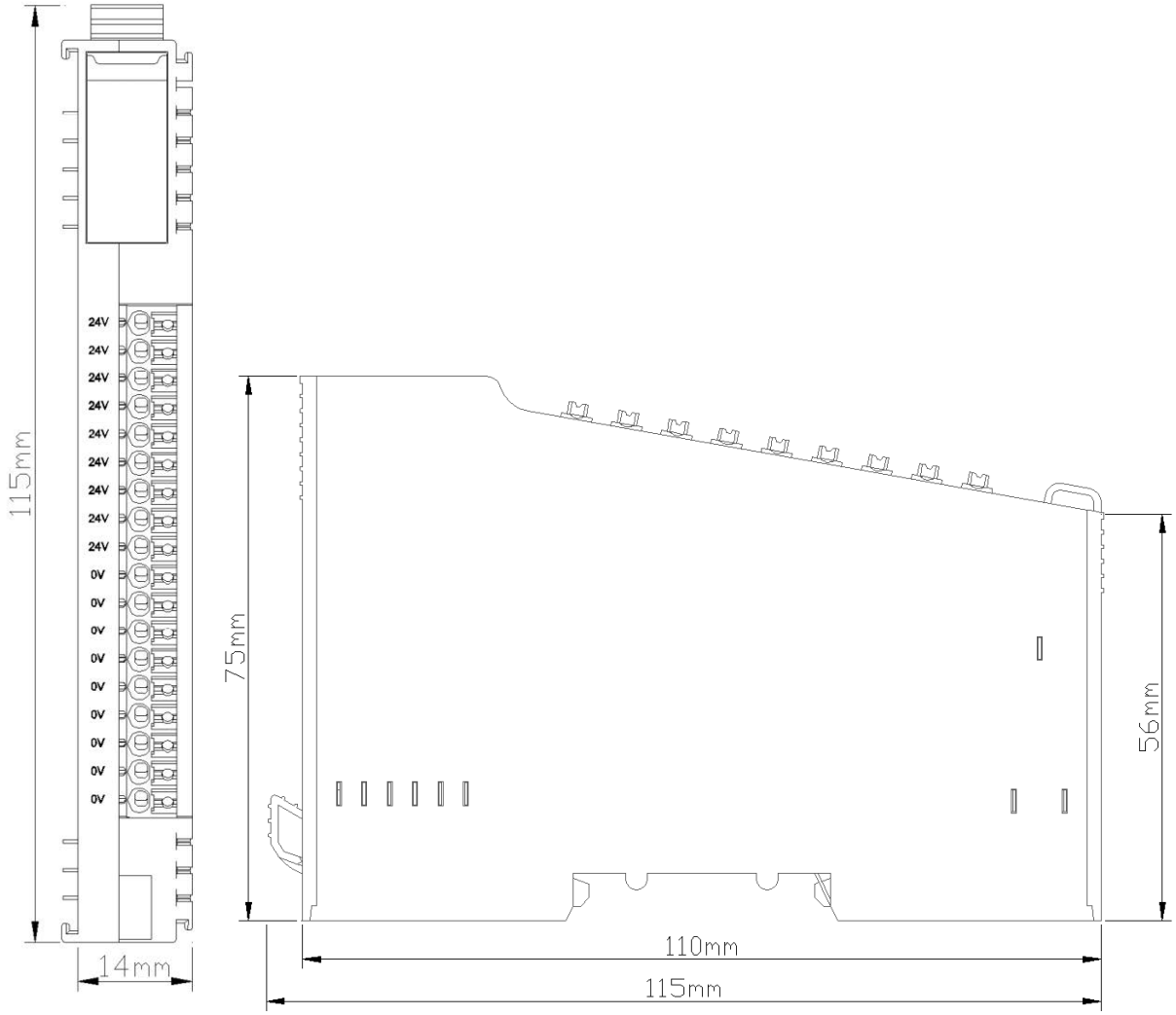

NT-7346 18 channels field power distribution module （24VDC/0VDC/PE）

1 Module features

- Support on-site power distribution, output is 24VDC/0VDC.
- Support expansion of 18 channels ,6 channels of 24VDC ,6 channels of 0VDC ,6 channels of PE.
- Requires no configuration and occupies no slot in configuration.

2 Technical Parameters

Environment Specification	
Operational Temperature	-40~85℃
Operational Humidity	5%~95% RH (No Condensation)
Ingress Protection Rating	IP20
Output Parameters	
Channel	6 channels 24VDC potential distribution output 6 channels 0VDC potential distribution output 6 channels PE potential distribution output

3 Hardware Interface

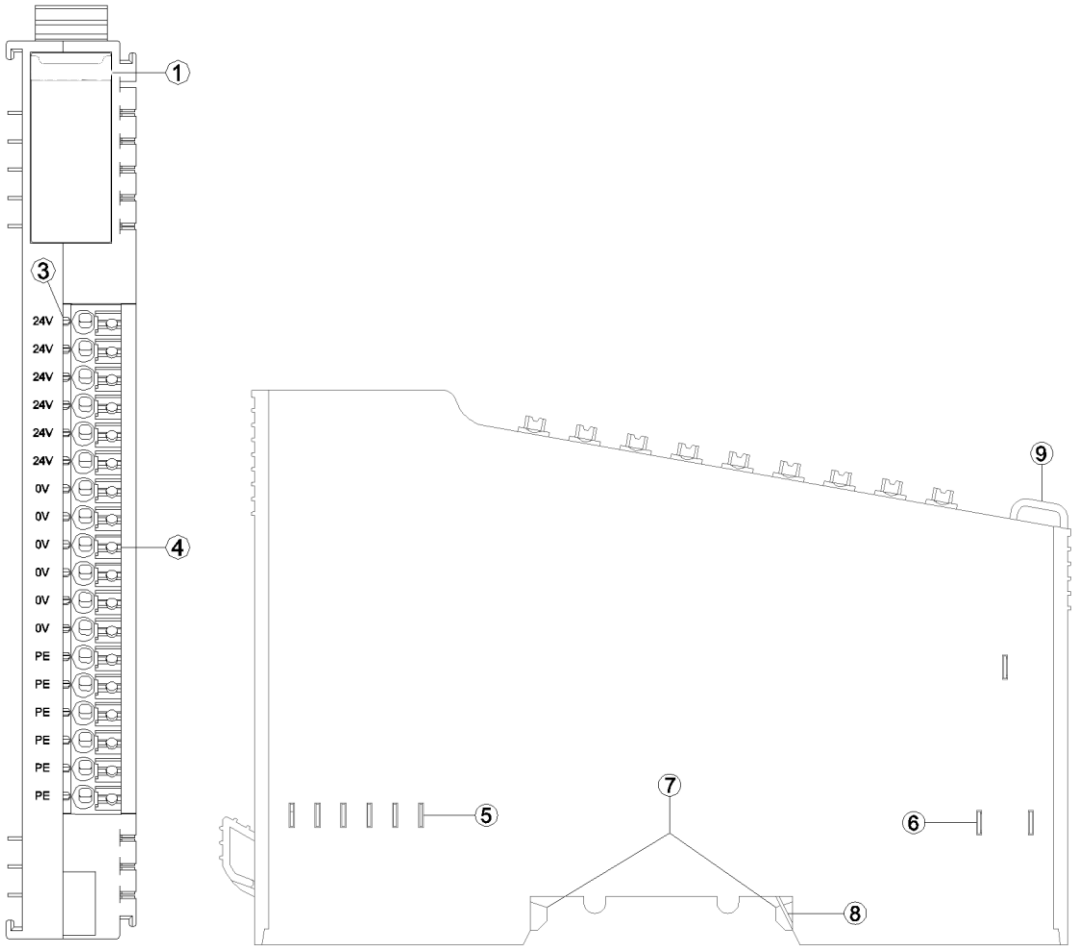

① Module Type

② N/A

③ N/A

④ Wiring Terminal and identification

⑤ Internal Bus

⑥ Field Power

⑦ Buckle

⑧ Grounding Spring Sheet

⑩ Fixed Wiring Harness

3.1 LED indictor definition

No indicator

3.2 Terminal definition

Terminal Number	definition	Specification
1	24Vdc	24Vdc output
2		
3		
4		
5		
6		
7	0Vdc	0Vdc output
8		
9		
10		
11		
12		
13	PE	PE output
14		
15		
16		
17		
18		

It is recommended to use cables with cores greater than 0.2mm² and smaller than 1mm².

When connecting cables (terminals)with cores, need to check and connect them according to the corresponding node serial number.

The cold-pressed terminal parameters are as follows:

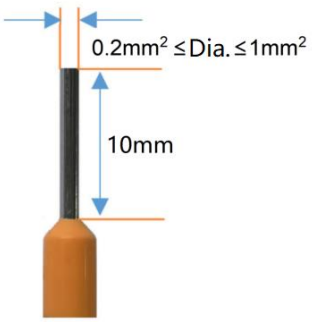

4 Wiring

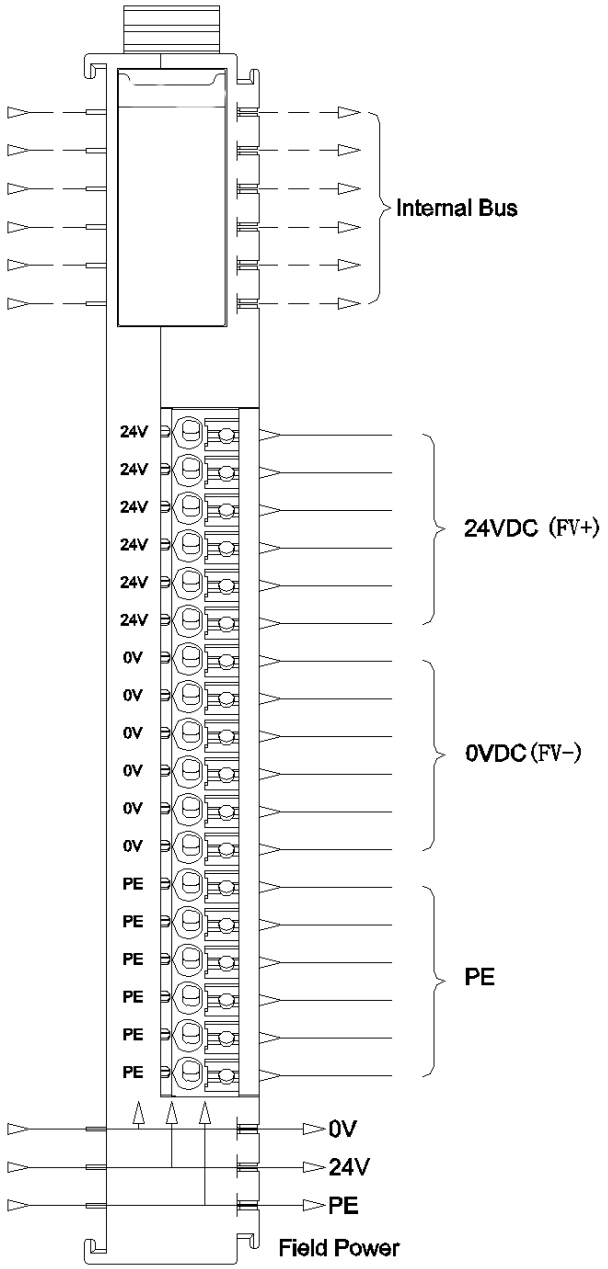
Internal Bus
24V
24V
24V
24V
24V
24V
0V
0V
0V
0V
0V
0V
PE
PE
PE
PE
PE
PE
24VDC (FV+)
0VDC (FV−)
PE
0V
24V
PE
Field Power

5 Process data definition

No process data.

6 Configuration parameters definition

No configuration parameter.

A DIMENSION

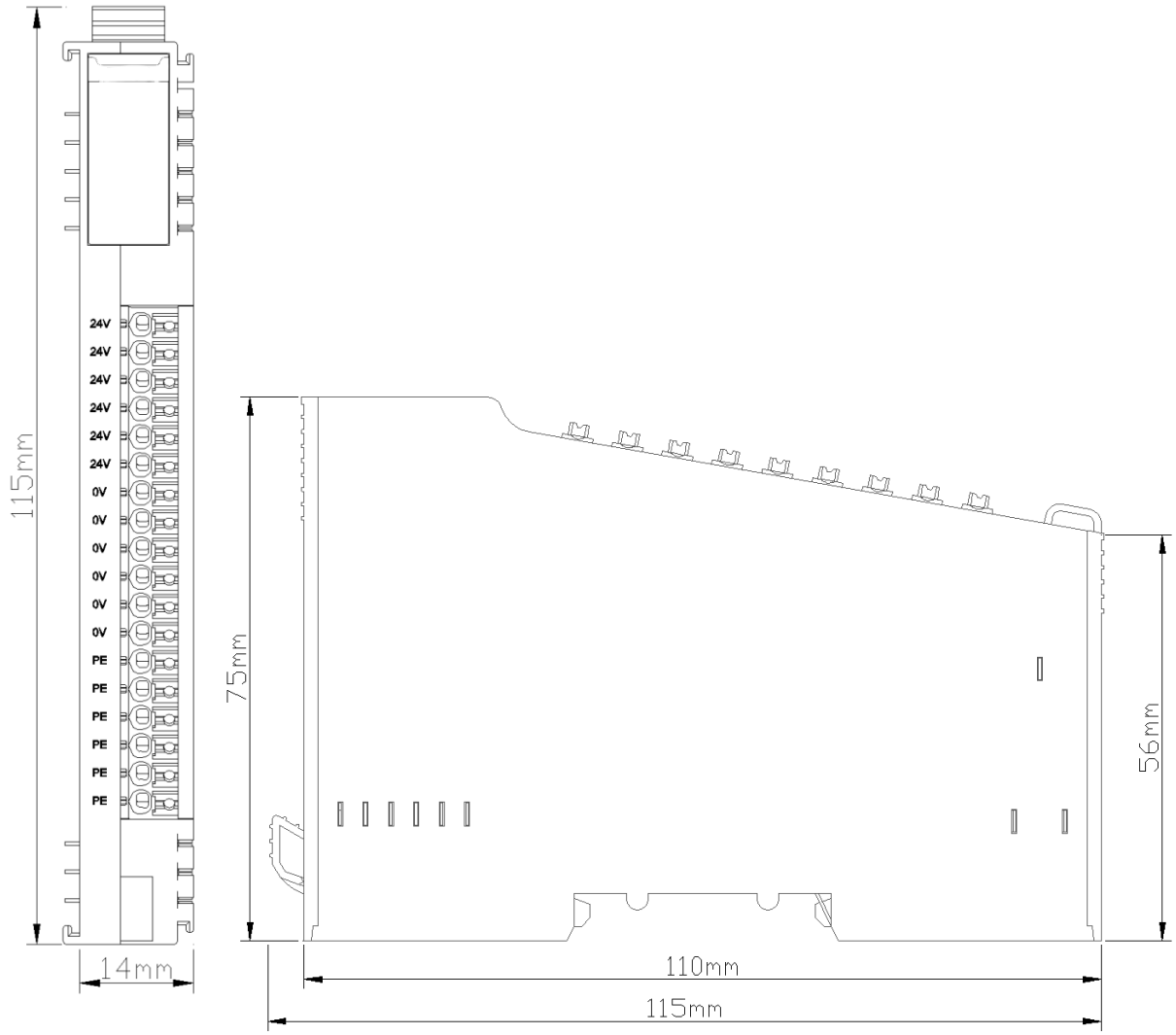

4 IO-Config configuration software

1 Software introduction

IO Config configuration software is use to config Remote IO products, which could realize the module functions of parameter uploading and downloading, process data monitoring, data address table view, device search, firmware upgrade, etc.

Note: when using IO-Config to configure the software, the serial port supports all the protocol adapters for parameter uploading, configuration parameter modification, online monitoring, etc. The Ethernet port only supports the Modbus TCP adapter (ND-8031) for parameter uploading, configuration parameter modification, online monitoring, etc.

The serial MicroUSB cable is required the function of data transmission and power supply. Some mobile USB cable is only with the power supply function, and no data transmission function, so it could not be used for adapter parameters uploading and downloading.

2 Offline configurations

When the device is disconnected to the software, the network adapter and IO module could be preselected according to the user actual module needs, and the software will automatically generate the data address mapping table.

The offline mode is mainly designed **for Modbus adapter,** and the address in the address mapping table is the access address of IO module data. For other protocol adapter, the IO address of the device could be automatically generated after configured in the configuration software of the host station system.

In offline mode, adding module manually to view the address table is as the below steps:

1. Find the installation package, click install IO Config software, and open IO Config

configuration software after installation.

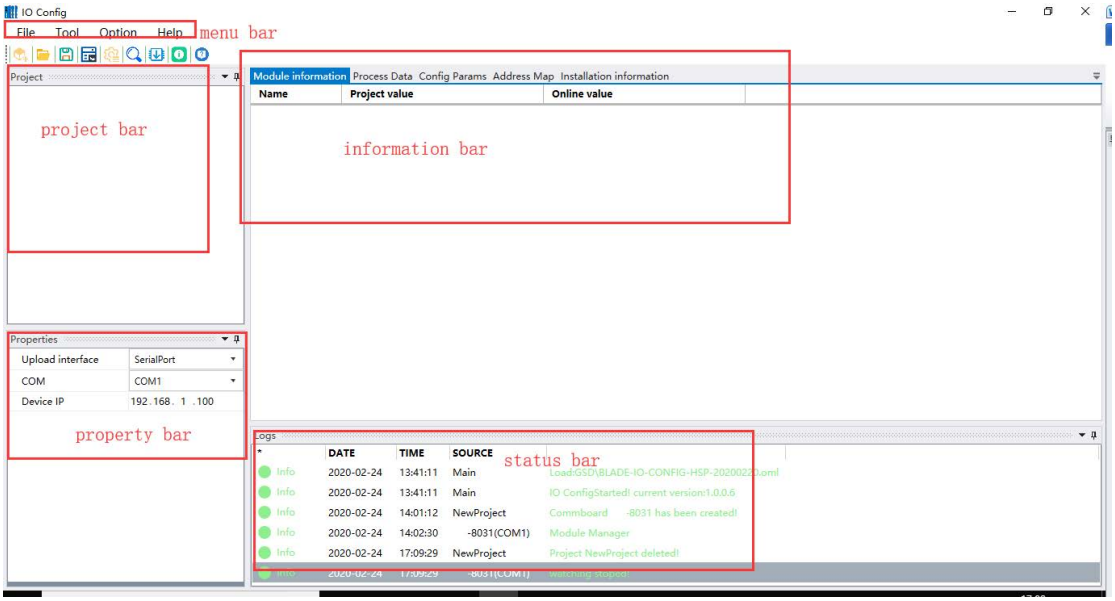

2. lick File→Project→New Project in the menu bar, or click the shortcut key or right-click Project→New Project in the project bar, and fill in the project name.

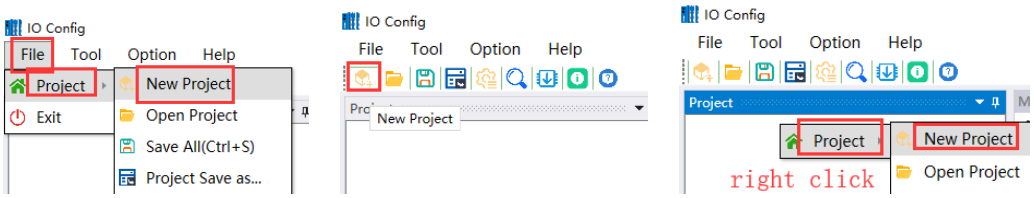

3. ight-click the NewProject Module in the project bar, and select ND-8031 In the pop-up window, then select one network port or serial port (if selecting serial port and it needs to select serial port number) and click OK.

Note: All network adapter modules could connect to the configuration software for debugging through the serial port. Only MODBUS TCP adapter can connect to the configuration software for debugging both through the Ethernet port and serial port.

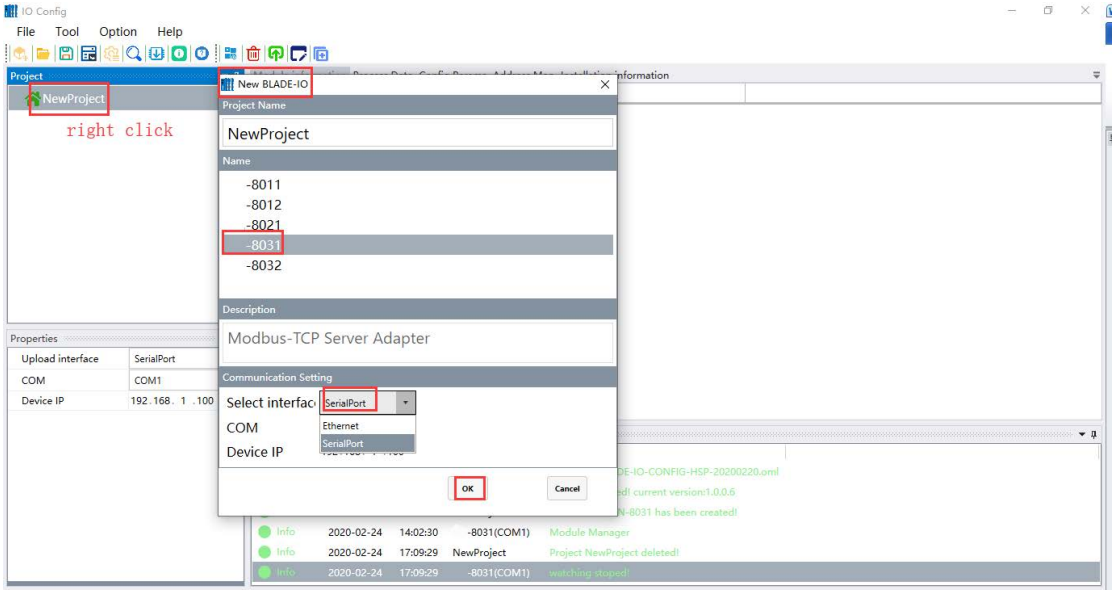

4. ight-click ND-8031→click Module Manager, Double-click to select the detailed IO module that will hang with CN8031 in the pop-up window, and click OK.

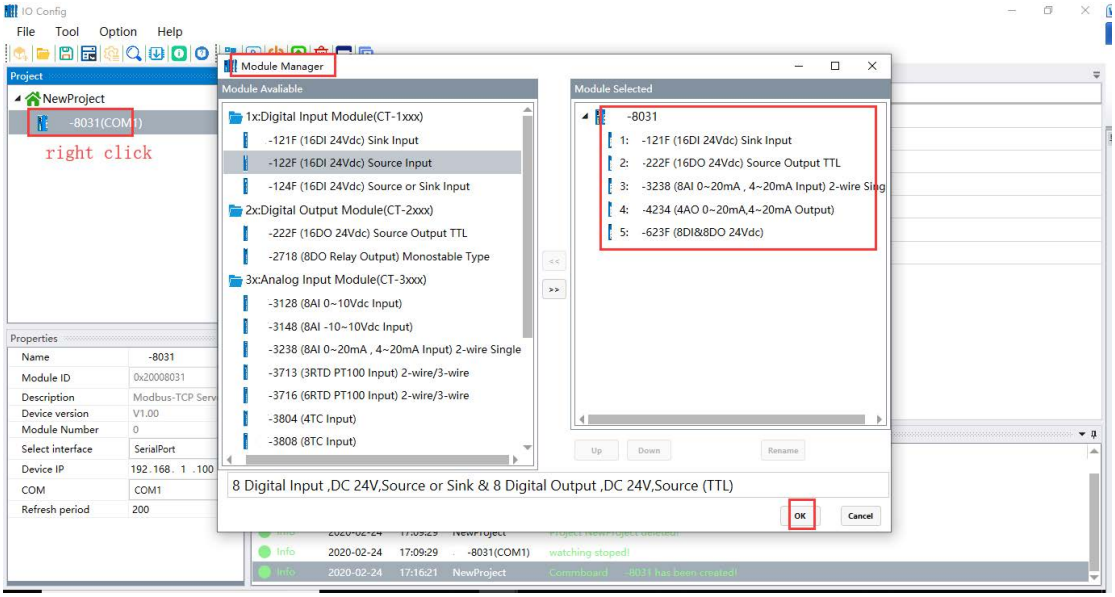

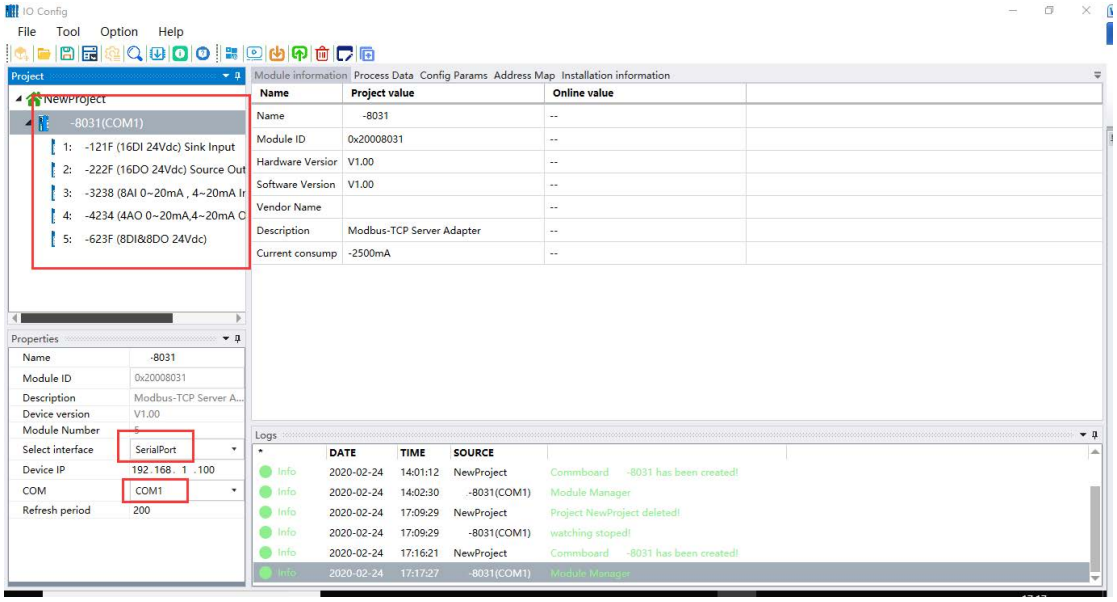

Module manually adding supports shortcut keys "Ctrl C", "Ctrl V" and "Delete" for copy, paste and delete IO module. Select ND-8031 and click the shortcut "Ctrl S" to save the configuration project.

5. lick Basic Information, Process Data, Configuration Parameters, Address Table and Installation Information in the information bar to view IO module information.

In Basic Information interface, you can view the communication protocol and version information of the current adapter module, and the module description and version information of the IO module.

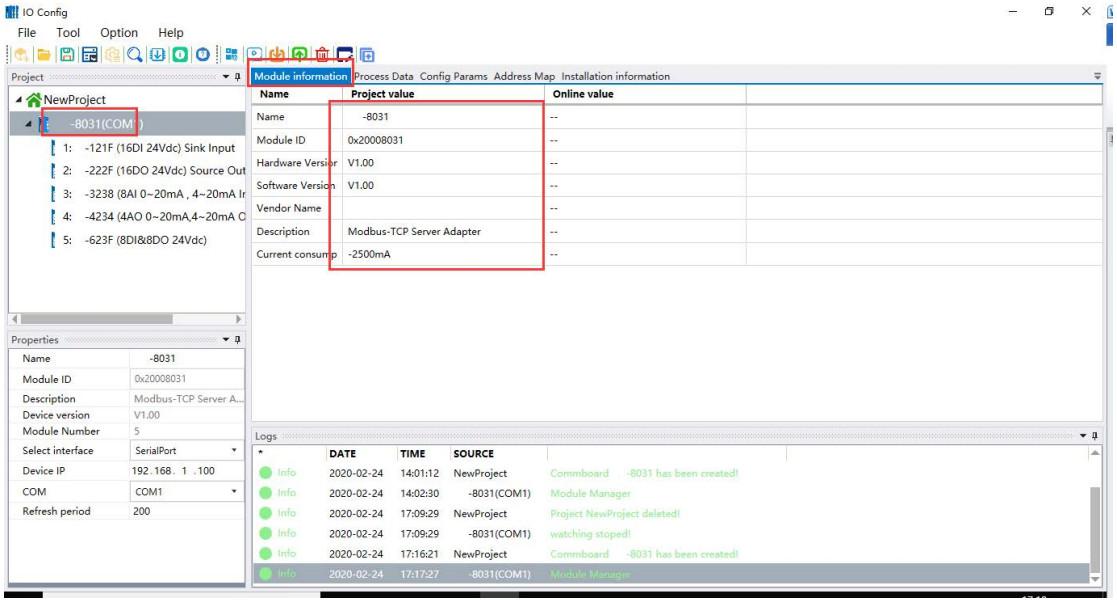

In Process Data interface, you can view the data type of the IO module, as well as the online monitoring value of the input data, and the online monitoring value and current value of the output data.

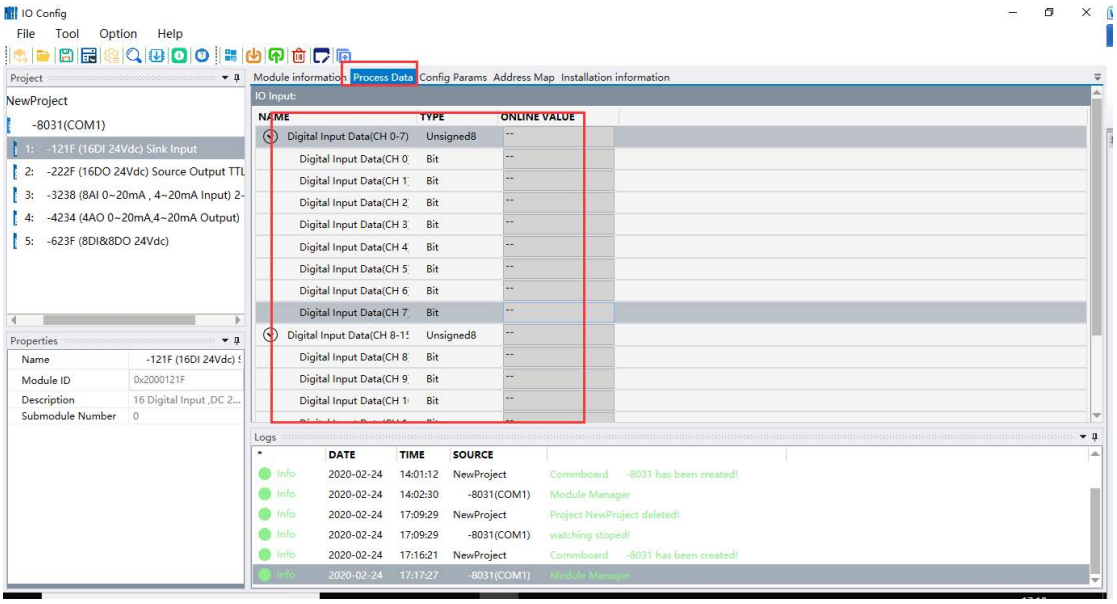

In Configuration Parameters interface, the configuration parameters and communication parameters of the adapter module cdoul be set. Configuration parameters of IO module could be set.

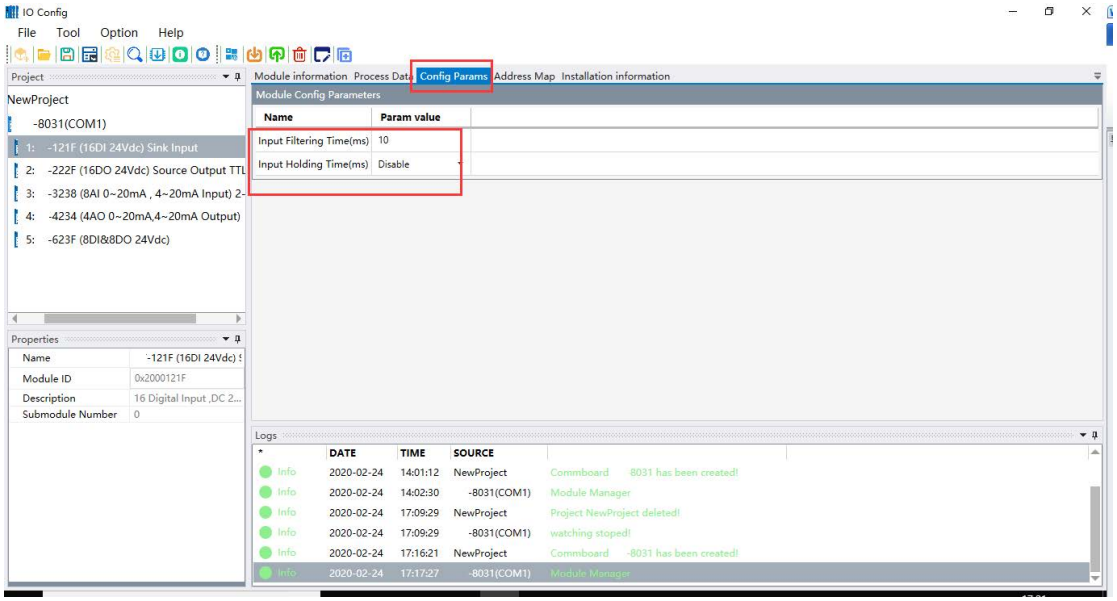

In the Address Map interface, you can view the channel address of the IO module. Click the address table save button or the shortcut "Ctrl M" to export the address table.

And address table format is TXT or XLS.

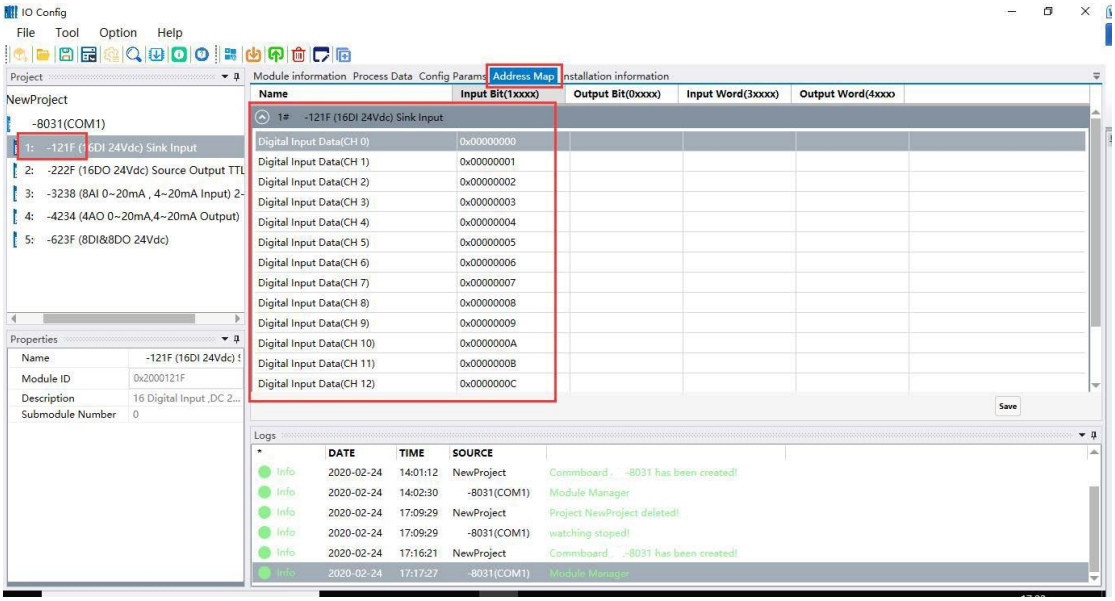

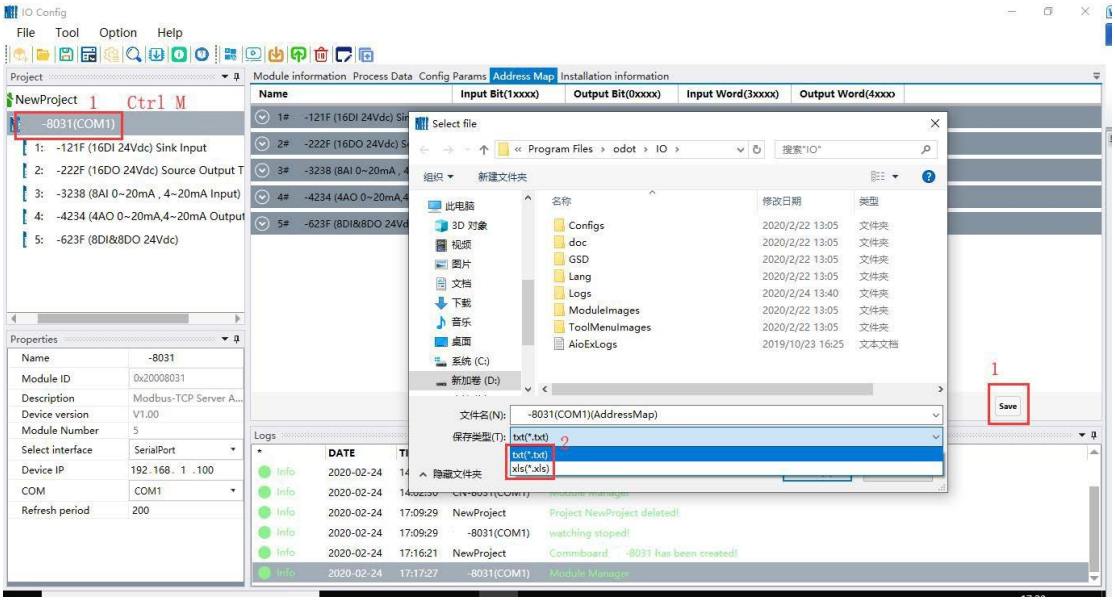

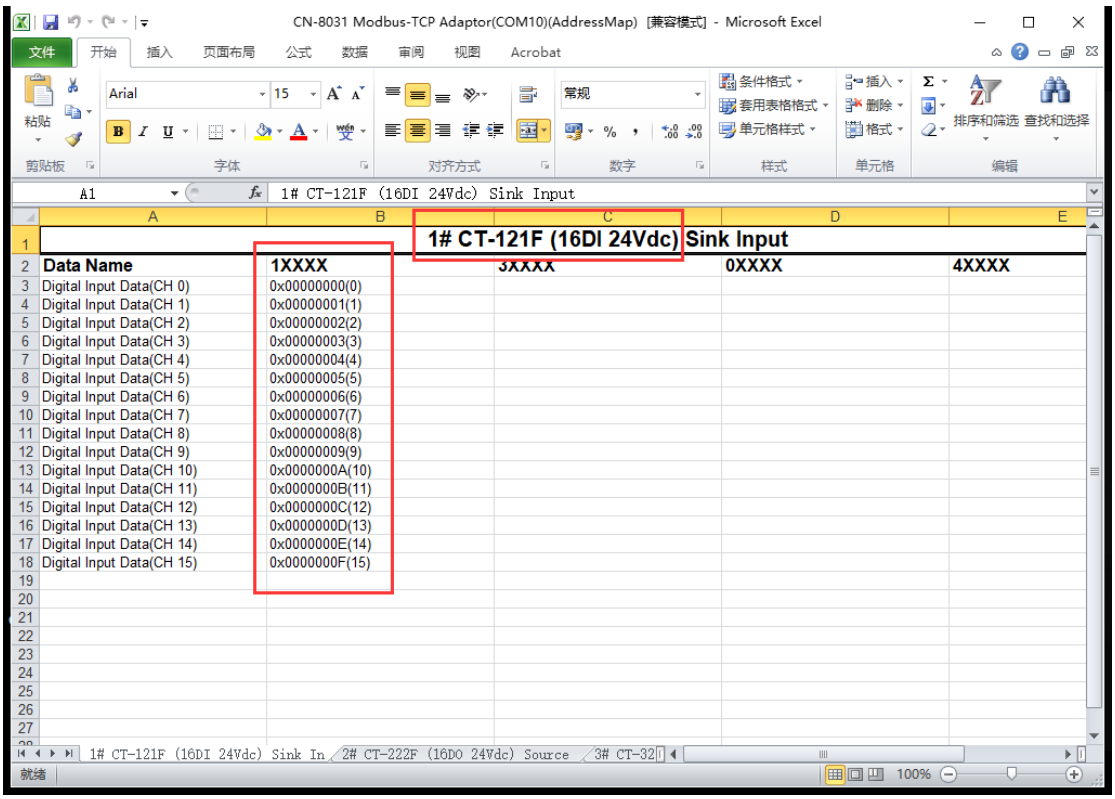

In the Installation Information interface, you can check the current, size and other parameters of the module.

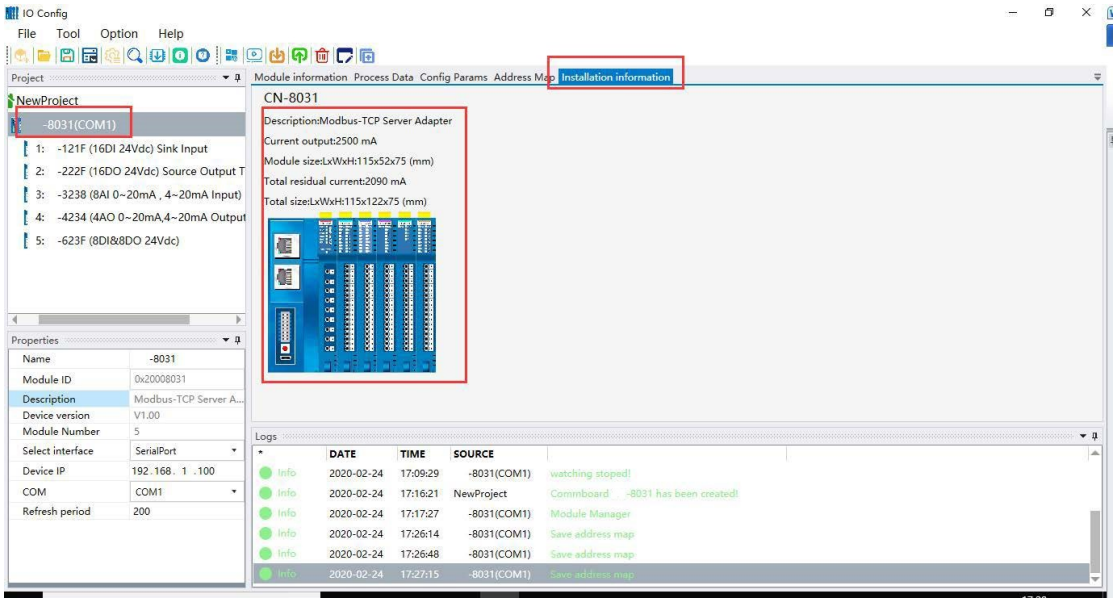

3 Online configurations

Supplying 24V power to the module, and connect the module to the computer with Micro USB or network cable (Micro USB cable needs to install a driver and the COM port will be automatically assigned after the driver installation, such as COM3).

1. After installing IO Config software, open the configuration software, and click File→Project→New Project in the menu bar , or click shortcut of New Project, or right-click Project→New Project in the project menu bar, and manually fill in the project name.

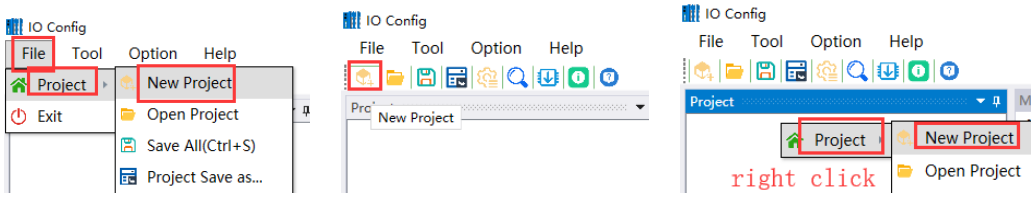

2. n the Property bar, modify the upload interface by selecting serial port and the serial port number is COM10, or modify the upload interface to select Ethernet. The device IP address: 192.168.1.100 (MODBUS TCP communication only). Right-click Project Name→Upload IO Modules, and the IO module will be automatically scanned in the project menu.

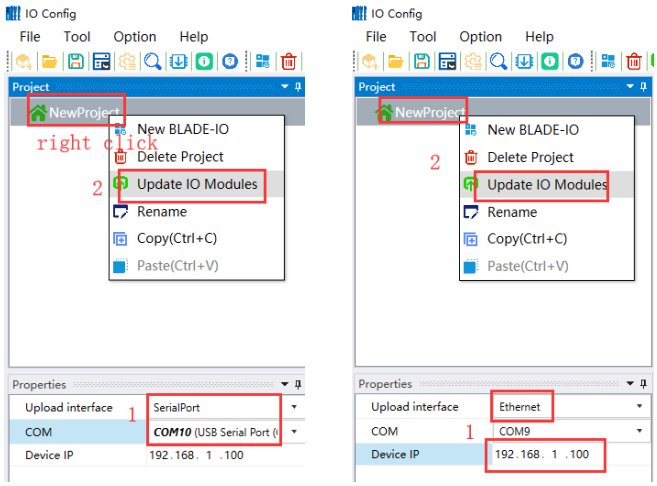

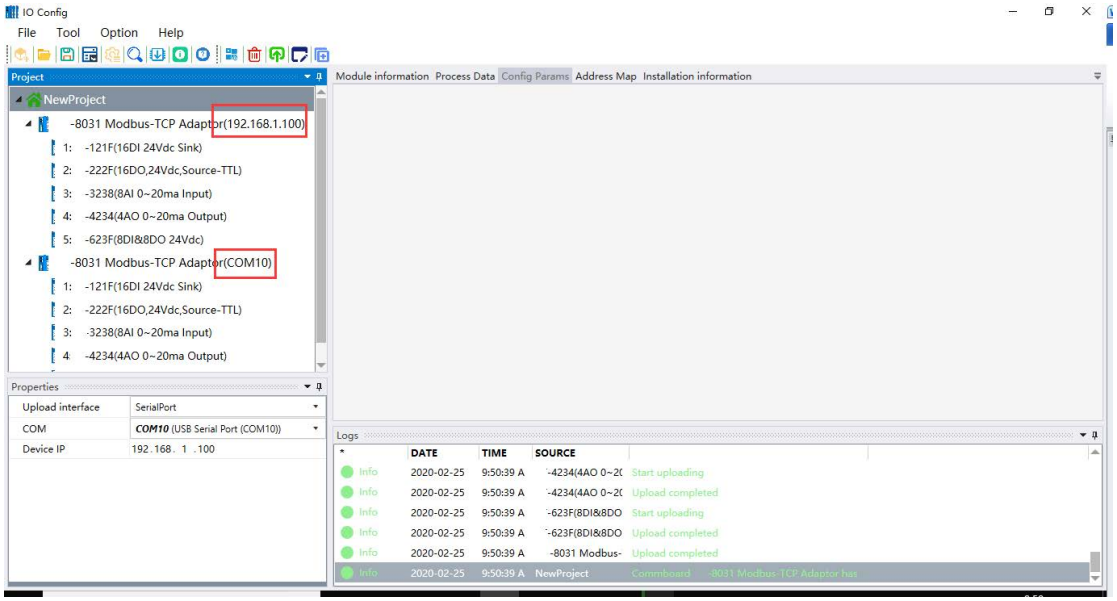

When the adapter module is ND-8031 (MODBUS TCP communication), clicking Tool to search device or click shortcut  to search device, and selecting the Local Network Card in the pop-up interface, then clicking Search Device, and all adapter modules in the network structure will be scanned in the device list. In this interface it could view paramters such as version of adapter hardware and software, IP address and so on. When there are multiple adapters in the network, it supports the function of "Light Up" to find the device, "Download" to modify the adapter IP address and "Restart". When firmwares need to be upgraded, click "Upgrade" to enter the upgrade interface.

Clicking "Upload" and all IO modules will be uploaded automatically in the project menu.

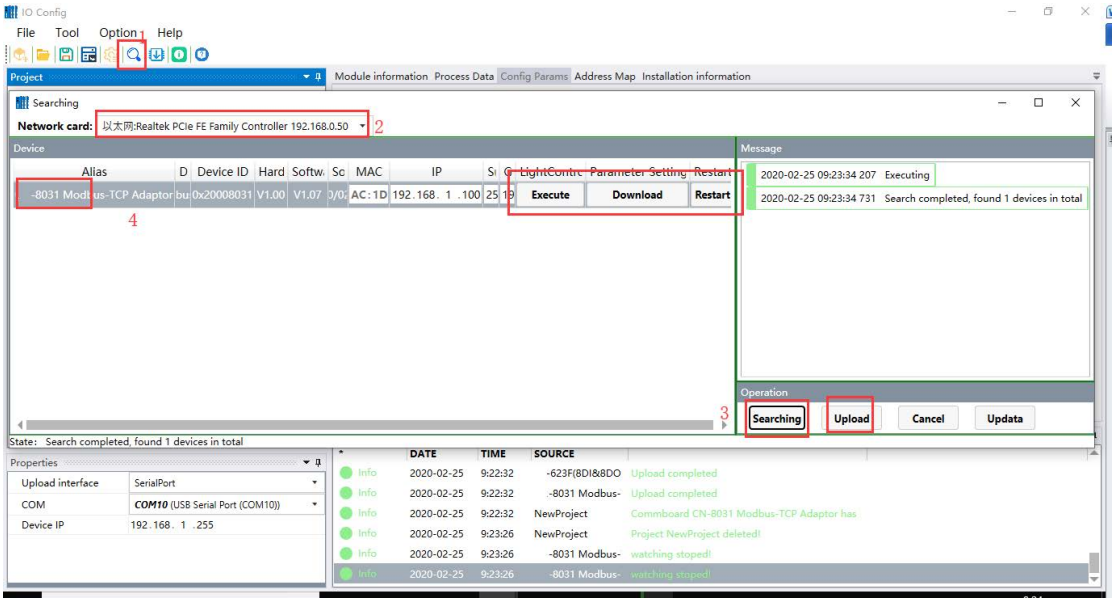

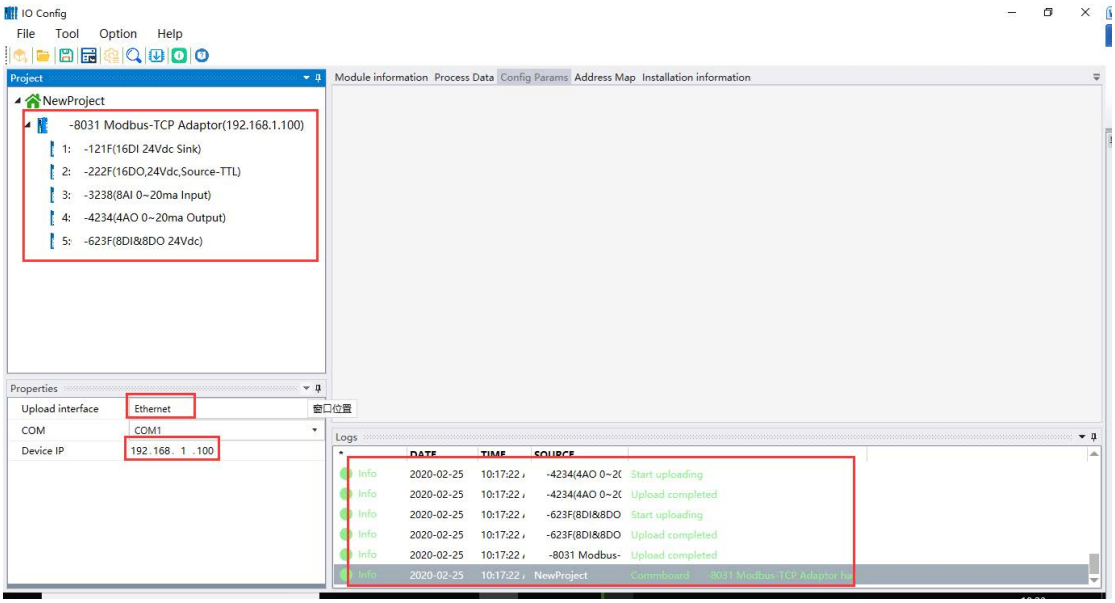

For the digital input module, you can manually add the counting sub-module.

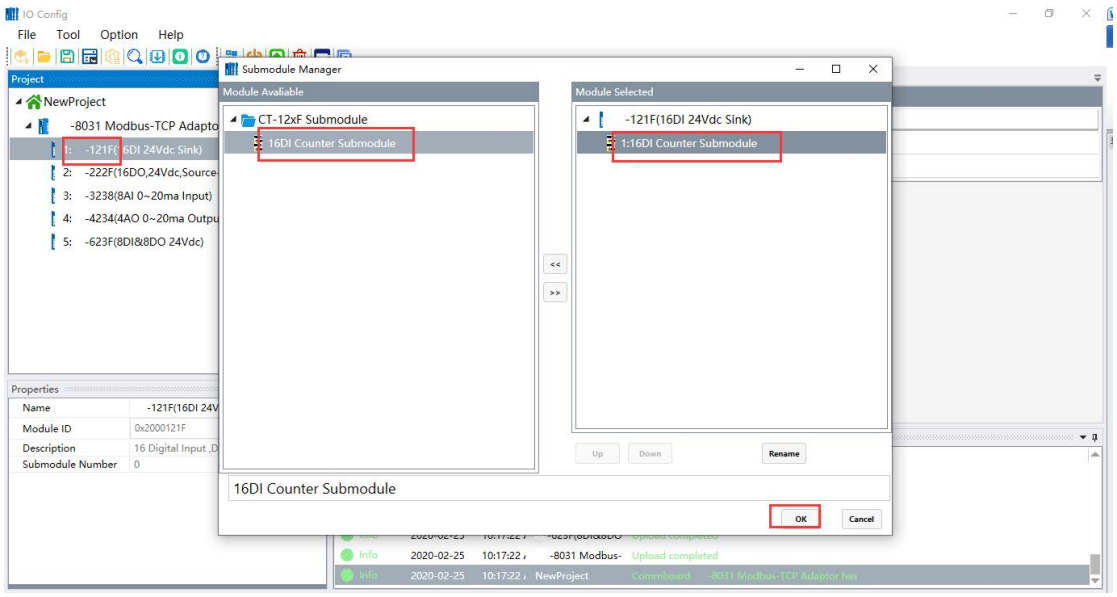

After adding a sub-module, you must right-click to download the module configuration or right-click ND-8031 to download IO parameters. Otherwise, if clicking directly online and it will result in an error in the state menu of "the number of sub-module does not match the total number of configuration sub-module".

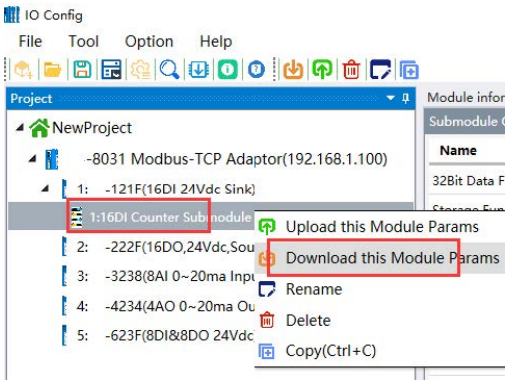

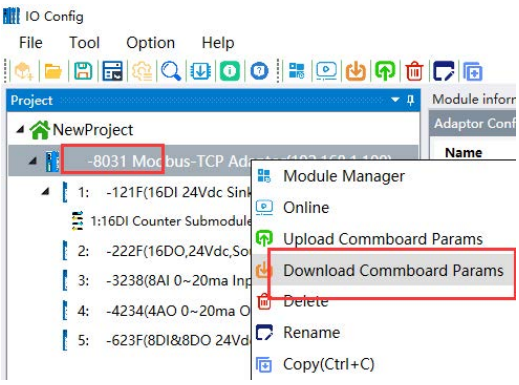

3. ight-click the adapter module ND-8031 and clicking online. It could monitor the IO module data online.

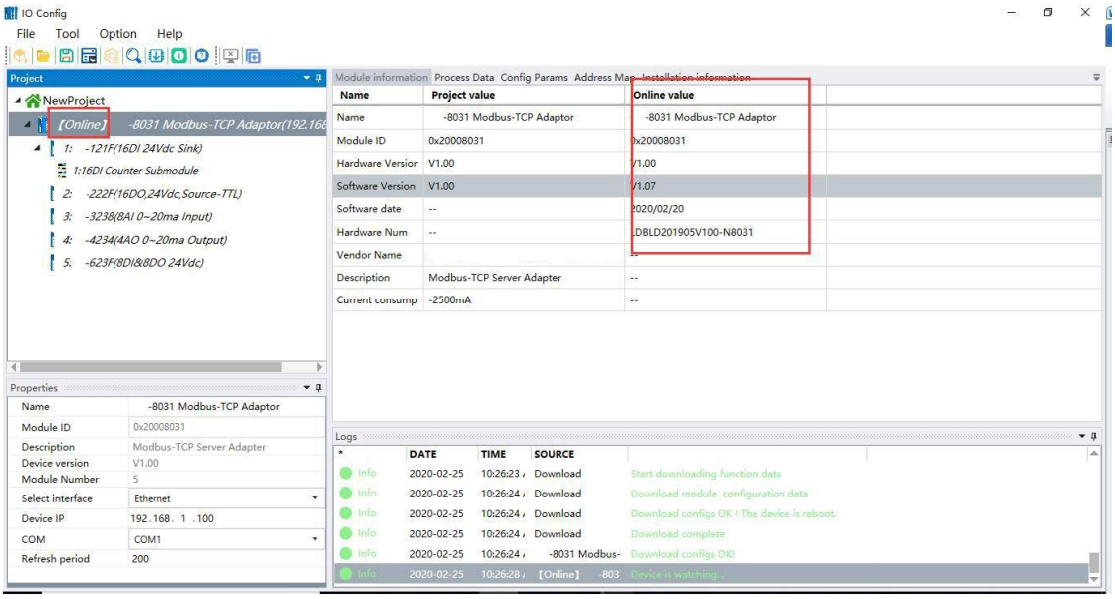

Example: NT-121F in slot 1, the external power 24VDC is supplied to the DI0 of NT-121F. And in the process data interface, the CH0 monitoring value is 1.

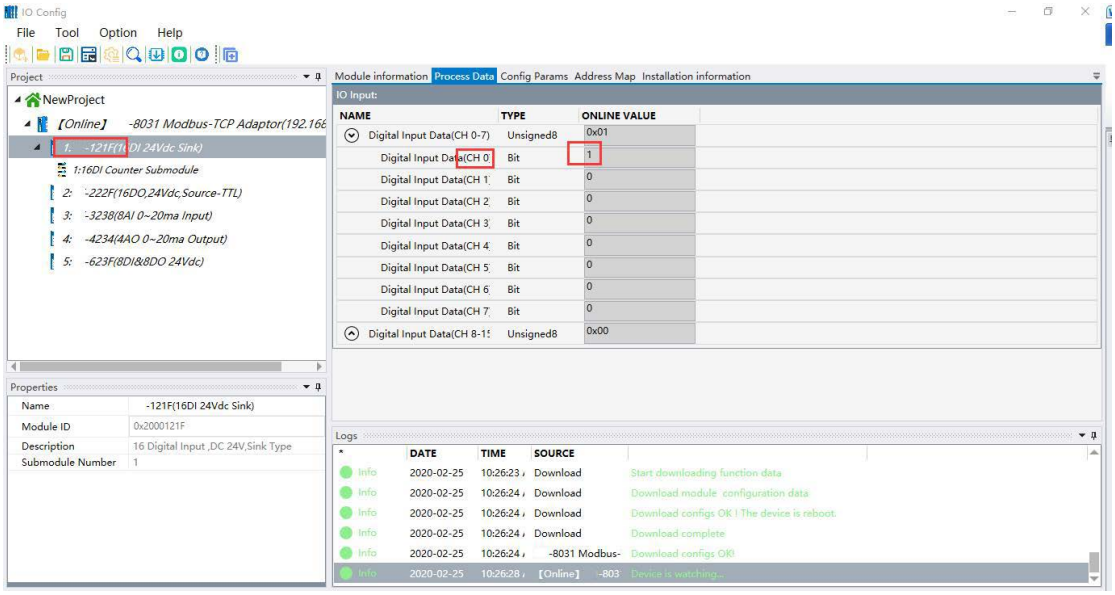

Example: Assigning the CH0 channel of NT-4234 in slot 4 to 16#7530= 30000, and connect it to the CH0 channel of NT-3238 in slot 3 at the same time.The CH0 of NT-3238 monitoring value is 16#3125.

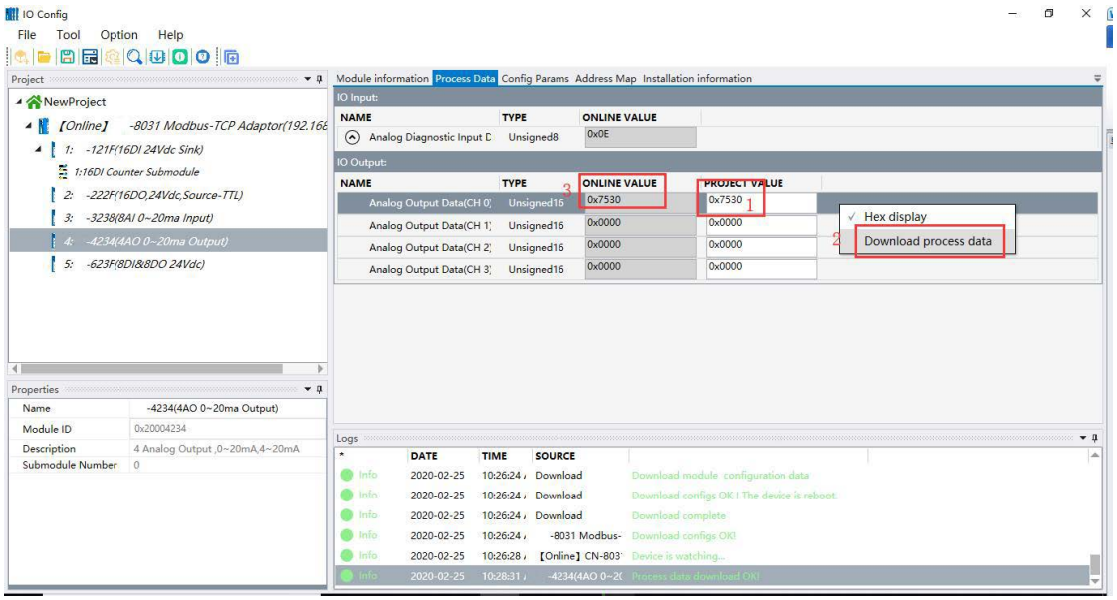

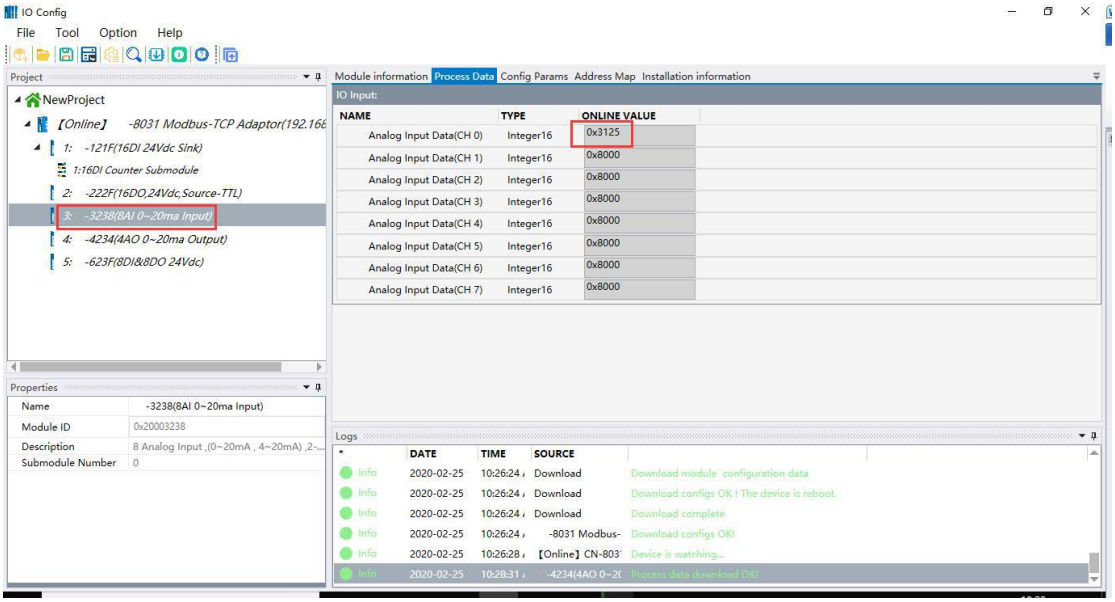

4. onfiguration parameters can be modified in the configuration interface.

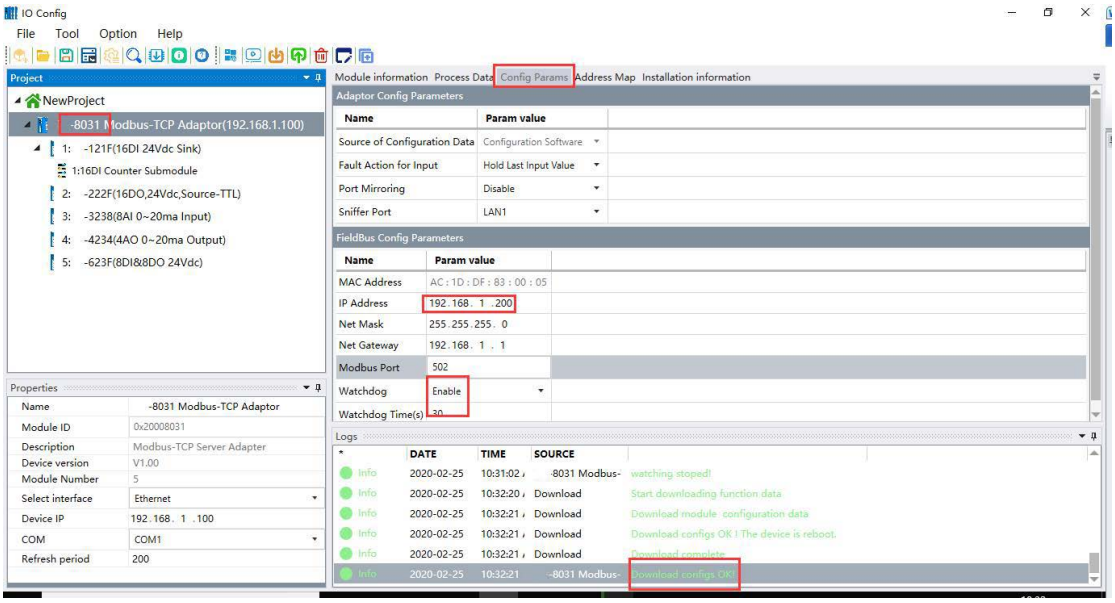

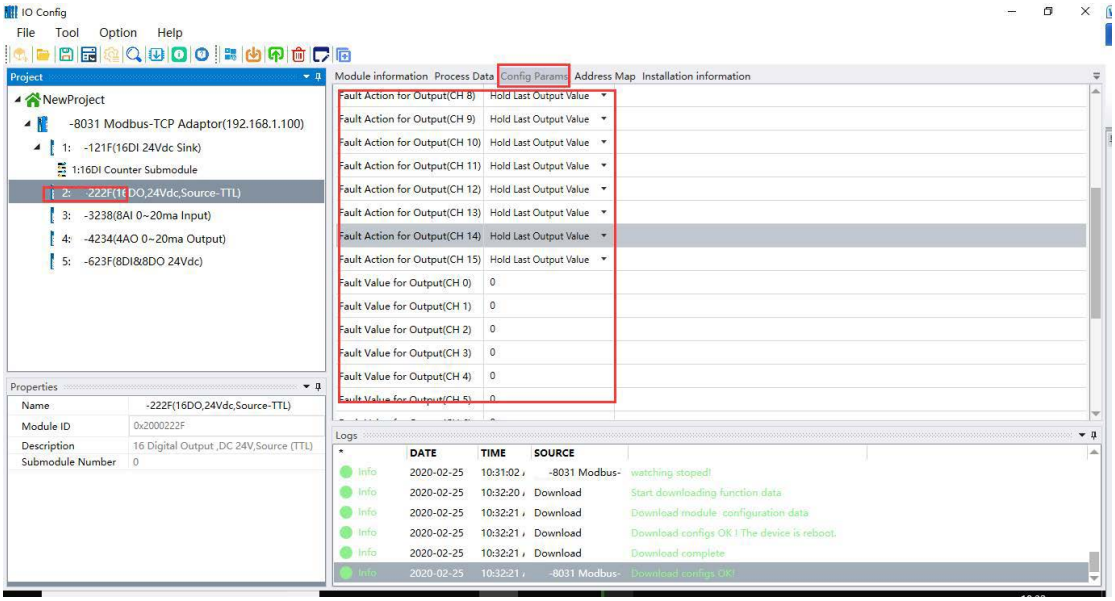

After the parameters are changed, you can right-click on ND-8031-Download IO Parameters in the project bar. So the configuration parameters of the adapter and IO module could be modified.

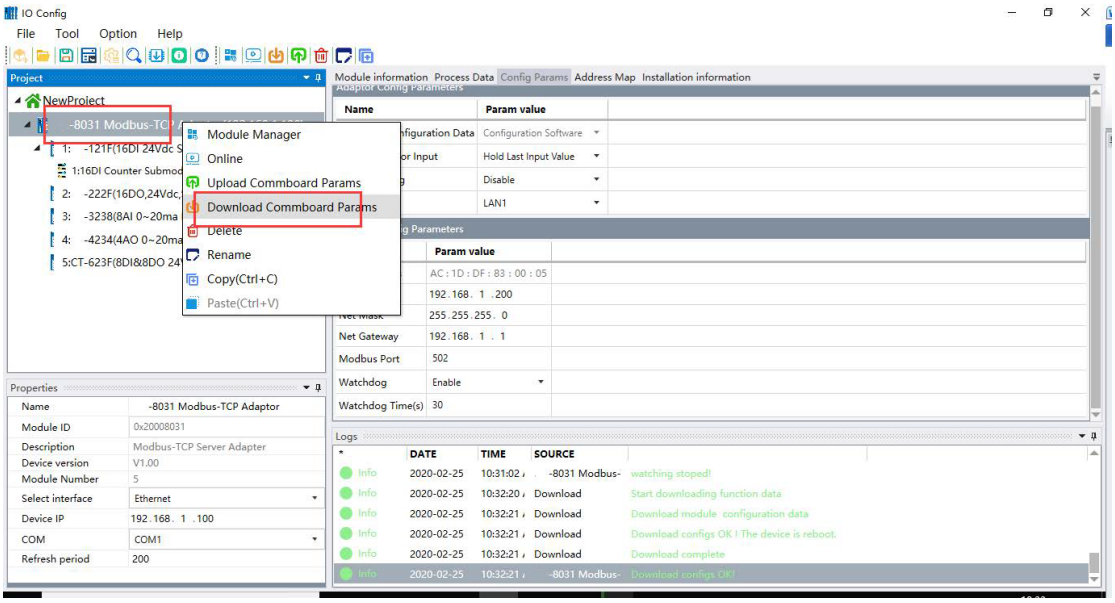

After all parameters are modified, select ND-8031 and click the shortcut key "Ctrl S" to save the configuration project.

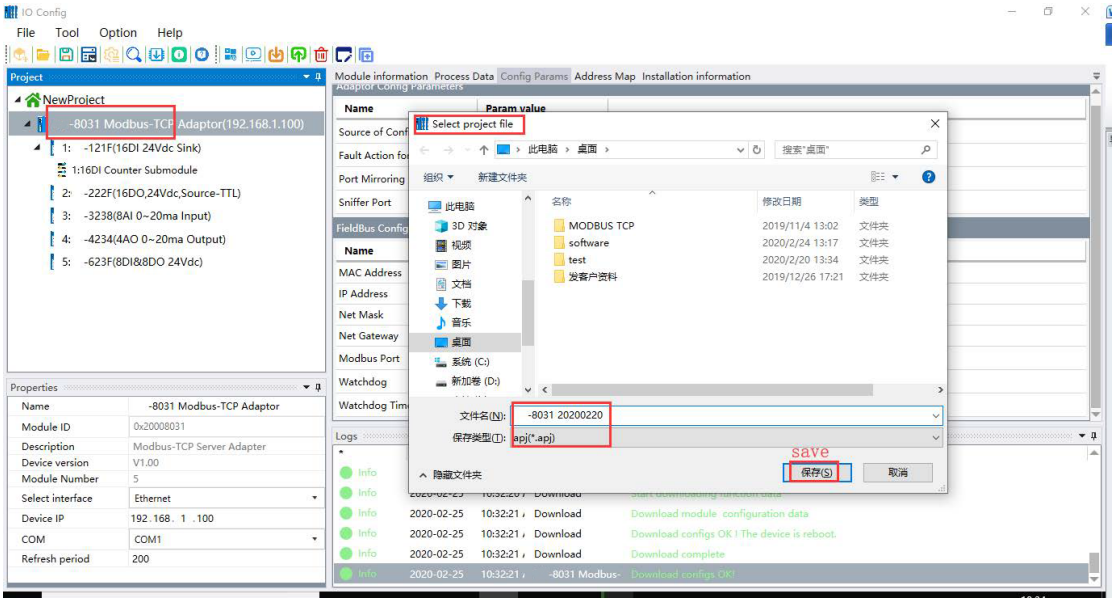

4 Update device library files

Update device library file is used to update the newly added IO module of software. When a new IO module is released, the customer can import the IO module into the configuration software by only updating the device library file, so there is no need to reinstall the configuration software.

First, copy and paste the latest version of the device library file of BLADE-IO-CONFIG-HSP-20200213 into the GSD folder of the software installation directory.

Second, click Option-Configuration or shortcut key in the menu bar. And in the pop-up window, please find the new library file (.oml) under the 'Path config', and click open to complete the update of the device library File.

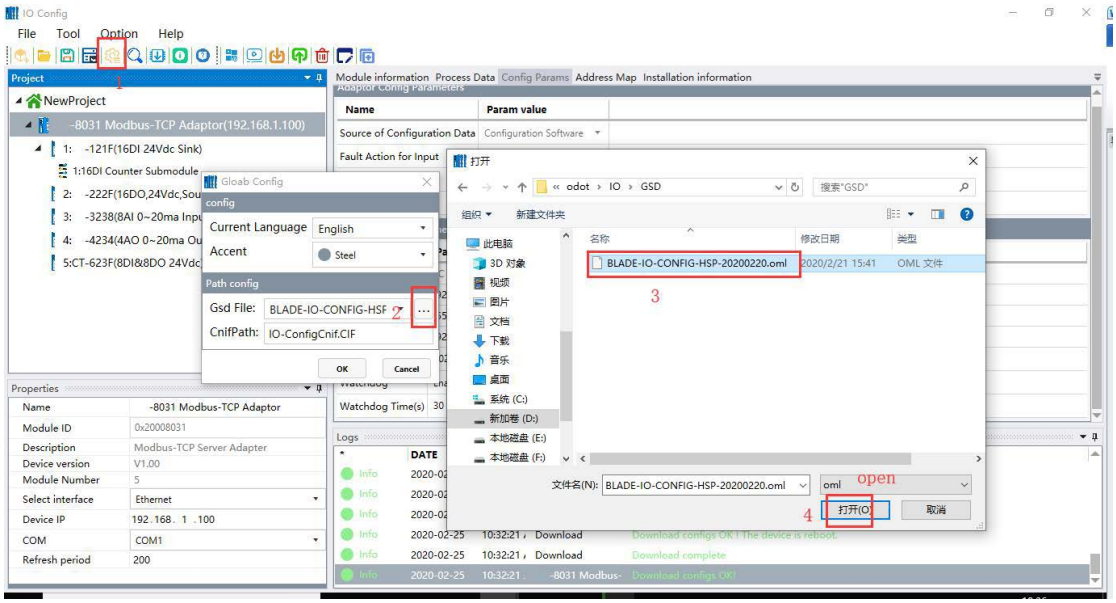

5 Device firmware upgrades

In IO Config software, clicking Tool→Online upgrade or shortcut and in the pop-up window, selecting "Serial Port" (Ethernet could be selected for MODBUS TCP communication) and the serial port number is "COM10". Click "read Info" to view the

version information of the current adapter or IO module.

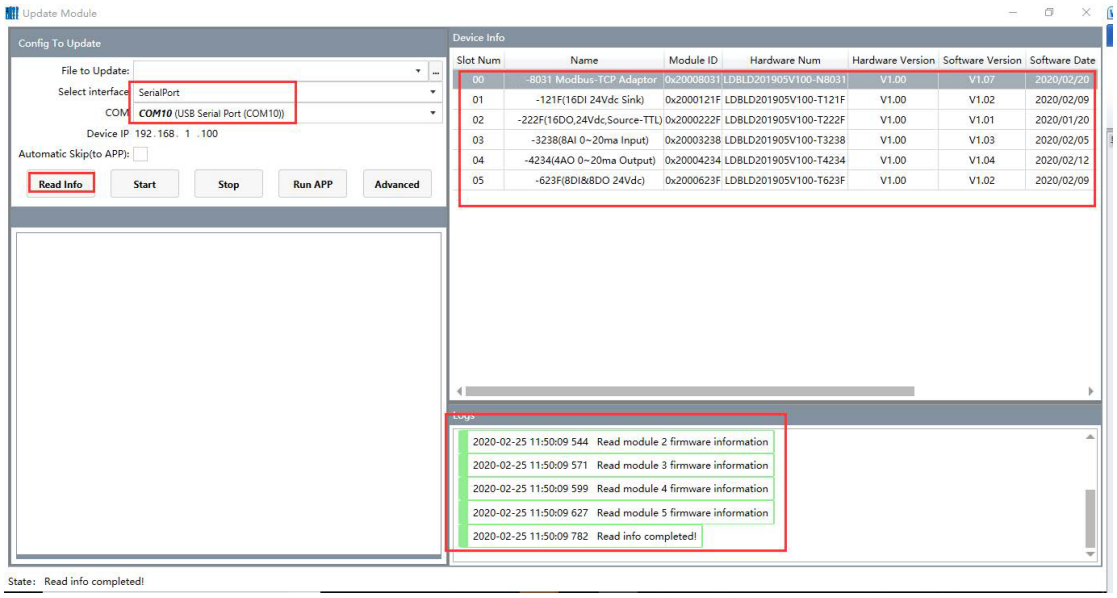

Click the right side ... of the upgrade file, and select the upgrade file (.ofd) of the analog output module NT-4234 in the pop-up window, and open it.

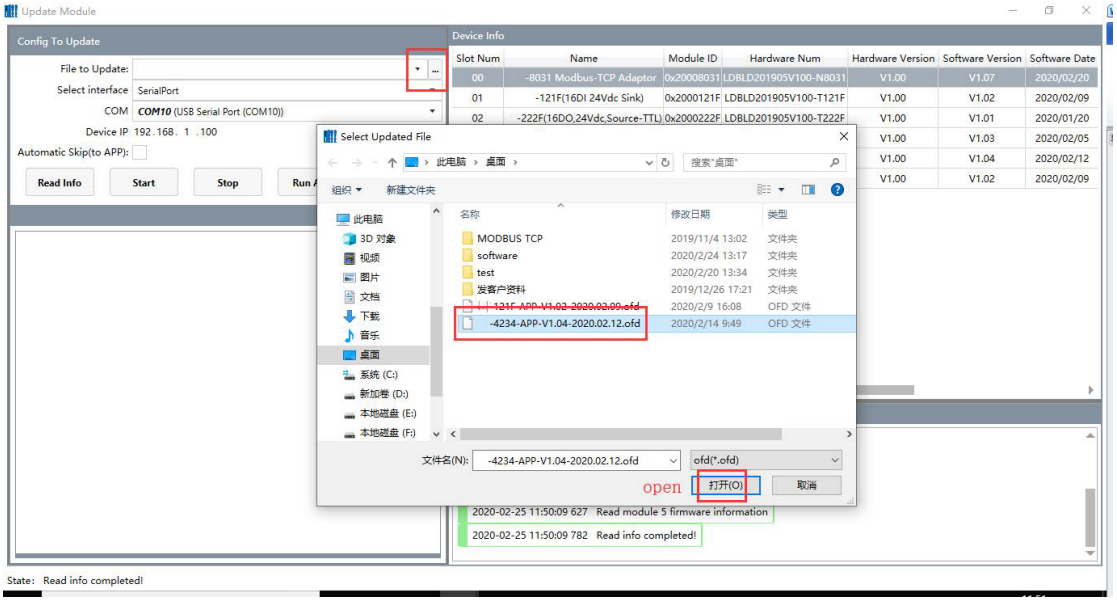

The upgrade version and other information could be viewed in the lower left side of the upgrade menu. And there is no upgrade for the currently firmware version so no need for upgrading. If the version information is inconsistent, please select the slot where the module is located(marking√) and click to start the upgrade.

Note: if the hardware version displayed on the lower left side of the menu is IO module,

and it needs to select the slot where the module is located(marking√) and click to start the upgrade.

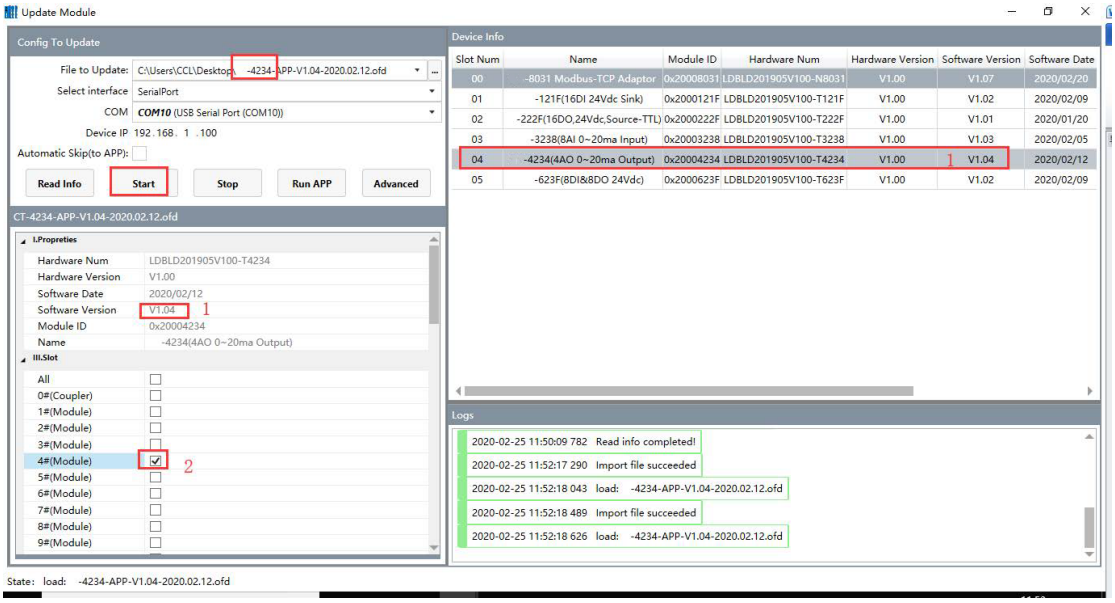

Please note when upgrading: just click to Start for the upgrade, after the upgrade is completed, and it requires to enter APP mode, so it needs to manually click "run APP" or power up the device again.

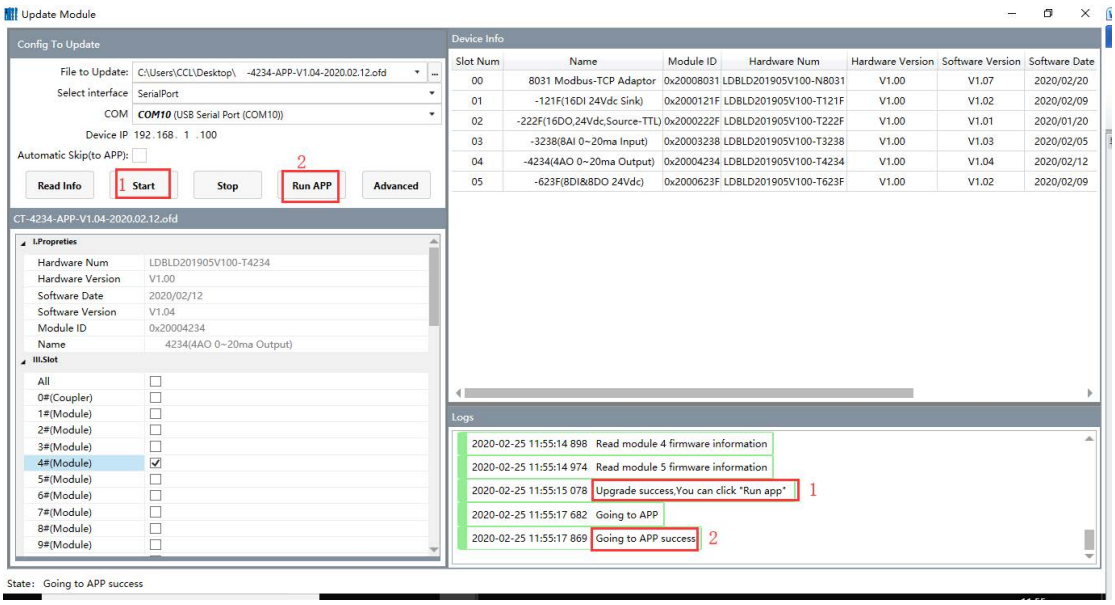

If it only needs to upgrade firmware of one module, you can select Automatic Skip (to APP), and click Start for upgrade, then the APP will run automatically when the

upgrade is completed. If it needs to upgrade the firmware of multiple modules, please do not select Automatic Skip (to APP). Clicking Run APP after all the modules upgrade is finished.

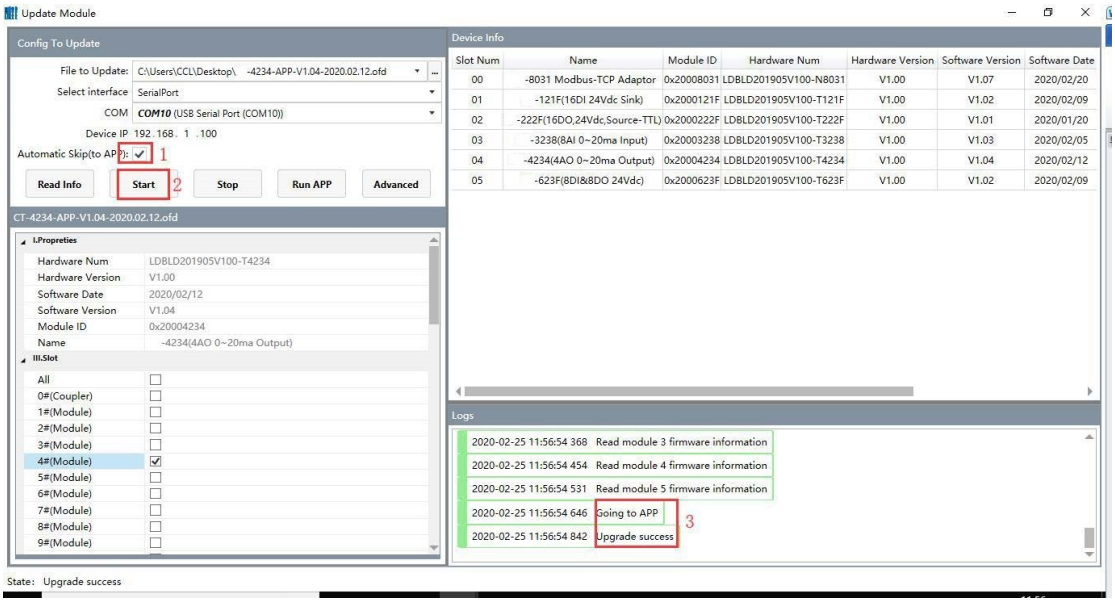

NEO WAVE®

Despite all attempts to guarantee accuracy in this specification,Neo Wave cannot be held liable for any damage injury, loss, or expense due to errors or omissions. Product specification and design might change without prior notice in pursuit of technical enhancements.

For technical support please contact: support@neowave.tech

www.neowave.tech